Frankfurt University
of Applied Sciences

– Faculty of Computer Science and Engineering –

Assessment of Grid-Forming Inverter Impact on Dynamic Stability and System Strength in Converter-Dominated Power Systems

Thesis submitted in order to obtain the academic degree

Master of Engineering (M. Eng.)

submitted on 01. May 2026 on

Mario Alberto Tavera Leon

Student ID: 1501319

First Supervisor	:	Prof. Dr.-Ing. Carolina Tranchita Rativa
Second Supervisor	:	Prof. Dr. Ing Sebastian Schäfer

Non-Disclosure Notice

This scientific thesis contains information of the company Rheinisch-Westfälisches Elektrizitätswerk AG. The disclosure or unauthorized use of this thesis as a whole or in parts is prohibited. The prohibition shall only apply to information pertaining to the company Rheinisch-Westfälisches Elektrizitätswerk AG. Any other exceptions require the written consent of Rheinisch-Westfälisches Elektrizitätswerk AG.

Declaration

Hereby I assure that I have written the presented thesis independently and without any third party help and that I have not used any other tools or resources than the ones mentioned/referred to in the thesis.

Any parts of the thesis that have been taken from other published or yet unpublished works in terms of their wording or meaning are thoroughly marked with an indication of the source.

All figures in this thesis have been drawn by myself or are clearly attributed with a reference.

This work has not been published or presented to any other examination authority before. I am aware of the importance of the affidavit and the consequences under examination law as well as the criminal consequences of an incorrect or incomplete affidavit.

Frankfurt, 01. May 2026

Your Signature

Mario Alberto Tavera Leon

Contents

1 Introduction **2**

2 Literature Review **4**

2.1 Inverter-Based Resources (IBR): GFL vs GFM . . . 4

2.1.1 Grid Following Inverters . . . 5

2.1.2 Grid Forming Inverters . . . 7

2.2 GFM Control Methods . . . 9

2.2.1 Droop Control . . . 9

2.2.2 Virtual Synchronous Machine . . . 9

2.2.3 Virtual Oscillator Control . . . 11

2.3 Grid Forming Capanilities . . . 12

2.4 Power System Stability and Resilience . . . 12

2.5 Frequency and Voltage Stability Indicators . . . 12

2.6 Grid Strength and Short-Circuit Ratio . . . 12

2.7 Real World Examples . . . 12

2.8 Conventional Stability Support . . . 12

2.9 Research Gap and Motivation . . . 12

2.10 German Energy Market . . . 12

2.11 Grid Stability . . . 13

2.12 Ancillary Services . . . 13

3 Objectives **14**

3.1 Research Question . . . 14

3.2 Scenarios . . . 14

4 Developed Method **15**

4.1 Method . . . 15

5 Evaluation der Methode **16**

6 Ergebnisse **17**

7 Zusammenfassung und Ausblick **18**

A Programmcode **19**

Bibliography **22**

Abstract

This is the abstract of the document, here the abstract will be provided
This is just a try to observe how does the document is being done

Chapter 1

Introduction

The global energy transition is driving society toward cleaner and more sustainable ways of producing electricity. This transformation has accelerated the deployment of renewable energy sources, most of which are connected to the grid through power electronic converters, commonly referred to as Inverter Based Resources (IBRs). Unlike conventional synchronous machines, IBRs lack the natural inertia and damping that arise from the big rotating masses of generators. As synchronous units are progressively being decommissioned, the power system experiences reduced inertia and weaker frequency stability. This shift towards power systems with high penetration of IBRs creates new challenges in maintaining dynamic stability, especially under large disturbances.

IBRs can be broadly categorized into Grid-Following (GFL) and Grid-Forming (GFM) inverters. Grid-Following inverters operate as controlled current sources that inject current based on an externally measured grid voltage. In contrast, Grid-Forming inverters behave as controlled voltage sources, capable of establishing their own voltage and frequency references. This fundamental difference enables GFM inverters to provide advanced functionalities such as islanded operation, black-start capability, and voltage and frequency support during disturbances. As a result, they are seen as a promising solution to enhance the stability of low-inertia systems. Among the technologies capable of providing GFM capability, Battery Energy Storage Systems (BESS) are particularly attractive. Their fast response and bidirectional power flow make them suitable for supporting the grid during transients while participating in energy arbitrage and ancillary service markets. As energy markets evolve to value flexibility and stability, understanding how BESS equipped with GFM control can contribute technically and economically becomes crucial. For RWE, many assets are connected at distribution system level, where the interaction between multiple IBRs and the grid can be complex. However, manufacturers often protect the internal control algorithms of their inverters, limiting transparency and making it challenging for developers to predict system behavior.

Therefore, it is important to understand how GFM parameters—such as virtual inertia, damping, and droop coefficients—affect system performance, and how these can be interpreted from available manufacturer data sheets to ensure appropriate equipment selection and sizing. This thesis aims to analyze the impact of Grid-Forming parameters on system stability under large disturbances using PowerFactory simulations at the distribution network level. Different park configurations—including standalone BESS and hybrid renewable plants—will be evaluated to determine the minimum share of GFM capacity required to ensure stable operation. The study focuses on system-level behavior and parameter sensitivity, not on designing or modifying inverter control loops. By doing so, it supports RWE in developing internal capability to assess GFM behavior and translate manufacturer information into actionable technical requirements. Managing the stability of future power systems requires addressing the growing share of generation from nontraditional sources, including renewable technologies such as solar or wind and energy storage systems like batteries. These resources not only exhibit variability due to their weather-dependent energy inputs but also span a wide range of capacities—from small residential rooftop installations of a few kilowatts to large utility-scale plants reaching hundreds or even thousands of megawatts. Moreover, they are integrated across multiple grid levels, connecting both within distribution networks and directly to high-voltage transmission systems.

The operation of future power networks must integrate both the inherent dynamics and control responses of traditional large-scale synchronous machines and those of emerging inverter-based generation technologies.

The thesis provides a quantitative estimate of the minimum GFM share required for acceptable dynamic performance across different grid strengths, it also provide

Chapter 2

Literature Review

2.1 Inverter-Based Resources (IBR): GFL vs GFM

As a result of the increasing demand in power systems for renewable energy technologies, inverter-based resources (IBRs) are becoming a relevant component of AC power systems. Typically, Distributed Energy Resources (DERs) produce electricity as Direct Current (DC); therefore, an inverter is required to transform the waveform into Alternating Current (AC). The inverter thus acts as the interface between DERs and the electric grid.

Due to the natural intermittency of renewable energies such as wind and solar, extracting the maximum available energy at any time has been a major objective in the integration of these assets. However, these assets are not able to provide inertia, unlike the large rotating masses of synchronous generators. Consequently, the reduction in mechanical inertia from synchronous machines has become a topic of concern for grid operators. This reduction results in larger frequency swings when the system experiences disturbances, such as load variations. These events can consequently trip loads or inverter-based units, thereby increasing reliability issues for the power system [5]

The primary objective of IBRs is to supply active and reactive power to the grid; however, depending on their interaction with the grid, their behavior under disturbances, and the controller implementation, IBRs can be classified into two major groups: grid-following (GFL) and grid-forming (GFM) inverters.[7]

From an economic point of view, it is generally more attractive to install GFL inverters, since the main goal is to sell as much available energy as possible to the grid. GFL inverters can maximize energy production through algorithms such as Maximum Power Point Tracking (MPPT). Nevertheless, as the share of this type of inverter increases within the power system, voltage and frequency regulation become a challenge. To address this, grid operators have imposed requirements for inverters to support the grid by injecting reactive power and by adjusting their active power output in response to grid variations.

As an illustrative example, [3] discusses reactive power (Q) support. Whenever a voltage deviation occurs, the IBR should be able to detect and respond accordingly. In the case of a voltage decrease, the inverter must supply reactive power according to a predefined droop setting; conversely, for a voltage increase, the inverter should absorb (supply negative) reactive power.

As previously discussed, the main function of a Grid-Following (GFL) inverter is to inject active and reactive power into the grid. The distinction between GFL and Grid-Forming (GFM) inverters lies not only in the manner in which these inverters deliver active and reactive power (P,Q), but also in their fundamental control objectives. While GFL inverters rely on the existing grid to define voltage and frequency, GFM inverters actively regulate these parameters, establishing and maintaining the grid's voltage and frequency reference.

The main distinction between Grid-Following (GFL) and Grid-Forming (GFM) inverters lies in their underlying control principles and the way they interact with the grid.

Overall, both GFM and GFL inverters share similar grid-support and power-generation objectives during grid-connected operation. These objectives are achieved either through active and reactive power adjustments in the case of GFL control,

or through voltage and frequency regulation in the case of GFM control [9]

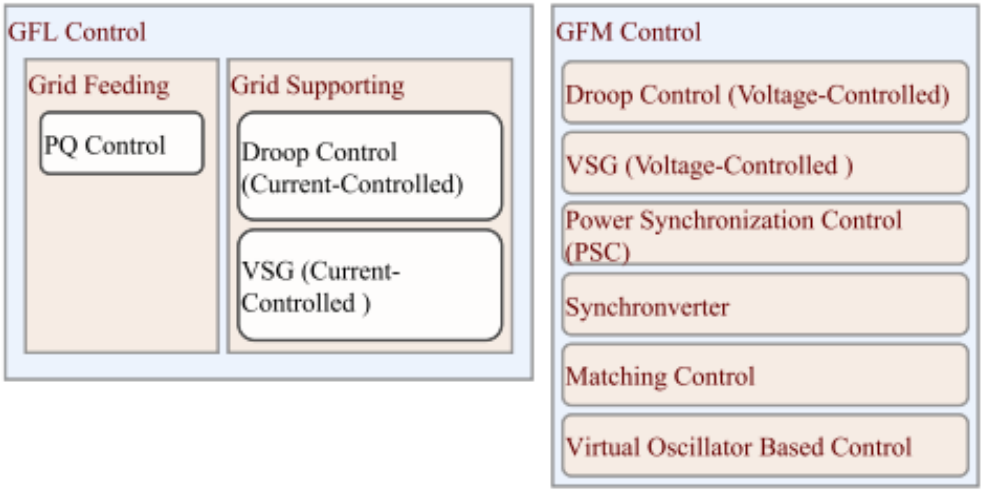

Figure 2.1: fig: Grid Connected Converter Classification: GFL and GFM Control [10]

2.1.1 Grid Following Inverters

A fundamental challenge in low-inertia power systems is that most existing inverter controllers are equipped with GFL control. This type of control is designed under the assumption that inertial sources, such as synchronous generators or grid-forming inverters, regulate the voltage and frequency of the grid. [2]. Another challenge arises because large PV plants or onshore wind farms are often located far from consumption centers; consequently, long transmission lines are required. As a result, the grid impedance "seen" from the IBR side tends to be high, and such areas are commonly referred to as weak parts of the grid. In these sections, maintaining voltage regulation through conventional methods becomes difficult.

Currently, the majority of PV inverters connected to the grid operate as grid-following (GFL) inverters. This type of inverter adjusts its power output by synchronizing with the grid through a Phase-Locked Loop (PLL). The PLL works by continuously measuring the angle and frequency of the grid voltage. [5].

The synchronization of a GFL inverter is achieved through a Phase-Locked Loop (PLL). In this configuration, the inverter behaves as a current source, injecting current into the existing grid voltage. From a control perspective, a GFL inverter can be modeled as a controlled current source connected in parallel with a high impedance. The inverter measures the voltage at the Point of Common Coupling (PCC), v_{PCC} , using the PLL. This signal is then transformed via the Clarke and Park Transformation into the direct and quadrature (dq) components. The power control sets the desired dq currents required to inject the desired Active and Reactive Power. The Current Control source model is shown in Fig 2.1. C_p denotes the outer power control loop and θ represents the phase angle. Under the GFL operation, only current magnitude and phase angle in the output current are adjusted to achieve the desired active/reactive power outputs. The current source frequency remains identical to the grid frequency.

The Grid-Following (GFL) control strategy operates by delivering the commanded active P_{ref} and reactive Q_{ref} power based on the grid measurements provided by the PLL. The power control block calculates the reference currents, which are expressed in the dq-frame and regulated by a fast inner current-control loop that ensures the inverter output current follows its reference accurately. In this way, the inverter can be represented as a controlled current source connected to the grid at the PCC through the grid impedance, depending on the existing grid voltage to maintain synchronization and power delivery. During large disturbances, the GFL inverter detects changes through voltage and current measurements, which inherently introduce delays in the provision of active and reactive power support. From a small-signal stability

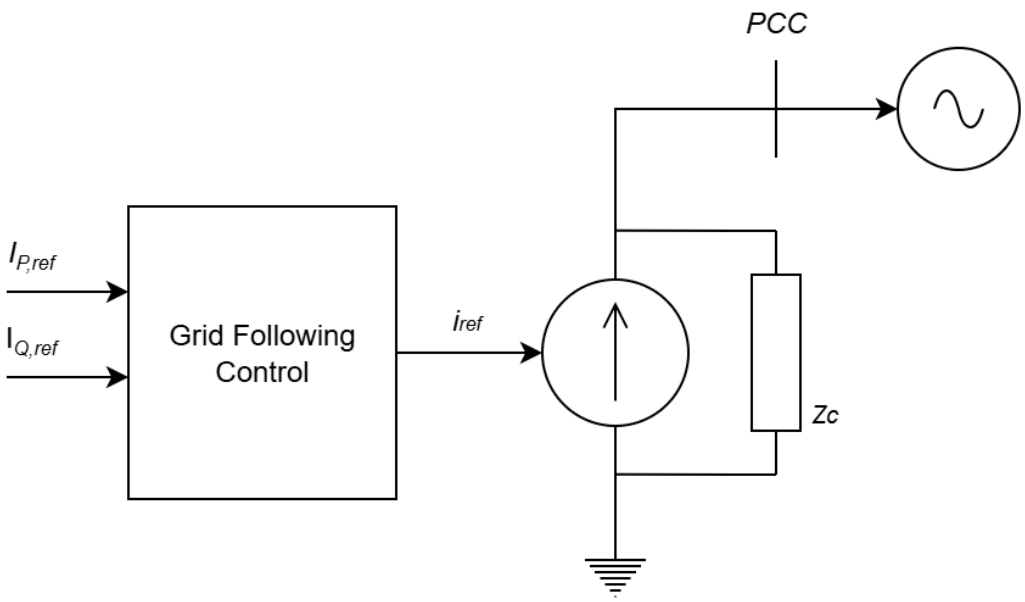

Figure 2.2: fig:Grid Following Inverter Control Structure [12]

perspective, since the GFL inverter relies on the PLL for grid voltage and angle measurements, its stability margin can be significantly reduced under sudden grid variations.[7]

Next, the detailed control blocks of the Grid-Following Inverter is presented. The measured grid current is denoted by $I(f)$ The inverter output voltage is represented by U_{out}, and θ denotes the phase angle of the grid voltage. After the inverter is synchoniyed within the grid, the control references are then sent to the control blocks to achieve the desired performance. The GFL inverter, aside from its capability to provide limited grid support, is primarily designed for efficient power conversion, enabling it to deliver high-quality power to the grid under normal grid operating conditions. Beyond these limits, the GFL inverter must be disconnected. [9]

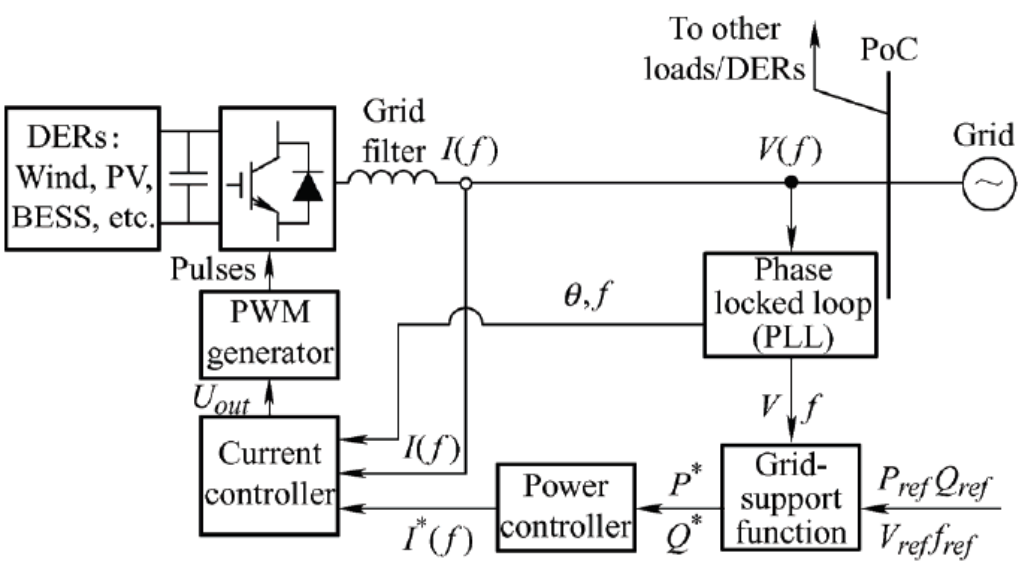

Figure 2.3: fig:Grid Following Inverter Detailes Control Blocks [9]

2.1.2 Grid Forming Inverters

To address the increasing share of Grid-Following (GFL) inverters in power systems, the concept of Grid-Forming (GFM) control was introduced. This approach aims to enable one or more inverters to operate as voltage and frequency regulators, capable of forming a local power grid. Unlike GFL inverters, GFM control does not rely on a Phase-Locked Loop (PLL) for synchronization. Instead, GFM inverters can self-synchronize with the grid by generating their own voltage and frequency references. [4]

GFL inverters depend on a PLL to align with the existing grid, whereas GFMs autonomously establish their voltage and frequency setpoints. This capability enhances grid stability and support functions. GFM converters operate as voltage sources that internally generate their own voltage and frequency references. By emulating the inertia and damping characteristics of synchronous machines, GFM controllers provide improved frequency and voltage support. These features make them particularly robust in weak-grid, islanded, and high-renewable environments, where fast and adaptive control is crucial. Overall, GFMs demonstrate greater independence, stability, and flexibility under varying grid conditions, positioning them as a key enabling technology for future power systems with high renewable penetration. [12]

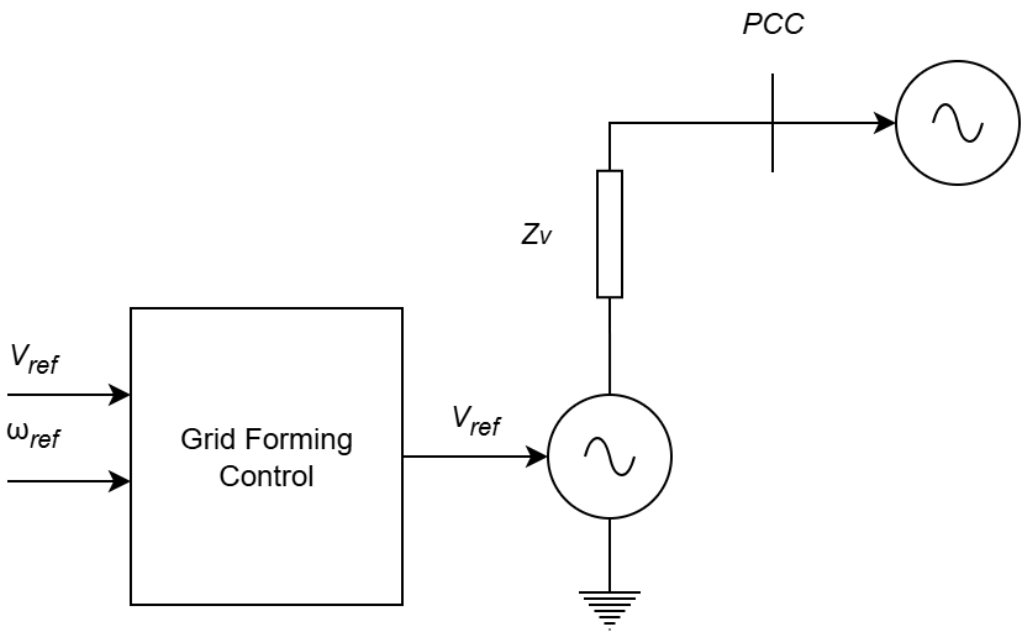

Figure 2.4: fig:Grid Forming Inverter Control Structure [12]

In this figure, Z_{load} represents the equivalent impedance of all other loads connected to the network during islanded operation.

The most common GFM control strategies include droop control, Virtual Oscillator Control (VOC), and Virtual Synchronous Generator (VSG) methods. These approaches allow GFMs to provide voltage, frequency, and inertia support to the grid while maintaining stable and coordinated operation under parallel inverter conditions. Additional functionalities have been developed to extend their capabilities, such as self-synchronization (especially for two-stage inverter topologies), which adds DC-link voltage regulation through droop functions. Other advanced features include seamless mode transition, enabling smooth switching between grid-connected and islanded operation; black-start capability, allowing system restoration after a total blackout; and coordinated control, which enables operation under unbalanced grid conditions. [9].

Next, the detailed control structure of a GFM inverter is shown. In contrast to GFL inverters, GFMs do not require explicit synchronization. During normal grid-connected operation, a GFM inverter follows power reference signals provided by a system-level controller or a Maximum Power Point Tracking (MPPT) algorithm to deliver high-quality power to the grid. Under abnormal grid conditions, however, the inverter can generate its own voltage and frequency based on internal

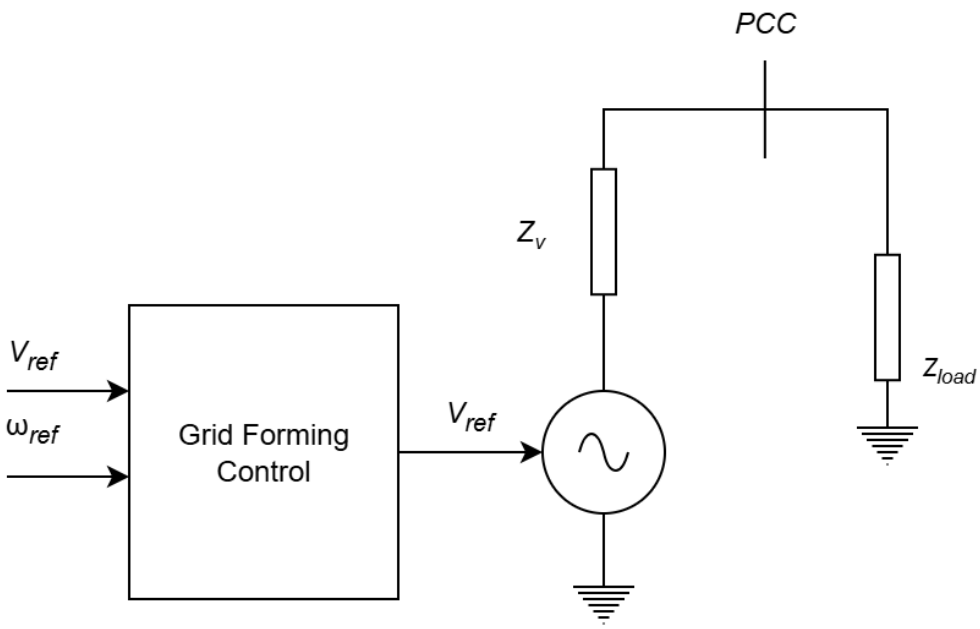

Figure 2.5: fig:Grid Forming Inverter Control Structure Islanding Operation [9]

control references, without using a PLL. This functionality enables direct voltage, frequency, and inertia support to the utility grid. [9]

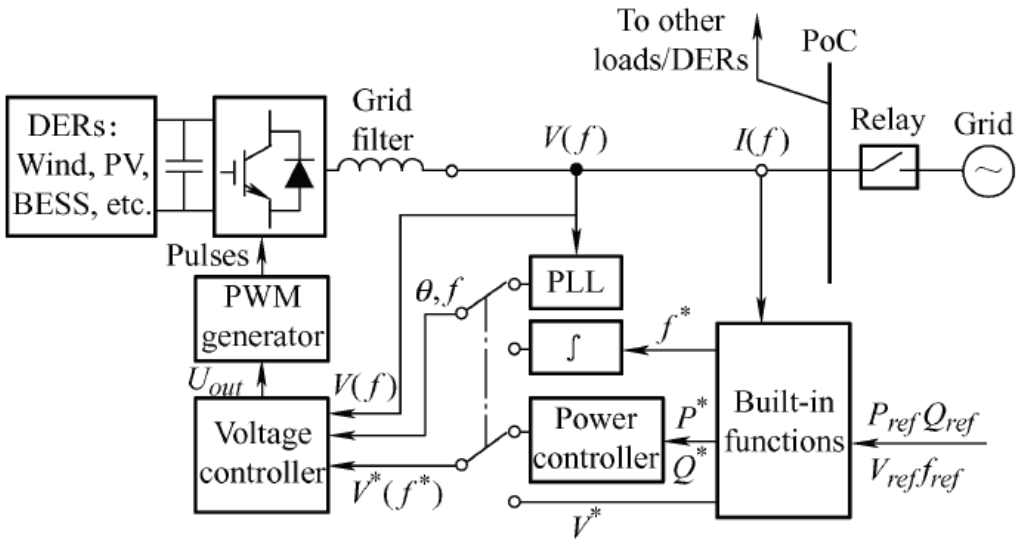

Figure 2.6: fig:Grid Forming Inverter Detailed Control Blocks [9]

2.2 GFM Control Methods

Distributed Generators (DGs) are typically composed of a DC link and two main stages: an input-side converter and a grid-side converter. The input side varies depending on the specific technology and energy source used. The grid-side converter, on the other hand, usually consists of a DC/AC converter.

Grid-Forming technologies, through autonomous adjustment of their output voltage and frequency, ensure seamless operation regardless of dynamic load conditions or variations in solar irradiance — for instance, in photovoltaic grid-forming plants. These inverters operate based on fundamental control principles that include power regulation, frequency control, and voltage support.[13]

- Power control strategy: GFM control algorithms control the active and reactive power outputs, in this way, devices can balance effectively power generation and demand when demand or generation fluctuate.
- Frequency Regulation: GFM adjust autonomously grid frequency, in case of frequency deviatons, GFM modify its output to restore the grid frequency nominal value.
- Voltage control: By controlling reactive power flow, GFMs are able to provide grid support during transient conditions and ensure voltage stability.

The primary objective in controller design, regardless of the selected control method, is to meet the requirements established by grid codes. These requirements ensure the continuous and stable operation of the power converter under both steady-state and transient conditions. [10]

2.2.1 Droop Control

The droop control method emulates the speed-droop mechanism of a synchronous generator. It is derived from the concept of primary frequency control and enables power sharing proportional to each converter's nominal power. In this control strategy, an inverse relationship exists between frequency deviation and active power variation. [10]

Droop control is one of the most mature and widely implemented Grid-Forming control methods. It adjusts the frequency and amplitude of the reference voltage through the P–f and Q–V droop loops, respectively. The main purpose is to emulate the voltage and frequency regulation behavior of synchronous generators. However, the rotor dynamics described by the swing equation—which represent the mechanical motion of large rotating machines—are not reproduced. As a result, droop-controlled inverters cannot inherently provide inertia support.

The frequency and voltage dynamics within the droop control loop can be expressed as follows: [1]

$$\begin{cases} \omega = \omega_{\text{ref}} + K_P(P_{\text{ref}} - P) \\ V = V_{\text{ref}} + K_Q(Q_{\text{ref}} - Q) \end{cases} \tag{2.1}$$

In the equations above, ω and V represent the inverter's output frequency and voltage magnitude, respectively. P and Q correspond to the measured active and reactive power, while P_{ref} and Q_{ref} denote their reference values. The terms K_P and K_Q are the frequency and voltage droop coefficients.

Droop-based control uses voltage and frequency characteristics to regulate power sharing among multiple inverters. This feature is highly beneficial for decentralized systems, as it enables proper power distribution without the need for explicit communication or centralized synchronization, resulting in a more robust and scalable control architecture. [13]

2.2.2 Virtual Synchronous Machine

The concept of the Virtual Synchronous Machine (VISMA or VSM) or also refered as Virtual Synchronous Generator (VSG) is intendet to emulate the behaviour of the synchronous generator, inspired by the swing equation, which represents

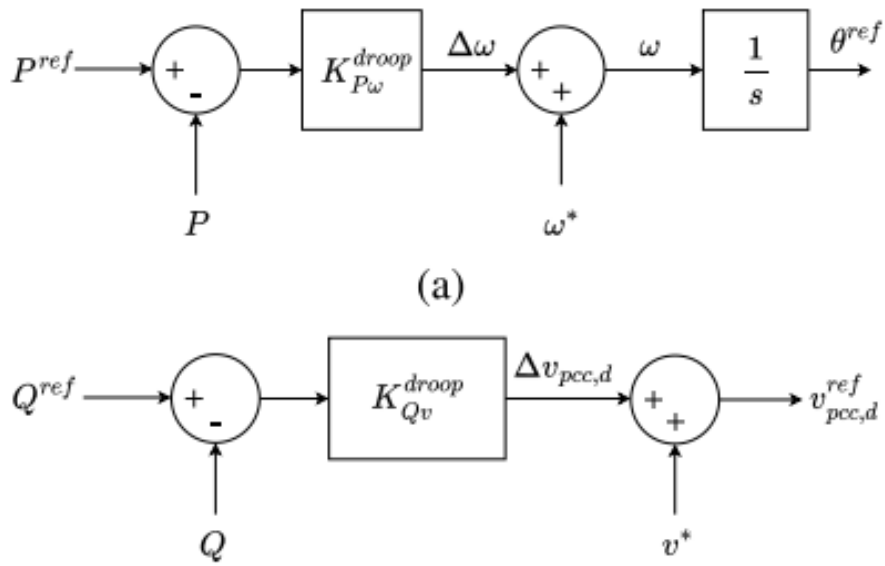

Figure 2.7: Block diagram of frequency and voltage droop control. [10]

the rotor-side dynamics of the SG, with the purpose of stabilizing frequency grid fluctuations in a grid with high presence of IBRs.

$$\dot{\theta}^{ref} = \omega \tag{2.2}$$

$$\dot{\omega} = \frac{1}{J\omega}\left(P^{ref} - P\right) + \frac{D_p}{J}\left(\omega^* - \omega\right) \tag{2.3}$$

$$v_{pcc,abc}^{ref} = 2\omega M_f i_o \begin{bmatrix} \sin(\theta) \\ \sin\left(\theta - \frac{2\pi}{3}\right) \\ \sin\left(\theta - \frac{4\pi}{3}\right) \end{bmatrix} \tag{2.4}$$

$$i_o = \frac{k_p}{M_f}\left(v^* - \|v_{pcc,dq}\|\right) + \frac{k_i}{M_f}\int_0^t \left(v^* - \|v_{pcc,dq}(\tau)\|\right) d\tau \tag{2.5}$$

In contrast with the droop control, VSM emulates the rotor motion and the electromagnetic transient equation of the synchronous machine, in this way, virtual inertia can be provided, as the control tries to replicate the inherent behaviour of big rotating masses, when subjecteds to a fault, basically natural inertia (describe what inertia is). This method avoid rapid fluctiations in the frequency and the voltage, it also provides inertia, damping and voltage support. The equation that descrobes the VSM control is represented by [1].

$$J\omega s = \frac{(P_{\text{ref}} - P)}{\omega_{\text{ref}}} - D(\omega_{\text{ref}} - \omega) \tag{2.6}$$

AGREGAR IMAGENES DEL VIRTUAL SYNCHRONOUES MACHINE

J is the rotational inertia, D denotes the damping coefficient for the frequency. The emulation of the behaviour of the synchronous machine allows the GFM inverter to provide virtual inertia which support stabilizing the grid during dynamic grid conditions. A clear disadvantage of this control technique is that the inverter tunnnig parameters is complex and the droop control technique is more mature and proved. [13]

To emulate the swing equation, a short-term energy storage unit and the appropiate controller is used to provide short term virtual inertia for anz disrtributed energy resource. As mentioned, the swing equation represents the rotor side

dynamics of a synchronoues machine as. [7]

$$J\omega_0 \frac{d\omega_r}{dt} + D_p\omega_r = P_m - P_e \tag{2.7}$$

where ω_r, D_p, J, P_m and P_e are angular speed of the rotor, damiping constant, the moment of inertia, mechanical power and electrical power respectively. The transfer function of basic VSG control can be expressed as shown in the equation, where D_p and k_m are chosen based on the expected or desired $P - \omega$ droop, while J is selected based on the required virtual inertia provision. On the other hand, one key advantge of the VSG over real synchronous machinesis that the design parameters, such as D_p and J can be modified during operation [7]

$$K_{\text{vsg}} = \frac{\Delta\omega}{\Delta P} = \frac{1}{(D_p + k_m)} \left(\frac{1}{\frac{J\omega_0}{D_p + k_m} s + 1} \right) \tag{2.8}$$

The control block diagram of the basic VSG conztol structure based on the swing equation is shown in the figure

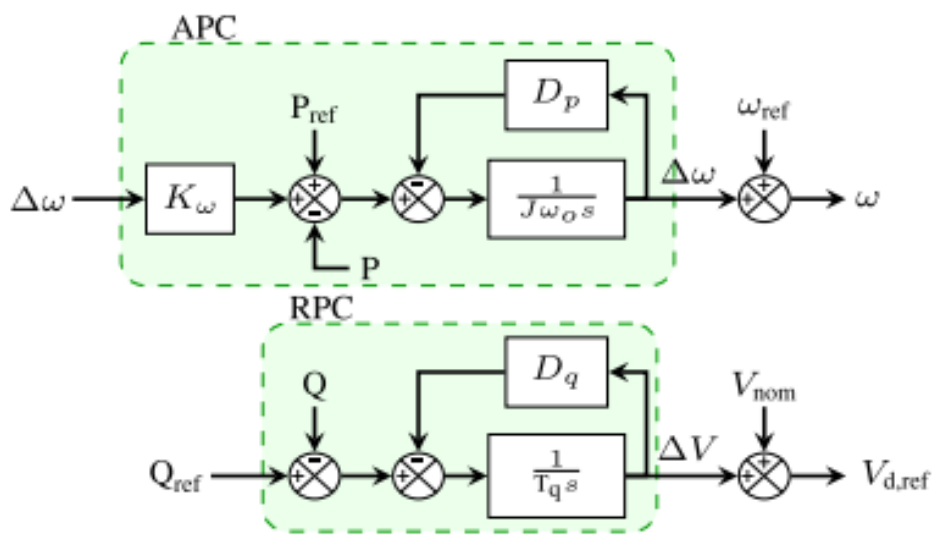

Figure 2.8: Swing based virtual synchronous generator. [7]

2.2.3 Virtual Oscillator Control

This control technique utilizes virtual oscillator models to synchronize multiple grid-forming devices without relying on external signals. This advantage enables independent synchronization, making GFM inverters compatible with a wide range of grid conditions. However, it has been observed that this method is highly sensitive to tuning parameters and offers a limited synchronization range. [13]

In a conventional digitally controlled PWM inverter, the controller samples the output voltage and current and adjusts them through a double closed-loop structure with PI controllers to follow a predefined reference. In contrast, Virtual Oscillator Control (VOC) internally generates its own reference waveform using a virtual sinusoidal oscillator. When the inverter output follows this internally generated signal, it behaves as if it were a physical oscillator. This self-synchronizing behavior represents the fundamental principle of VOC. [11]

In Fig. 2.9, $u(t)$ denotes the capacitor voltage of the LC electromagnetic oscillator. The VOC is a nonlinear control technique designed to reproduce the dynamics of a nonlinear oscillator. The virtual oscillator consists of a virtual resistor, capacitor, and inductor, together with a voltage-dependent current source. Scaled quantities of the inverter current and

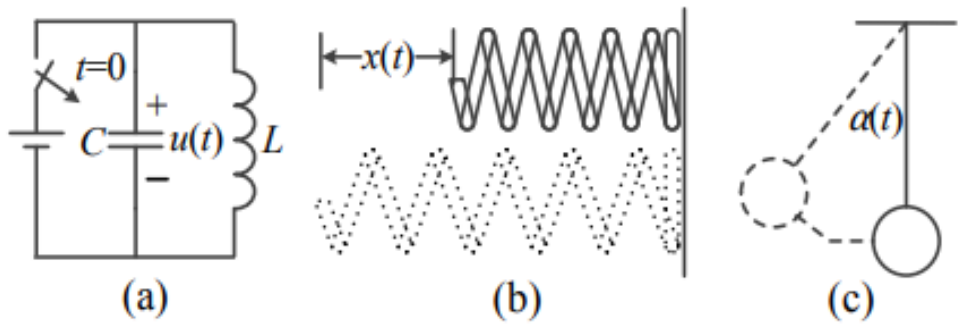

Figure 2.9: Models of virtual resonance generators. [11]

capacitor voltage are used to implement the VOC, where the capacitor voltage serves as the control signal in the pulse width modulation (PWM) process to produce the terminal voltage. The controller is a decentralized version of the Van der Pol oscillator, composed of a parallel connection of a virtual inductor, capacitor, conductor, and a cubic voltage-dependent current source. [7]

Unlike droop control, which requires complex active and reactive power calculations and therefore exhibits slower transient performance, VOC-controlled inverters operate without explicit power calculations. In parallel systems, active and reactive power are not direct control variables, allowing for a faster transient response. [11]

Furthermore, VOC behavior converges to that of droop control under steady-state conditions. In addition, due to its time-domain nature, VOC provides faster and more stable transient dynamics compared to the traditional droop control approach. [6]

2.3 Grid Forming Capanilities

2.4 Power System Stability and Resilience

2.5 Frequency and Voltage Stability Indicators

2.6 Grid Strength and Short-Circuit Ratio

2.7 Real World Examples

2.8 Conventional Stability Support

2.9 Research Gap and Motivation

2.10 German Energy Market

2.11 Grid Stability

2.12 Ancillary Services

Defined by the standards, the first DG units required their disconnection in the case of grid faults. However, this operation is no longer accepted for modern DG plants, for instance, for modern wind power systems, the low votage ride thorugh (LVRT) [8]

Chapter 3

Objectives

3.1 Research Question

3.2 Scenarios

Chapter 4

Developed Method

4.1 Method

As we see ...

Chapter 5

Evaluation der Methode

Chapter 6

Ergebnisse

Chapter 7

Zusammenfassung und Ausblick

Appendix A

Programmcode

Bibliography

[1] Yongxiang Cai et al. "Evaluation for Grid-Forming Capability of Battery Energy Storage Systems." In: *2024 8th International Conference on Power and Energy Engineering (ICPEE)*. 2024, pp. 222–226. DOI: 10.1109/ICPEE64457.2024.10949993.

[2] Yashen Lin et al. *Stabilizing the Power System in 2035 and Beyond: Evolving from Grid-Following to Grid-Forming Distributed Inverter Controllers (Final Technical Report)*. Tech. rep. National Renewable Energy Laboratory (NREL), Golden, CO (United States); Univ. of Minnesota, Minneapolis, MN (United States); Univ. of California, Santa Barbara, CA (United States); Sun Power, San Jose, CA (United states); Lawrence Berkeley National Lab. (LBNL), Berkeley, CA (United States); Sandia National Lab. (SNL-NM), Albuquerque, NM (United States); Univ. of Wisconsin, Madison, WI (United States), Aug. 2021. DOI: 10.2172/1813971. URL: https://www.osti.gov/biblio/1813971.

[3] B. Mirafzal and A. Adib. "On Grid-Interactive Smart Inverters: Features and Advancements." In: *IEEE Access* 8 (2020), pp. 160526–160536. DOI: 10.1109/ACCESS.2020.3020935.

[4] Abhishekh Mishra et al. "A Comparative Analysis of Grid-Following and Grid-Forming Control Techniques Used in Inverter-based Resources." In: *2025 IEEE 1st International Conference on Smart and Sustainable Developments in Electrical Engineering (SSDEE)*. 2025, pp. 01–06. DOI: 10.1109/SSDEE64538.2025.10968238.

[5] Dinesh Pattabiraman, R. H. Lasseter., and T. M. Jahns. "Comparison of Grid Following and Grid Forming Control for a High Inverter Penetration Power System." In: *2018 IEEE Power & Energy Society General Meeting (PESGM)*. 2018, pp. 1–5. DOI: 10.1109/PESGM.2018.8586162.

[6] Amro Quedan, Deepak Ramasubramanian, and Evangelos Farantatos. "Virtual Oscillator Controlled Grid Forming Inverters Modelling and Testing in Phasor Domain." In: *2021 IEEE 12th Energy Conversion Congress & Exposition - Asia (ECCE-Asia)*. 2021, pp. 2375–2380. DOI: 10.1109/ECCE-Asia49820.2021.9479398.

[7] Dayan B. Rathnayake et al. "Grid Forming Inverter Modeling, Control, and Applications." In: *IEEE Access* 9 (2021). Received July 15, 2021; accepted August 7, 2021; published August 13, 2021; current version August 24, 2021, pp. 114723–114741. DOI: 10.1109/ACCESS.2021.3104617. URL: https://doi.org/10.1109/ACCESS.2021.3104617.

[8] Joan Rocabert et al. "Control of Power Converters in AC Microgrids." In: *IEEE Transactions on Power Electronics* 27.11 (2012), pp. 4734–4749. DOI: 10.1109/TPEL.2012.2199334.

[9] Guanhong Song, Bo Cao, and Liuchen Chang. "Review of Grid-forming Inverters in Support of Power System Operation." In: *Chinese Journal of Electrical Engineering* 8.1 (2022), pp. 1–15. DOI: 10.23919/CJEE.2022.000001.

[10] Macit Tozak et al. "Modeling and Control of Grid Forming Converters: A Systematic Review." In: *IEEE Access* 12 (2024), pp. 107818–107843. DOI: 10.1109/ACCESS.2024.3437236.

[11] Yong Tu et al. "Improved virtual oscillator control for parallel operation inverter systems." In: *2016 IEEE 8th International Power Electronics and Motion Control Conference (IPEMC-ECCE Asia)*. 2016, pp. 2063–2067. DOI: 10.1109/IPEMC.2016.7512614.

[12] Hao Xu et al. "A Review of Control Technologies and Principles for Grid-Forming Converters." In: *2025 10th Asia Conference on Power and Electrical Engineering (ACPEE)*. 2025, pp. 1496–1500. DOI: 10.1109/ACPEE64358.2025.11041180.

[13] Younes Zahraoui et al. "Grid-Forming Technologies for Resilient Renewable Energy Integration Into Power Systems: A Review." In: *2024 International Conference on Smart Systems and Technologies (SST)*. 2024, pp. 191–196. DOI: 10.1109/SST61991.2024.10755449.