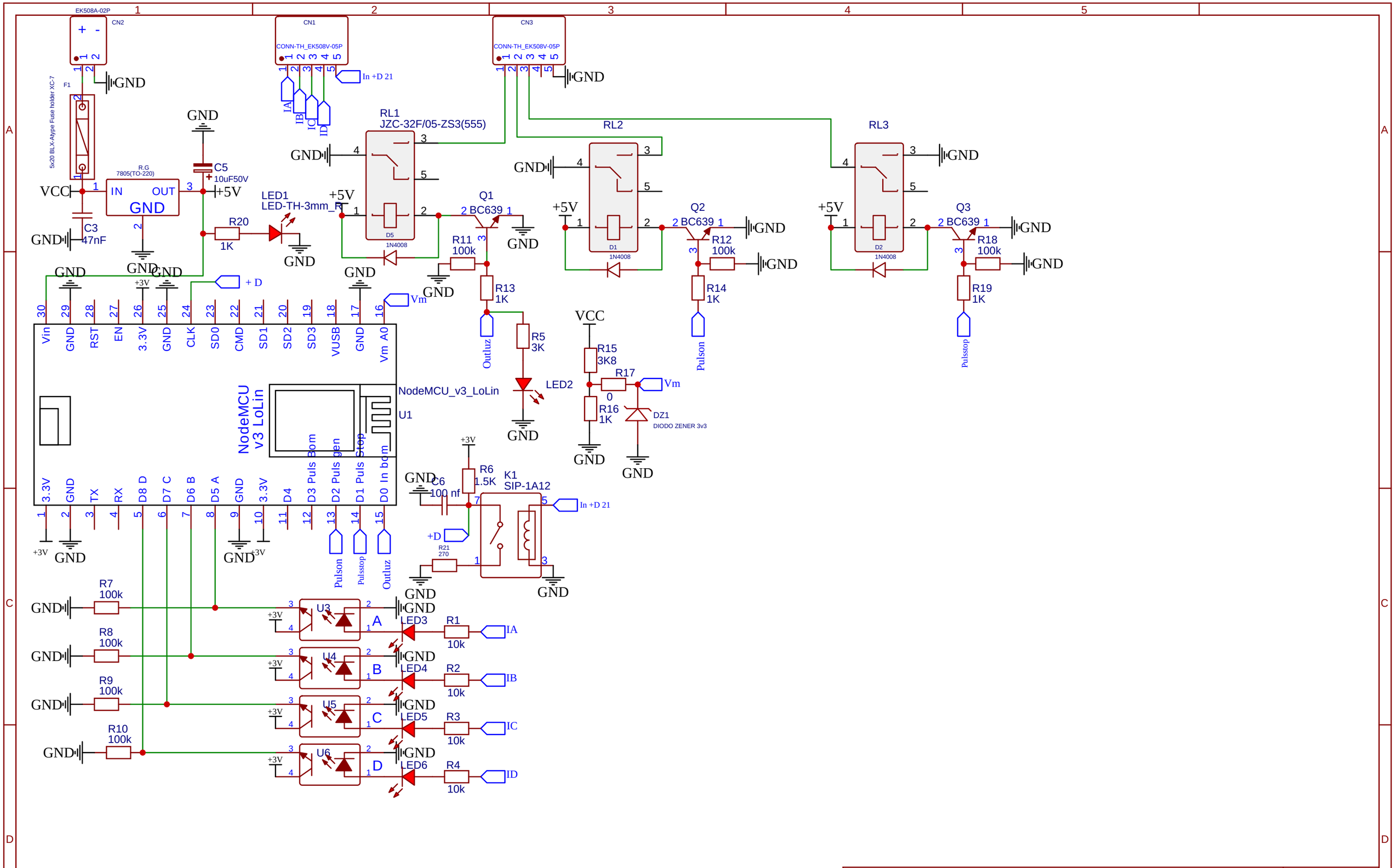

TITLE: Sheet_1 Control de generador online		REV: 1.2
EasyEDA	Company: Aeró dromo de Sesma	Sheet: 1/1
	Date: 2021-10-22 Drawn By: TitoClavi	