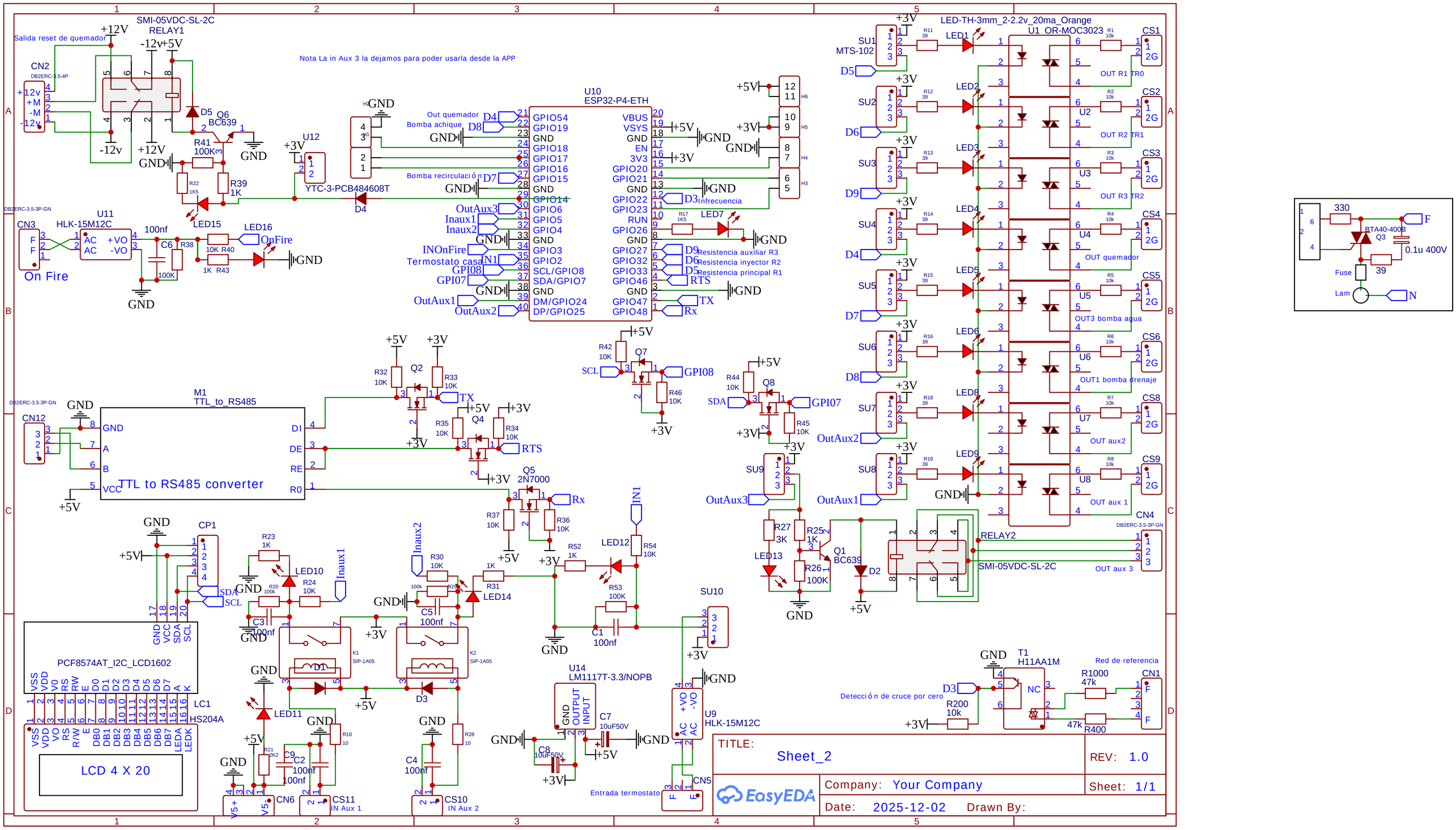
A version -40°C to +220°C
12V Only Board
SMI-05VDC-SL-2C
RELAY1
Salida reset de quemador
Nota La in Aux 3 la dejamos para poder usarla desde la APP
CN2
DB2ERC-3.5-4P
Q6
BC639
D5
R41
100K
R22
1K5
R39
1K
U12
YTC-3-PCB484608T
D4
U11
HLK-15M12C
CN3
DB2ERC-3.5-3P-GN
On Fire
100nf
C6
R38
100K
LED15
LED16
OnFire
10K R40
1K R43
U10
ESP32-P4-ETH
Out quemador
Bomba achique
Bomba recirculación
OutAux3
Inaux1
Inaux2
INOnFire
Termostato casa
GPI08
GPI07
OutAux1
OutAux2
Infrecuencia
LED7
Resistencia auxiliar R3
Resistencia inyector R2
Resistencia principal R1
RTS
TX
Rx
R17
1K5
LED1
LED2
LED3
LED4
LED5
LED6
LED8
LED9
LED13
LED10
LED11
LED12
LED14
LED-TH-3mm_2-2.2v_20ma_Orange
U1_OR-MOC3023
SU1
MTS-102
SU2
SU3
SU4
SU5
SU6
SU7
SU8
SU9
SU10
CS1
CS2
CS3
CS4
CS5
CS6
CS8
CS9
OUT R1 TR0
OUT R2 TR1
OUT R3 TR2
OUT quemador
OUT3 bomba agua
OUT1 bomba drenaje
OUT aux2
OUT aux 1
OUT aux 3
CN4
RELAY2
SMI-05VDC-SL-2C
Q1
BC639
D2
R27
3K
R25
1K
R26
100K
Q7
Q8
R42
10K
R44
10K
R46
10K
R45
10K
SCL
SDA
M1
TTL_to_RS485
TTL to RS485 converter
CN12
DB2ERC-3.5-3P-GN
Q2
Q4
Q5
2N7000
R32
10K
R33
10K
R35
10K
R34
10K
R37
10K
R36
10K
CP1
PCF8574AT_I2C_LCD1602
LC1
HS204A
LCD 4 X 20
R23
1K
R24
10K
R20
100k
R30
10K
R31
1K
R52
1K
R54
10K
R53
100K
C1
100nf
C3
100nf
C5
100nf
C2
100nf
C9
100nf
C4
100nf
K1
SIP-1A05
K2
SIP-1A05
D1
D3
R10
10
R28
10
R21
2K2
CN6
CS11
IN Aux 1
CS10
IN Aux 2
U14
LM1117T-3.3/NOPB
C7
10uF50V
C8
10uF50V
U9
HLK-15M12C
CN5
Entrada termostato
T1
H11AA1M
Detección de cruce por cero
D3
R200
10k
R1000
47k
R400
47k
CN1
Red de referencia
330
BTA40-400B
Q3
0.1u 400V
Fuse
39
Lam
F
N
TITLE:
Sheet_2
REV: 1.0
Company: Your Company
Sheet: 1/1
Date: 2025-12-02
Drawn By:
EasyEDA