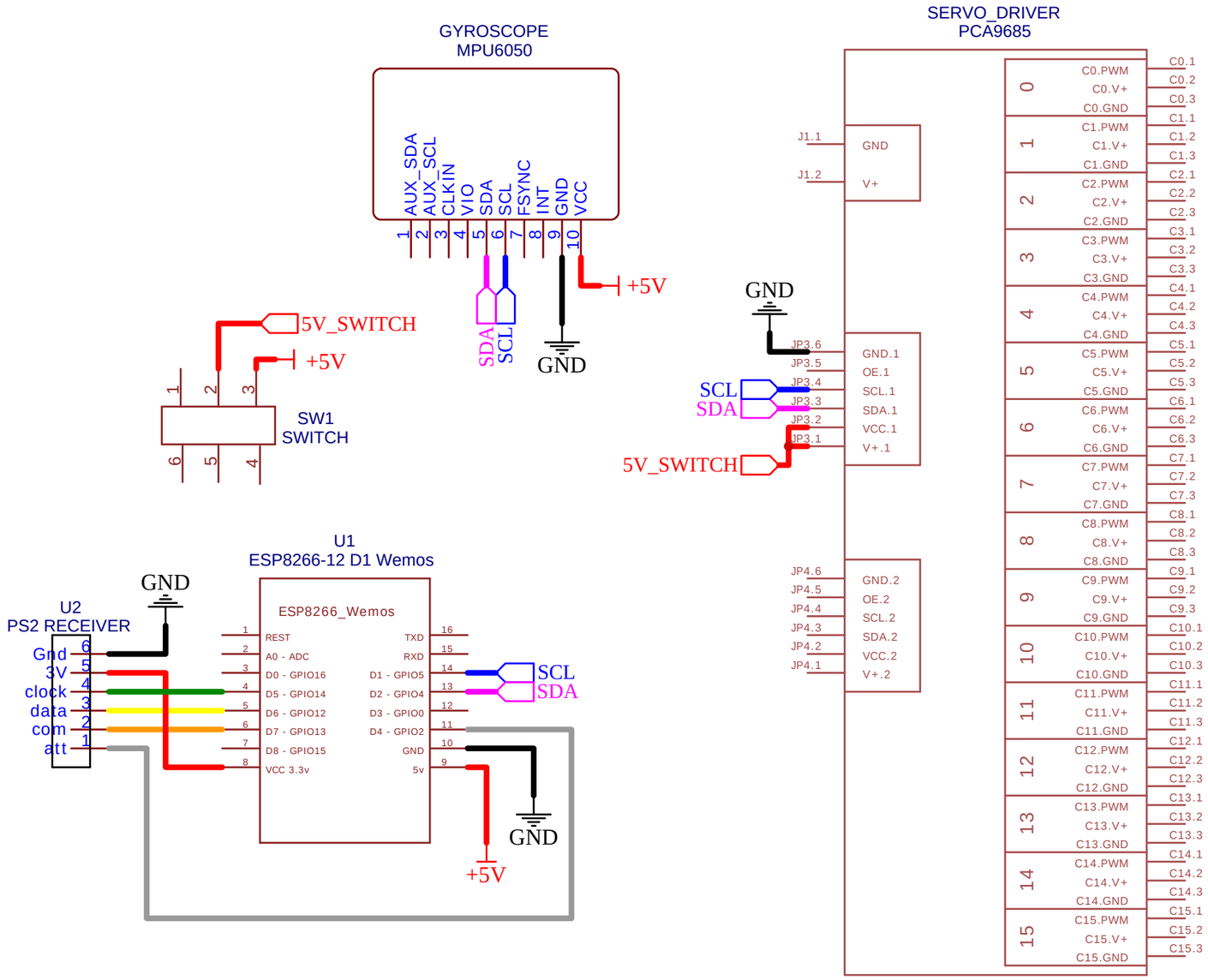

TITLE: LEGS CONTROL CIRCUIT	REV: 1.0
Company:	Sheet: 1/1
Date: 2023-03-15 Drawn By: Mario Kompan	