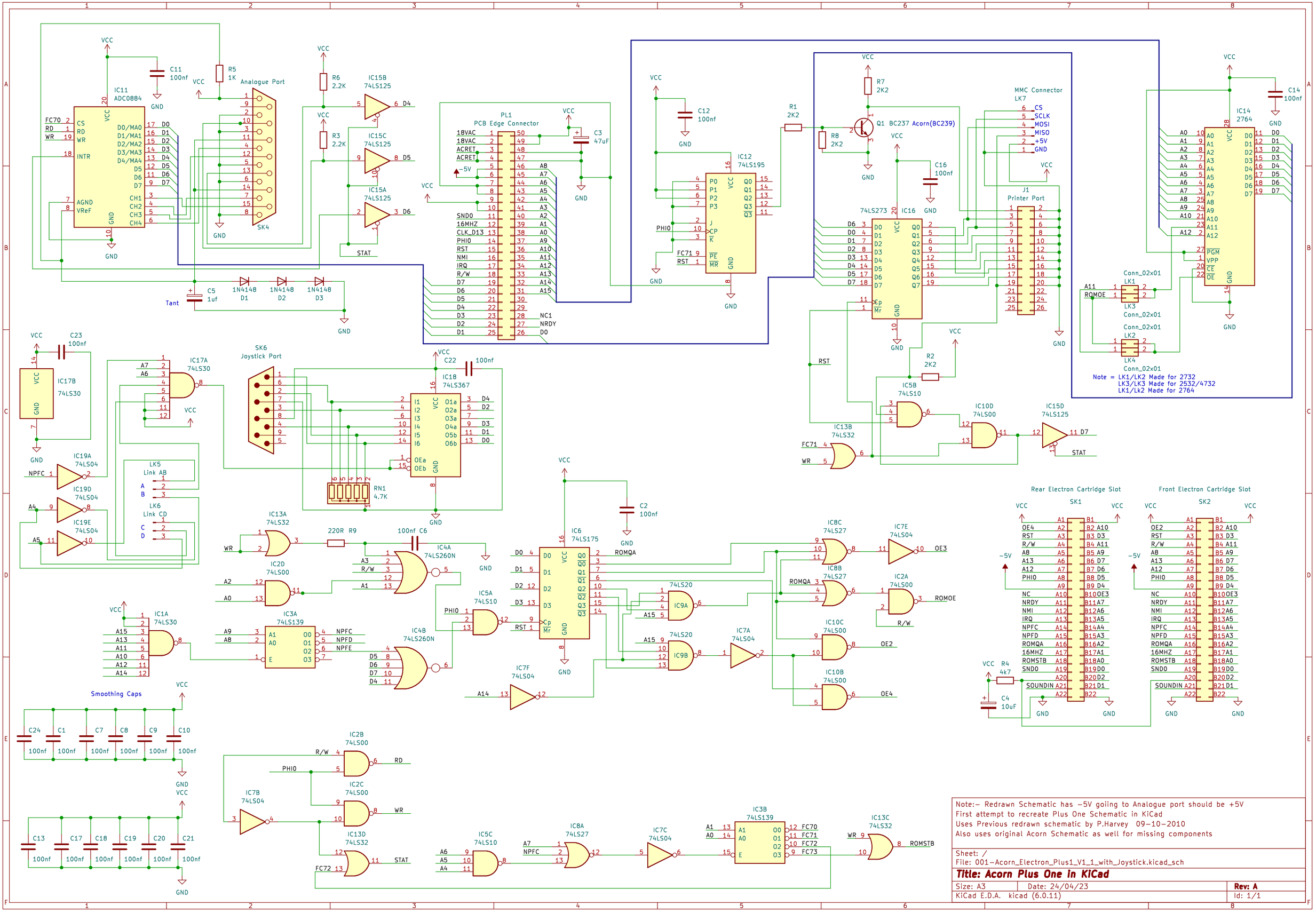
IC11 ADC0884
Analogue Port
SK4
PL1 PCB Edge Connector
IC12 74LS195
IC14 2764
MMC Connector LK7
Q1 BC237 Acorn(BC239)
IC16 74LS273
J1 Printer Port
Note = LK1/LK2 Made for 2732
LK3/LK3 Made for 2532/4732
LK1/Lk2 Made for 2764
SK6 Joystick Port
IC18 74LS367
IC6 74LS175
Smoothing Caps
Rear Electron Cartridge Slot SK1
Front Electron Cartridge Slot SK2
Note:- Redrawn Schematic has -5V going to Analogue port should be +5V
First attempt to recreate Plus One Schematic in KiCad
Uses Previous redrawn schematic by P.Harvey 09-10-2010
Also uses original Acorn Schematic as well for missing components
Sheet: /
File: 001-Acorn_Electron_Plus1_V1_1_with_Joystick.kicad_sch
Title: Acorn Plus One in KiCad
Size: A3
Date: 24/04/23
Rev: A
KiCad E.D.A. kicad (6.0.11)
Id: 1/1