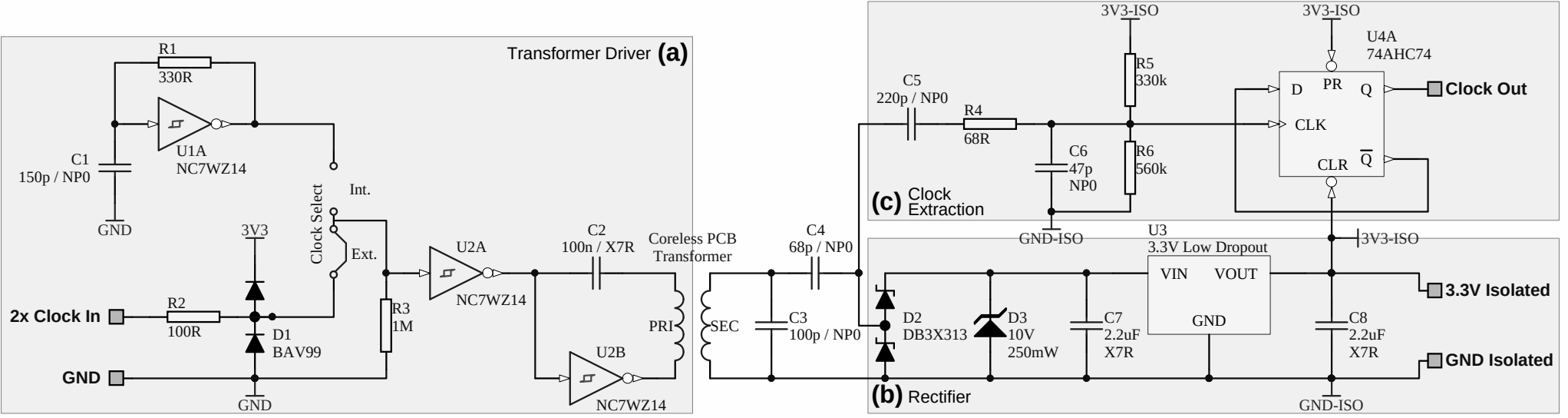
Transformer Driver (a)
R1
330R
U1A
NC7WZ14
C1
150p / NP0
GND
3V3
Clock Select
Int.
Ext.
2x Clock In
R2
100R
D1
BAV99
R3
1M
GND
U2A
NC7WZ14
C2
100n / X7R
Coreless PCB
Transformer
PRI
U2B
NC7WZ14
SEC
C3
100p / NP0
C4
68p / NP0
(b) Rectifier
D2
DB3X313
D3
10V
250mW
C7
2.2uF
X7R
U3
3.3V Low Dropout
VIN
VOUT
GND
C8
2.2uF
X7R
3.3V Isolated
GND Isolated
GND-ISO
3V3-ISO
(c) Clock
Extraction
C5
220p / NP0
R4
68R
C6
47p
NP0
R5
330k
R6
560k
U4A
74AHC74
D
PR
Q
CLK
CLR
Q
Clock Out