# Graph Shortest Path

Part 16

1

# Dijkstra's Algorithm

Finding the best route!

2

## Getting the Shortest Path

- The Kruskal and Prim-Jarník Algorithms can efficiently create minimum spanning trees
- And these are the "best" trees that *span all nodes*

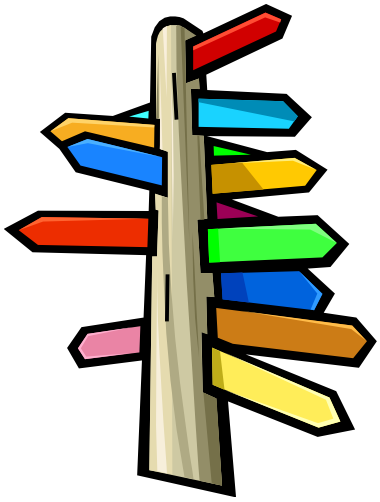





## Getting the Shortest Path

- However, it doesn't necessarily produce the minimum path for *each* vertex to reach other vertices
- In other words, the shortest path for each, *between two vertices*, might not be reflected in the MST

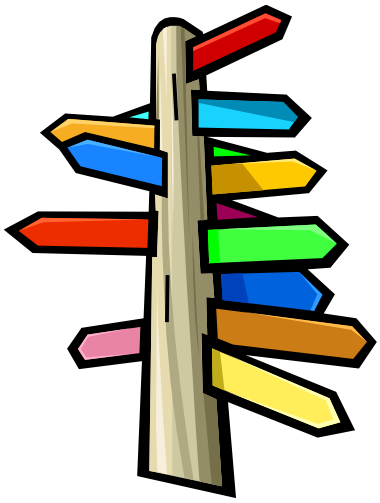

## The Minimum Spanning Tree

- This is the spanning tree created by both the Prim-Jarník & Kruskal Algorithms
- Let's say we want to get the minimal path from B to D

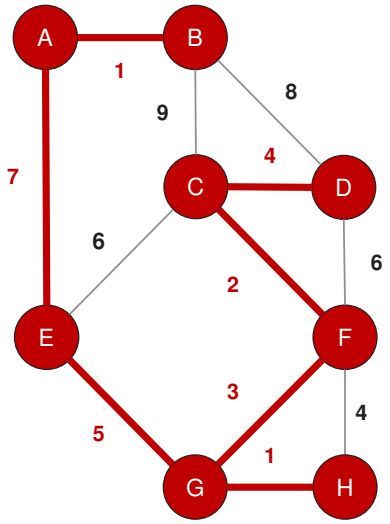






## Shortest Path is NOT on the Tree

- The incident edge from vertex B to D has a weight of **8**
- However, following the spanning tree, the total weight would be **22**

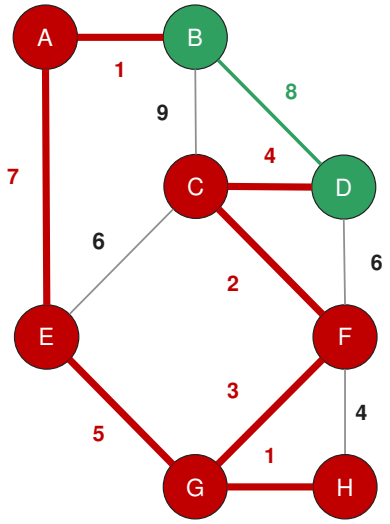

## Getting the Shortest Path

- We need to compute the best path for **each** vertex
- This is called the *distance*
- Given 2 vertices ***a*** and ***b*** ...
  - find a path with the "best" total weight between ***a*** and ***b***
  - …with the minimum sum

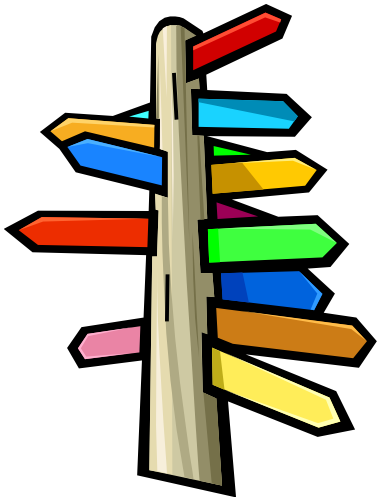





## Some Real World Examples

- Internet packet routing
  - fastest route – faster downloads
  - load distribution
- Driving directions
  - shortest route in miles
  - fastest route – given traffic and speed limit data

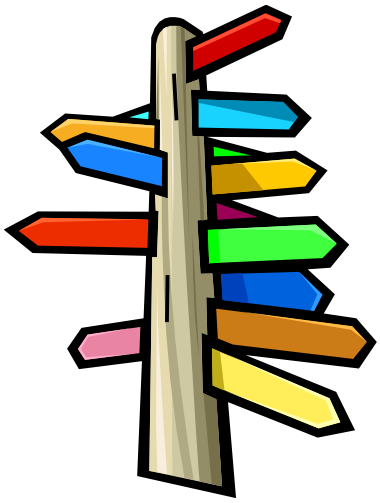

## Edsger Dijkstra

- The algorithm used today to find the optimal path was written by Edsger Dijkstra
- In fact, his algorithm runs the Internet – a self healing, load distributing, network
- **No Dijkstra → No Internet**

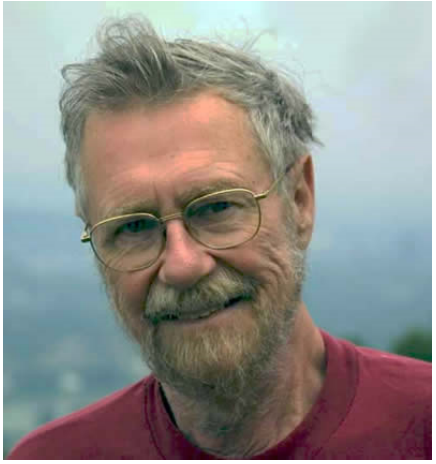





## Dijkstra's Algorithm

- *Dijkstra's Shortest Path First Algorithm* computes the distances of all the vertices from a given start vertex s
- Works on directed and undirected graphs
- However…
  - all edges must have nonnegative weight, and…
  - the graph is connected

## Dijkstra's Algorithm

- Dijkstra's Algorithm is *greedy*
  - always takes the best immediate or local solution while finding an answer
  - they find optimal solutions for some optimization problems very efficiently
  - …but may find less-than-optimal solutions
- Extra analysis is needed to determine if they work - *Dijkstra's does*





## Dijkstra's Algorithm Logic

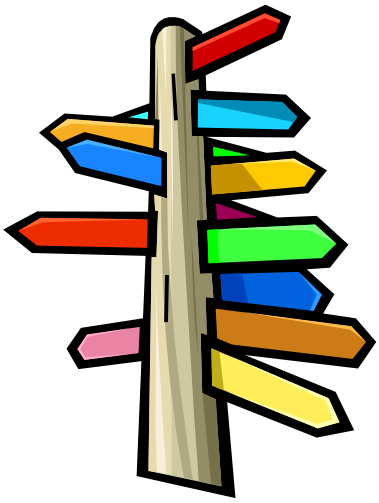

- **Each** vertex has its own "distance" table
- The table contains the best weight to each other vertex - as well as the best path

## Dijkstra's Algorithm Logic

1. Initialize a distance table
   - table represents the best distance (weight) to get to the specific vertices
   - set all to infinity (worst possible)
   - it will be updated as we see more vertices
2. Analyze vertices until all are *known* (visited)
   - always select the one with the smallest distance
   - *treat the vertices as being in a priority queue*



## Shortest Path Attributes

- A sub-path of a shortest path
  - …is itself a shortest path
  - *any subset of a optimal solution is also an optimal solution*
- There is a tree of paths
  - there are multiple paths from the start vertex to all other vertices
  - multiple equally-optimal solutions

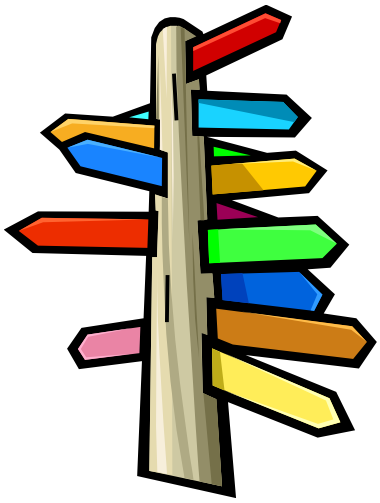

## Dijkstra's Algorithm Logic

- Given table D, vertex ***v***, edge weight ***w*** with target vertex ***t*** :
  **D(t) = D(v) + w**
- For example:
  - if it takes 12 to get to ***v***
  - edge ***w*** of 6 goes from ***v*** to ***t***
  - then it takes 12 + 6 to get to ***t***

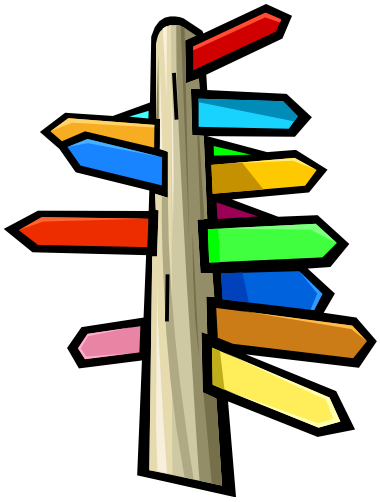





## Dijkstra's Algorithm Logic

- For each vertex ***v*** …
  - compute the total distance to get each vertex ***t*** that is adjacent to ***v***
  - if the value is better than the current table value <u>then</u> update the table

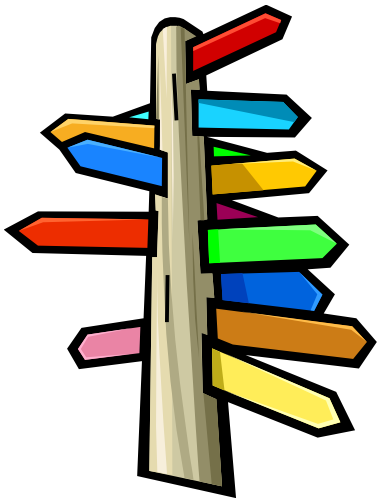

# Example 1: Vertex B Table

# Example 1: Vertex B Table

| Vertex | Best Path | Distance | Look |
|---|---|---|---|
| **A** | | ∞ | |
| **B** | **B** | **0** | |
| **C** | | ∞ | |
| **D** | | ∞ | |

Distance for B is set to 0. Path is simply "B".

Everything else is set to infinity.

# Example 1: Select Next

| Vertex | Best Path | Distance | Look |
|---|---|---|---|
| A | | ∞ | |
| B | B | 0 | |
| C | | ∞ | |
| D | | ∞ | |

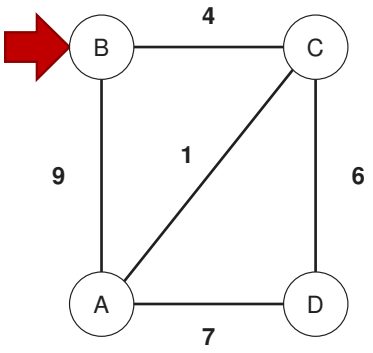






# Example 1: Check Edges

| Vertex | Best Path | Distance | Look |
|---|---|---|---|
| A | | ∞ | 0 + 9 |
| B | B | 0 | |
| C | | ∞ | 0 + 4 |
| D | | ∞ | |

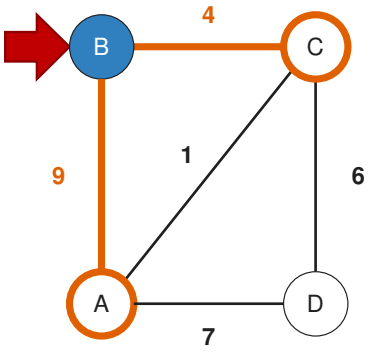

# Example 1: Update Table

| Vertex | Best Path | Distance | Look |
|---|---|---|---|
| A | B A | 9 | 0 + 9 |
| B | B | 0 | |
| C | B C | 4 | 0 + 4 |
| D | | ∞ | |

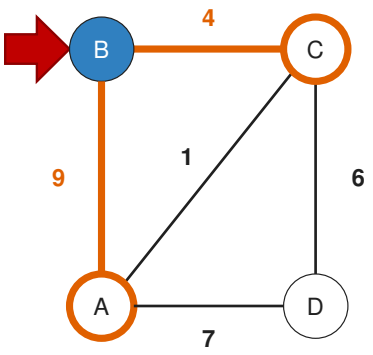






# Example 1: Select Next

| Vertex | Best Path | Distance | Look |
|---|---|---|---|
| A | B A | 9 | |
| B | B | 0 | |
| C | B C | 4 | |
| D | | ∞ | |

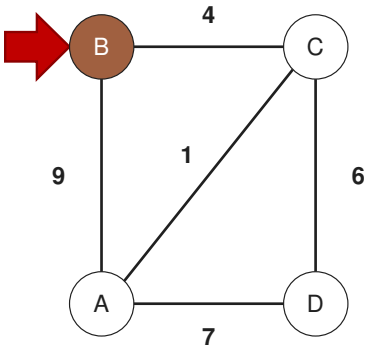

# Example 1: Check Edges

| Vertex | Best Path | Distance | Look |
|---|---|---|---|
| A | B A | 9 | 4 + 1 |
| B | B | 0 | |
| C | B C | 4 | |
| D | | ∞ | 4 + 6 |

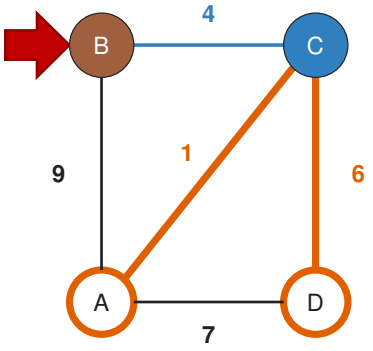






# Example 1: Update Table

| Vertex | Best Path | Distance | Look |
|---|---|---|---|
| A | B C A | 5 | 4 + 1 |
| B | B | 0 | |
| C | B C | 4 | |
| D | B C D | 10 | 4 + 6 |

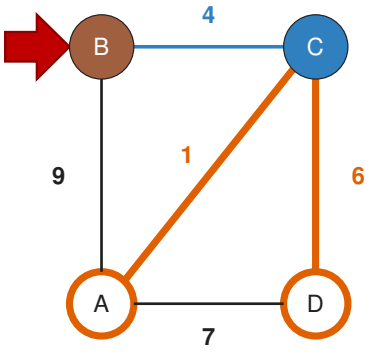

# Example 1: Select Next

| Vertex | Best Path | Distance | Look |
|---|---|---|---|
| A | B C A | 5 | |
| B | B | 0 | |
| C | B C | 4 | |
| D | B C D | 10 | |

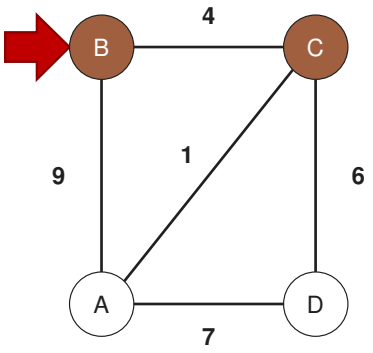






# Example 1: Check Edges

| Vertex | Best Path | Distance | Look |
|---|---|---|---|
| A | B C A | 5 | |
| B | B | 0 | |
| C | B C | 4 | |
| D | B C D | 10 | 5 + 7 |

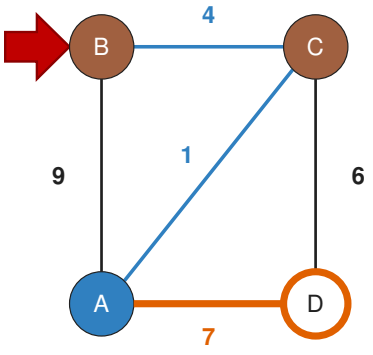

# Example 1: Update Table

| Vertex | Best Path | Distance | Look |
|---|---|---|---|
| A | B C A | 5 | |
| B | B | 0 | |
| C | B C | 4 | |
| D | B C D | 10 | 5 + 7 |

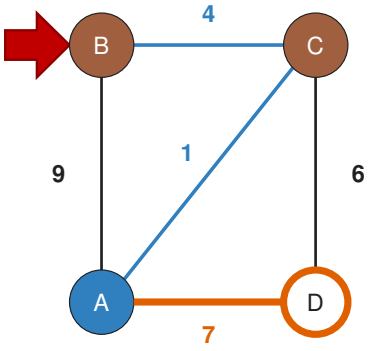






# Example 1: Select Next

| Vertex | Best Path | Distance | Look |
|---|---|---|---|
| A | B C A | 5 | |
| B | B | 0 | |
| C | B C | 4 | |
| D | B C D | 10 | |

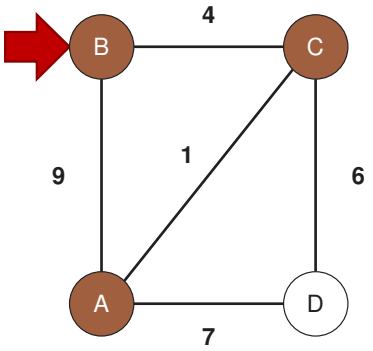

# Example 1: Check Edges

| Vertex | Best Path | Distance | Look |
|---|---|---|---|
| A | B C A | 5 | |
| B | B | 0 | |
| C | B C | 4 | |
| D | B C D | 10 | |

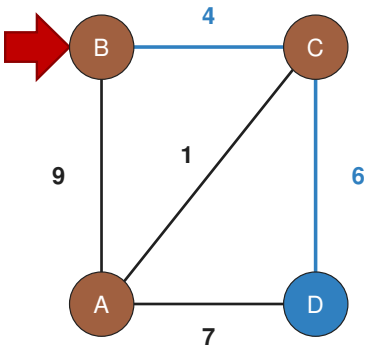






# Example 1: Vertex B Table Complete

| Vertex | Best Path | Distance |
|---|---|---|
| A | B C A | 5 |
| B | B | 0 |
| C | B C | 4 |
| D | B C D | 10 |

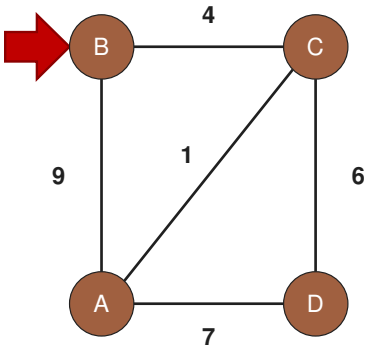

# Example 2

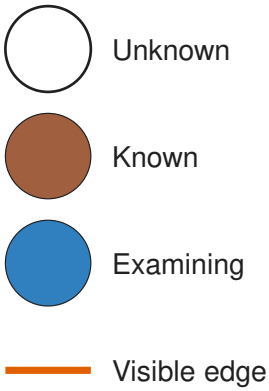


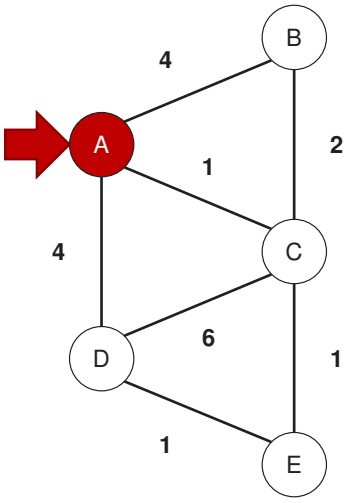






# Example 2: Vertex A Table

| Vertex | Best Path | Distance | Look |
|---|---|---|---|
| **A** | **A** | **0** | |
| **B** | | ∞ | |
| **C** | | ∞ | |
| **D** | | ∞ | |
| **E** | | ∞ | |

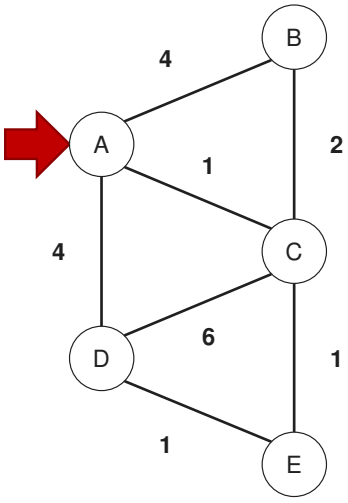

# Example 2: Check Edges

| Vertex | Best Path | Distance | Look |
|---|---|---|---|
| A | A | 0 | |
| B | | ∞ | 0 + 4 |
| C | | ∞ | 0 + 1 |
| D | | ∞ | 0 + 4 |
| E | | ∞ | |

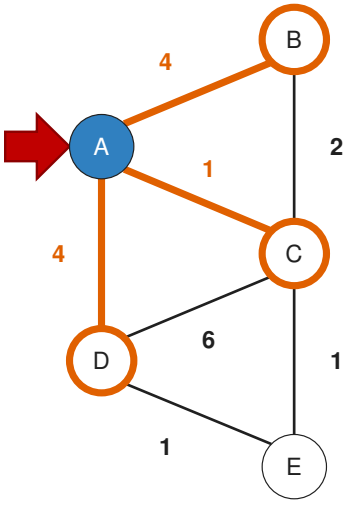






# Example 2: Update Table

| Vertex | Best Path | Distance | Look |
|---|---|---|---|
| A | A | 0 | |
| B | A B | 4 | 0 + 4 |
| C | A C | 1 | 0 + 1 |
| D | A D | 4 | 0 + 4 |
| E | | ∞ | |

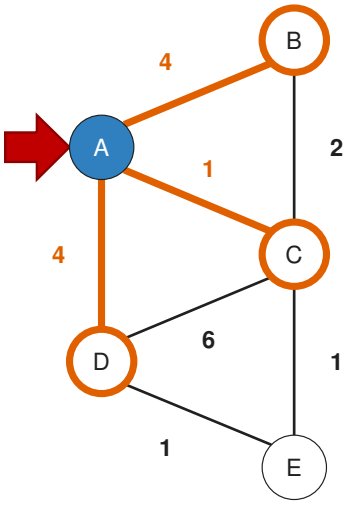

# Example 2: Select Next

| Vertex | Best Path | Distance | Look |
|---|---|---|---|
| A | A | 0 | |
| B | A B | 4 | |
| C | A C | 1 | |
| D | A D | 4 | |
| E | | ∞ | |

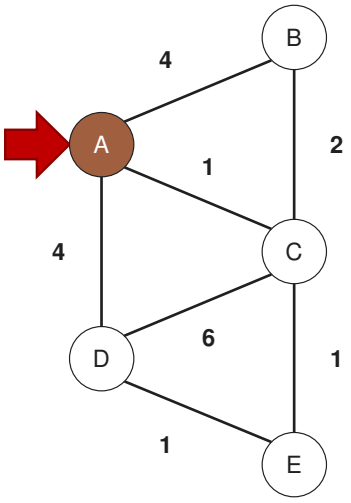






# Example 2: Check Edges

| Vertex | Best Path | Distance | Look |
|---|---|---|---|
| A | A | 0 | |
| B | A B | 4 | 1 + 2 |
| C | A C | 1 | |
| D | A D | 4 | 1 + 6 |
| E | | ∞ | 1 + 1 |

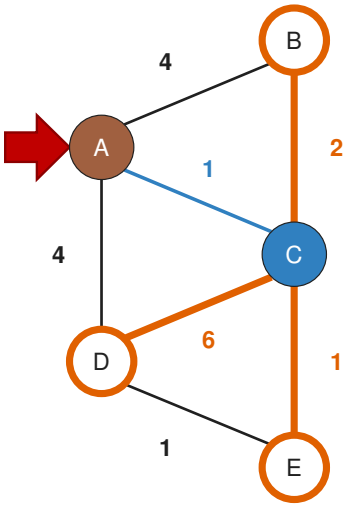

# Example 2: Update Table

| Vertex | Best Path | Distance | Look |
|---|---|---|---|
| A | A | 0 | |
| B | A C B | 3 | 1 + 2 |
| C | A C | 1 | |
| D | A D | 4 | 1 + 6 |
| E | A C E | 2 | 1 + 1 |

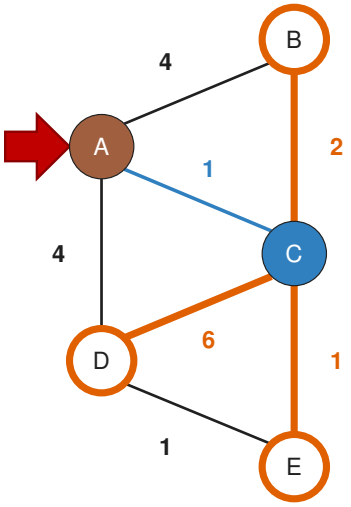






# Example 2: Select Next

| Vertex | Best Path | Distance | Look |
|---|---|---|---|
| A | A | 0 | |
| B | A C B | 3 | |
| C | A C | 1 | |
| D | A D | 4 | |
| E | A C E | 2 | |

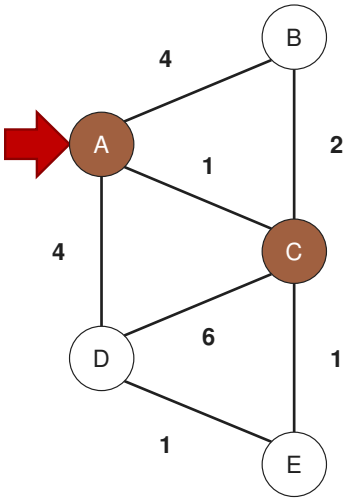

# Example 2: Check Edges

| Vertex | Best Path | Distance | Look |
|---|---|---|---|
| A | A | 0 | |
| B | A C B | 3 | |
| C | A C | 1 | |
| D | A D | 4 | 2 + 1 |
| E | A C E | 2 | |

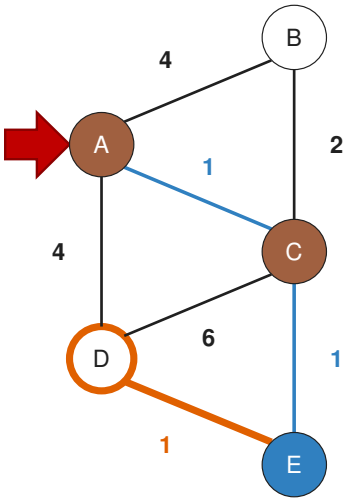






# Example 2: Update Table

| Vertex | Best Path | Distance | Look |
|---|---|---|---|
| A | A | 0 | |
| B | A C B | 3 | |
| C | A C | 1 | |
| D | A C E D | 3 | 2 + 1 |
| E | A C E | 2 | |

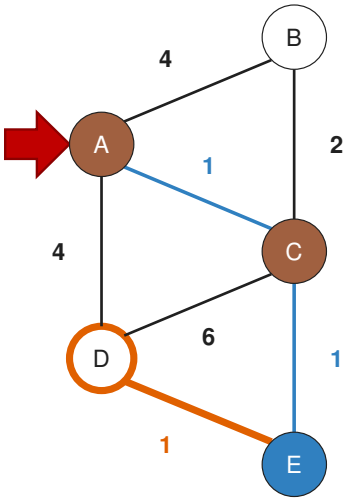

# Example 2: Select Next

| Vertex | Best Path | Distance | Look |
|---|---|---|---|
| A | A | 0 | |
| B | A C B | 3 | |
| C | A C | 1 | |
| D | A C E D | 3 | |
| E | A C E | 2 | |

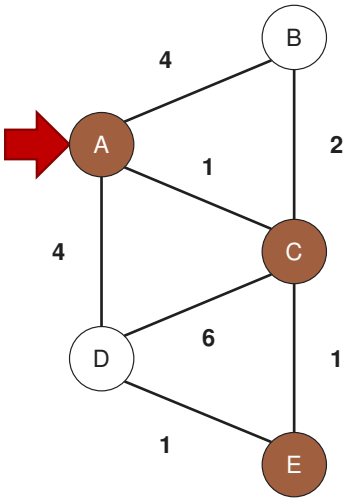






# Example 2: Vertex A Table

| Vertex | Best Path | Distance | Look |
|---|---|---|---|
| A | A | 0 | |
| B | A C B | 3 | |
| C | A C | 1 | |
| D | A C E D | 3 | |
| E | A C E | 2 | |

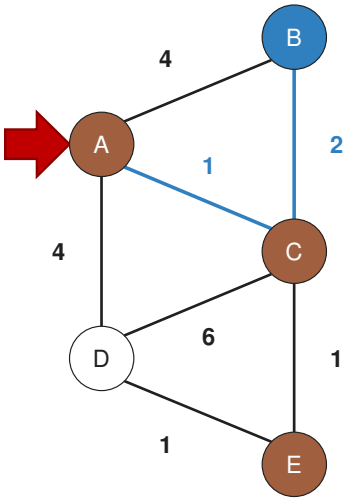

# Example 2: Vertex A Table

| Vertex | Best Path | Distance | Look |
|---|---|---|---|
| A | A | 0 | |
| B | A C B | 3 | |
| C | A C | 1 | |
| D | A C E D | 3 | |
| E | A C E | 2 | |

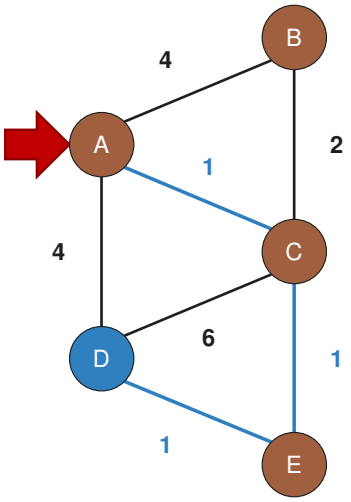






# Example 2: Vertex A Table Complete

| Vertex | Best Path | Distance |
|---|---|---|
| A | A | 0 |
| B | A C B | 3 |
| C | A C | 1 |
| D | A C E D | 3 |
| E | A C E | 2 |

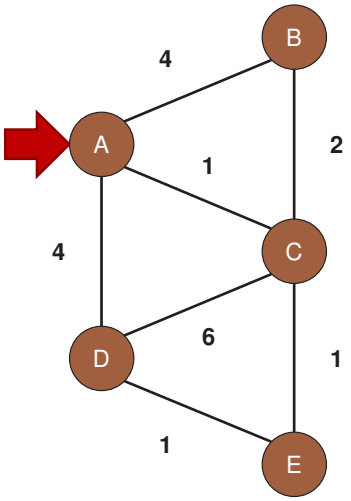

# Example 3

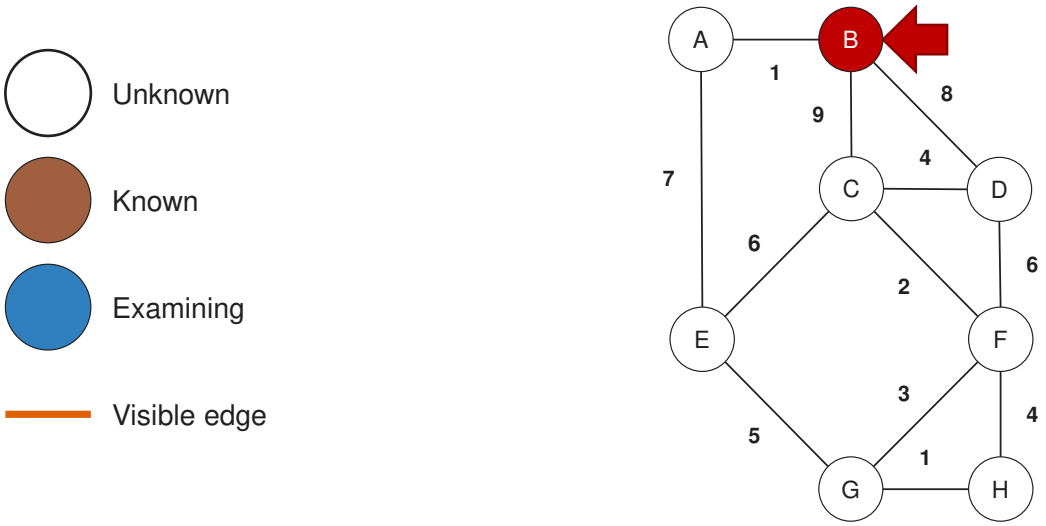






| Vertex | Best Path | Distance | Look |
|---|---|---|---|
| **A** | | ∞ | |
| **B** | **B** | **0** | |
| **C** | | ∞ | |
| **D** | | ∞ | |
| **E** | | ∞ | |
| **F** | | ∞ | |
| **G** | | ∞ | |
| **H** | | ∞ | |

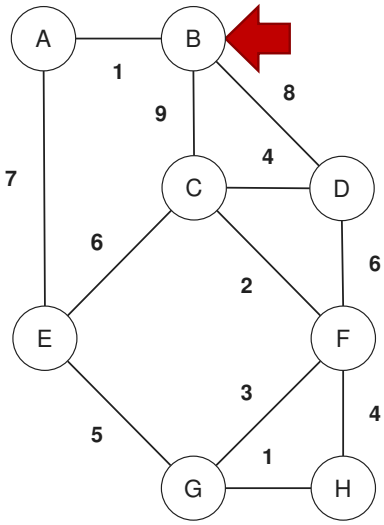

| Vertex | Best Path | Distance | Look |
|---|---|---|---|
| A | | ∞ | 0 + 1 |
| B | B | 0 | |
| C | | ∞ | 0 + 9 |
| D | | ∞ | 0 + 8 |
| E | | ∞ | |
| F | | ∞ | |
| G | | ∞ | |
| H | | ∞ | |

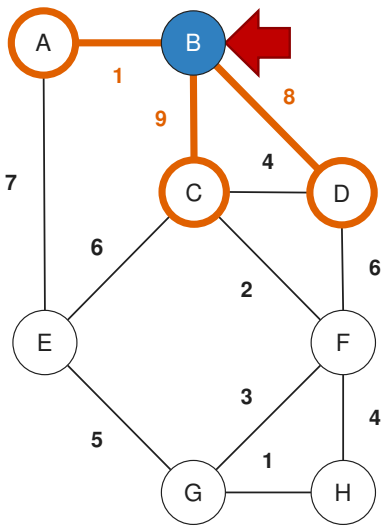


47

| Vertex | Best Path | Distance | Look |
|---|---|---|---|
| A | B A | 1 | 0 + 1 |
| B | B | 0 | |
| C | B C | 9 | 0 + 9 |
| D | B D | 8 | 0 + 8 |
| E | | ∞ | |
| F | | ∞ | |
| G | | ∞ | |
| H | | ∞ | |

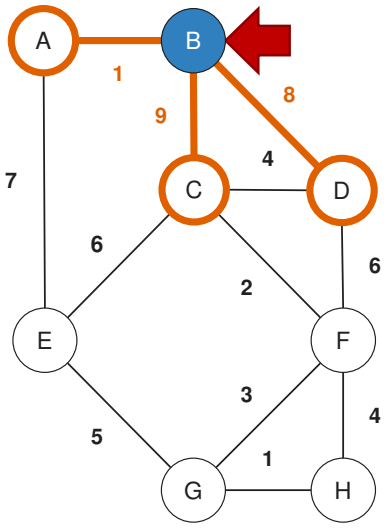


48

| Vertex | Best Path | Distance | Look |
|---|---|---|---|
| A | B A | 1 | |
| B | B | 0 | |
| C | B C | 9 | |
| D | B D | 8 | |
| E | | ∞ | |
| F | | ∞ | |
| G | | ∞ | |
| H | | ∞ | |

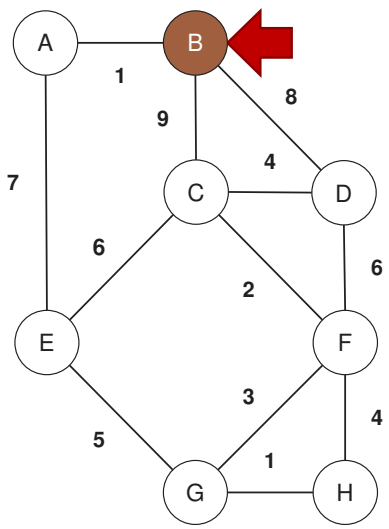




| Vertex | Best Path | Distance | Look |
|---|---|---|---|
| A | B A | 1 | |
| B | B | 0 | |
| C | B C | 9 | |
| D | B D | 8 | |
| E | | ∞ | 1 + 7 |
| F | | ∞ | |
| G | | ∞ | |
| H | | ∞ | |

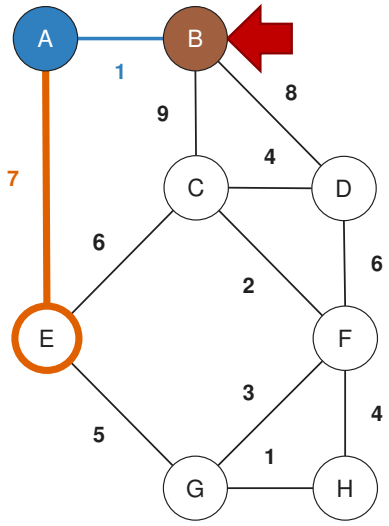

| Vertex | Best Path | Distance | Look |
|---|---|---|---|
| A | B A | 1 | |
| B | B | 0 | |
| C | B C | 9 | |
| D | B D | 8 | |
| E | B A E | 8 | 1 + 7 |
| F | | ∞ | |
| G | | ∞ | |
| H | | ∞ | |

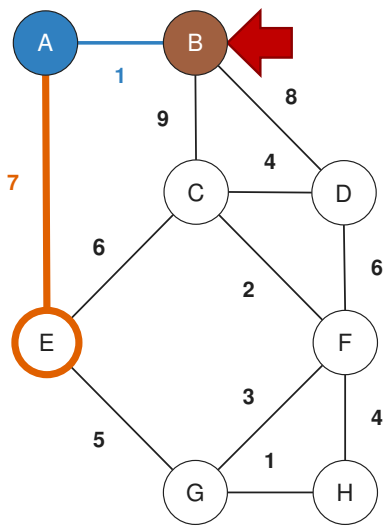


51

| Vertex | Best Path | Distance | Look |
|---|---|---|---|
| A | B A | 1 | |
| B | B | 0 | |
| C | B C | 9 | |
| D | B D | 8 | |
| E | B A E | 8 | |
| F | | ∞ | |
| G | | ∞ | |
| H | | ∞ | |

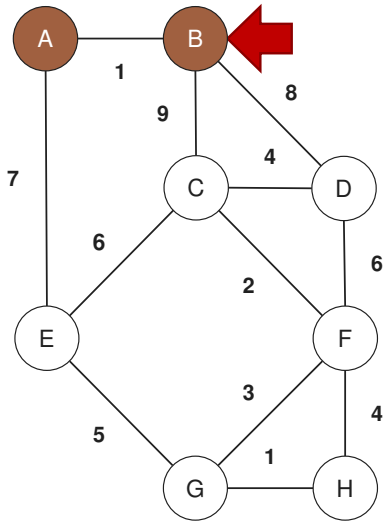


52

| Vertex | Best Path | Distance | Look |
|---|---|---|---|
| A | B A | 1 | |
| B | B | 0 | |
| C | B C | 9 | 8 + 4 |
| D | B D | 8 | |
| E | B A E | 8 | |
| F | | ∞ | 8 + 6 |
| G | | ∞ | |
| H | | ∞ | |

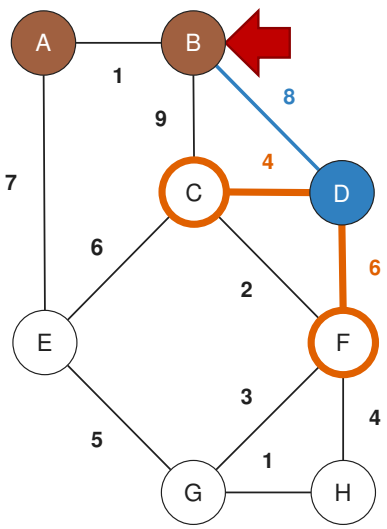


53

| Vertex | Best Path | Distance | Look |
|---|---|---|---|
| A | B A | 1 | |
| B | B | 0 | |
| C | B C | 9 | 8 + 4 |
| D | B D | 8 | |
| E | B A E | 8 | |
| F | B D F | 14 | 8 + 6 |
| G | | ∞ | |
| H | | ∞ | |

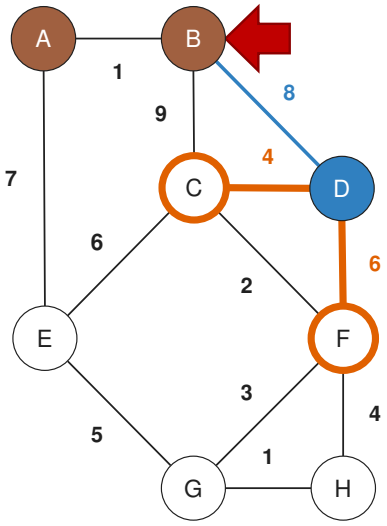


54

| Vertex | Best Path | Distance | Look |
|---|---|---|---|
| A | B A | 1 | |
| B | B | 0 | |
| C | B C | 9 | |
| D | B D | 8 | |
| E | B A E | 8 | |
| F | B D F | 14 | |
| G | | ∞ | |
| H | | ∞ | |

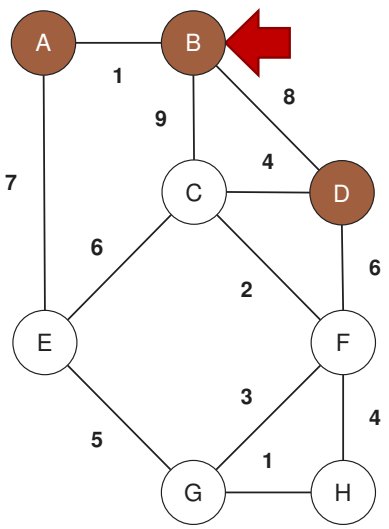




| Vertex | Best Path | Distance | Look |
|---|---|---|---|
| A | B A | 1 | |
| B | B | 0 | |
| C | B C | 9 | 8 + 6 |
| D | B D | 8 | |
| E | B A E | 8 | |
| F | B D F | 14 | |
| G | | ∞ | 8 + 5 |
| H | | ∞ | |

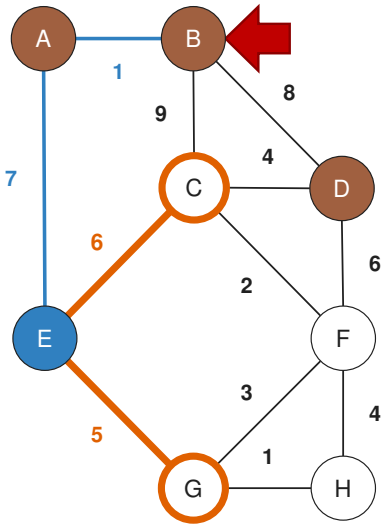

| Vertex | Best Path | Distance | Look |
|---|---|---|---|
| A | B A | 1 | |
| B | B | 0 | |
| C | B C | 9 | 8 + 6 |
| D | B D | 8 | |
| E | B A E | 8 | |
| F | B D F | 14 | |
| G | B A E G | 13 | 8 + 5 |
| H | | ∞ | |

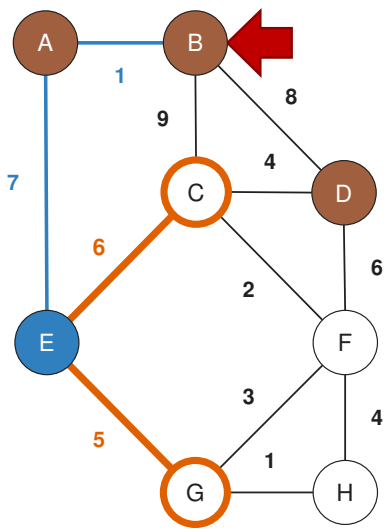


57

| Vertex | Best Path | Distance | Look |
|---|---|---|---|
| A | B A | 1 | |
| B | B | 0 | |
| C | B C | 9 | |
| D | B D | 8 | |
| E | B A E | 8 | |
| F | B D F | 14 | |
| G | B A E G | 13 | |
| H | | ∞ | |

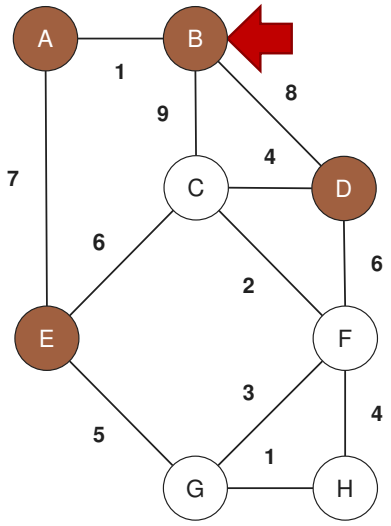


58

| Vertex | Best Path | Distance | Look |
|---|---|---|---|
| A | B A | 1 | |
| B | B | 0 | |
| C | B C | 9 | |
| D | B D | 8 | |
| E | B A E | 8 | |
| F | B D F | 14 | 9 + 2 |
| G | B A E G | 13 | |
| H | | ∞ | |

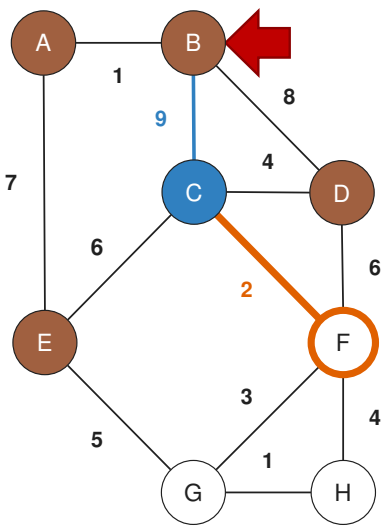


59

| Vertex | Best Path | Distance | Look |
|---|---|---|---|
| A | B A | 1 | |
| B | B | 0 | |
| C | B C | 9 | |
| D | B D | 8 | |
| E | B A E | 8 | |
| F | B C F | 11 | 9 + 2 |
| G | B A E G | 13 | |
| H | | ∞ | |

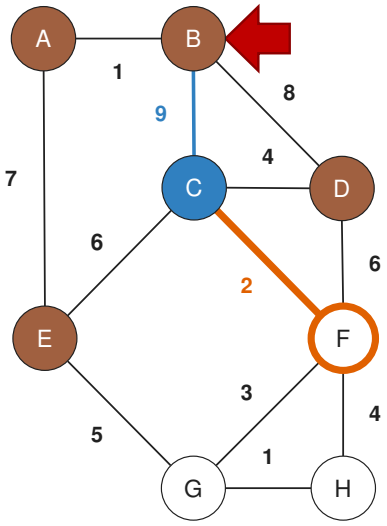


60

| Vertex | Best Path | Distance | Look |
|---|---|---|---|
| A | B A | 1 | |
| B | B | 0 | |
| C | B C | 9 | |
| D | B D | 8 | |
| E | B A E | 8 | |
| F | B C F | 11 | |
| G | B A E G | 13 | |
| H | | ∞ | |

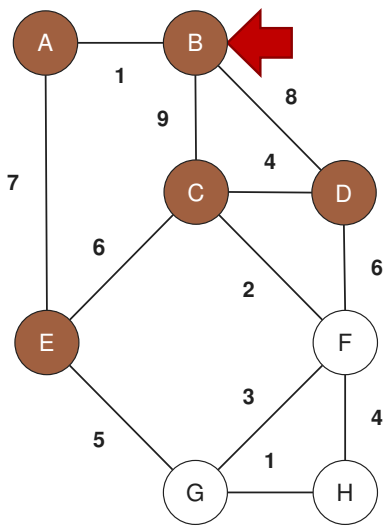


61

| Vertex | Best Path | Distance | Look |
|---|---|---|---|
| A | B A | 1 | |
| B | B | 0 | |
| C | B C | 9 | |
| D | B D | 8 | |
| E | B A E | 8 | |
| F | B C F | 11 | |
| G | B A E G | 13 | 11 + 3 |
| H | | ∞ | 11 + 4 |

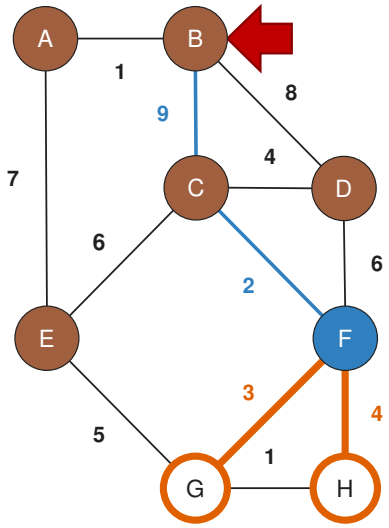


62

| Vertex | Best Path | Distance | Look |
|---|---|---|---|
| A | B A | 1 | |
| B | B | 0 | |
| C | B C | 9 | |
| D | B D | 8 | |
| E | B A E | 8 | |
| F | B C F | 11 | |
| G | B A E G | 13 | 11 + 3 |
| H | B C F H | 15 | 11 + 4 |

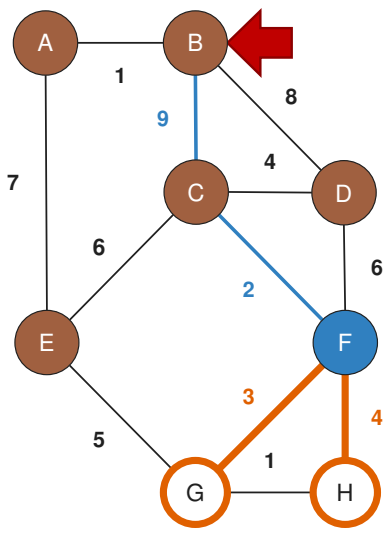


63

| Vertex | Best Path | Distance | Look |
|---|---|---|---|
| A | B A | 1 | |
| B | B | 0 | |
| C | B C | 9 | |
| D | B D | 8 | |
| E | B A E | 8 | |
| F | B C F | 11 | |
| G | B A E G | 13 | |
| H | B C F H | 15 | |

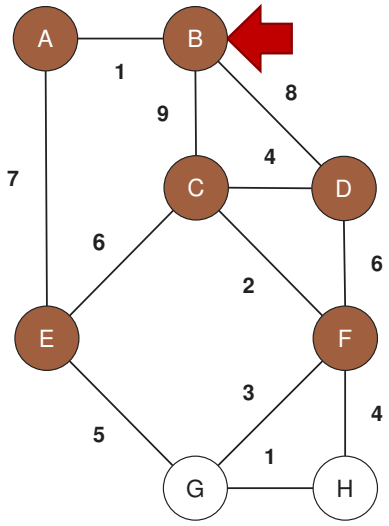


64

| Vertex | Best Path | Distance | Look |
|---|---|---|---|
| A | B A | 1 | |
| B | B | 0 | |
| C | B C | 9 | |
| D | B D | 8 | |
| E | B A E | 8 | |
| F | B C F | 11 | |
| G | B A E G | 13 | |
| H | B C F H | 15 | 13 + 1 |

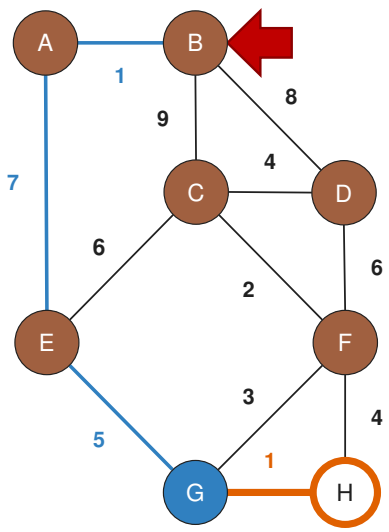


65

| Vertex | Best Path | Distance | Look |
|---|---|---|---|
| A | B A | 1 | |
| B | B | 0 | |
| C | B C | 9 | |
| D | B D | 8 | |
| E | B A E | 8 | |
| F | B C F | 11 | |
| G | B A E G | 13 | |
| H | B A E G H | 14 | 13 + 1 |

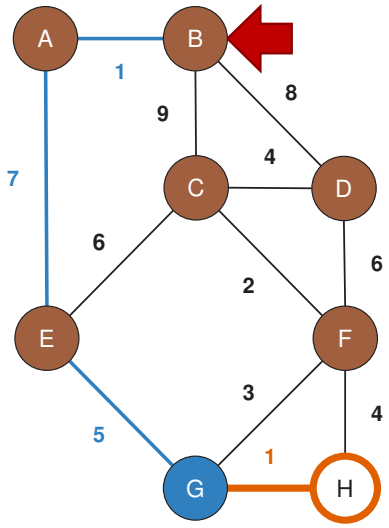


66

| Vertex | Best Path | Distance | Look |
|---|---|---|---|
| A | B A | 1 | |
| B | B | 0 | |
| C | B C | 9 | |
| D | B D | 8 | |
| E | B A E | 8 | |
| F | B C F | 11 | |
| G | B A E G | 13 | |
| H | B A E G H | 14 | |

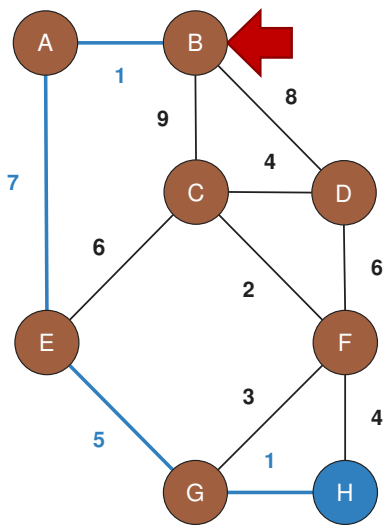



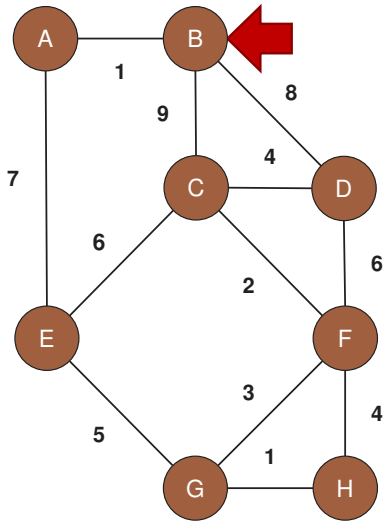
| Vertex | Best Path | Distance |
|---|---|---|
| A | B A | 1 |
| B | B | 0 |
| C | B C | 9 |
| D | B D | 8 |
| E | B A E | 8 |
| F | B C F | 11 |
| G | B A E G | 13 |
| H | B A E G H | 14 |