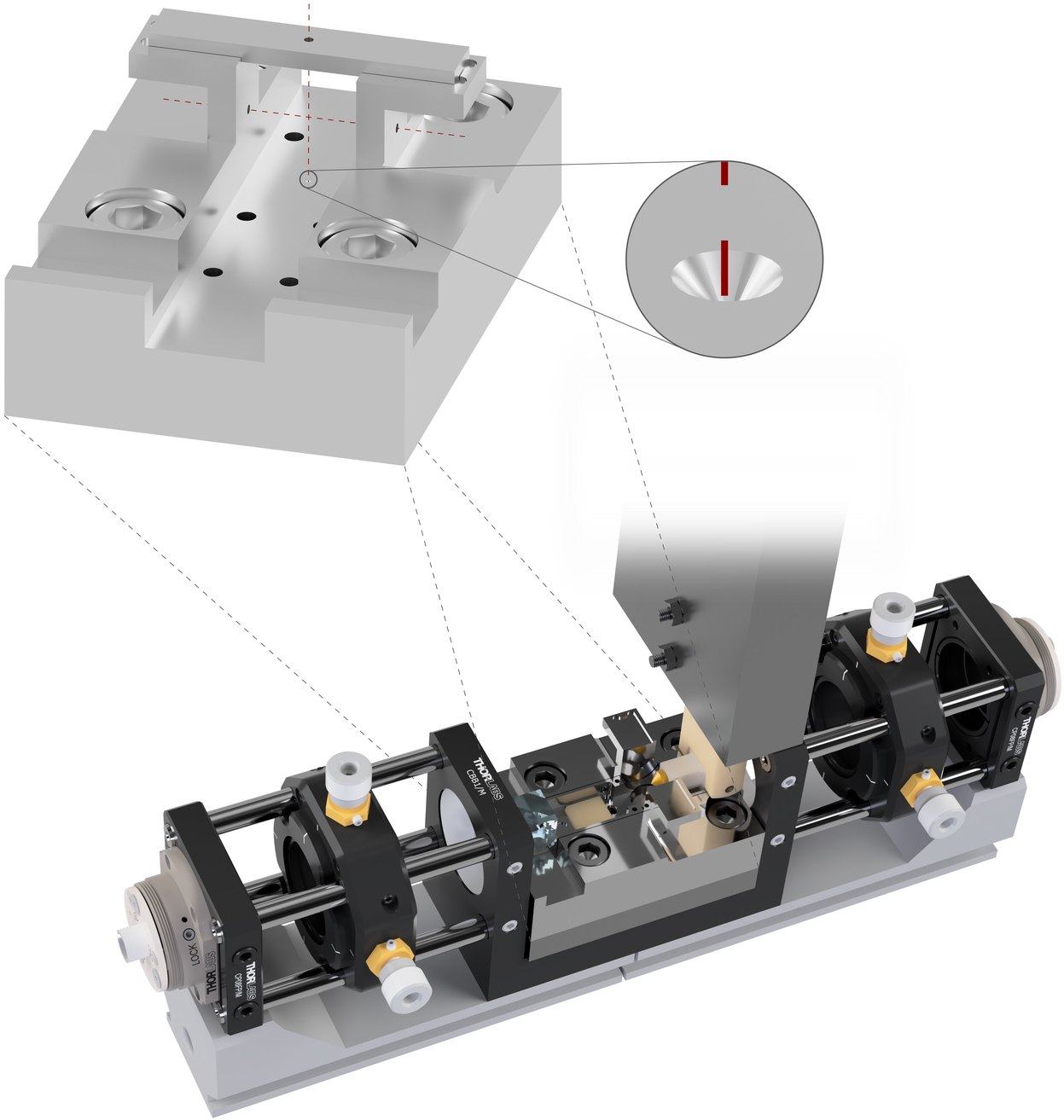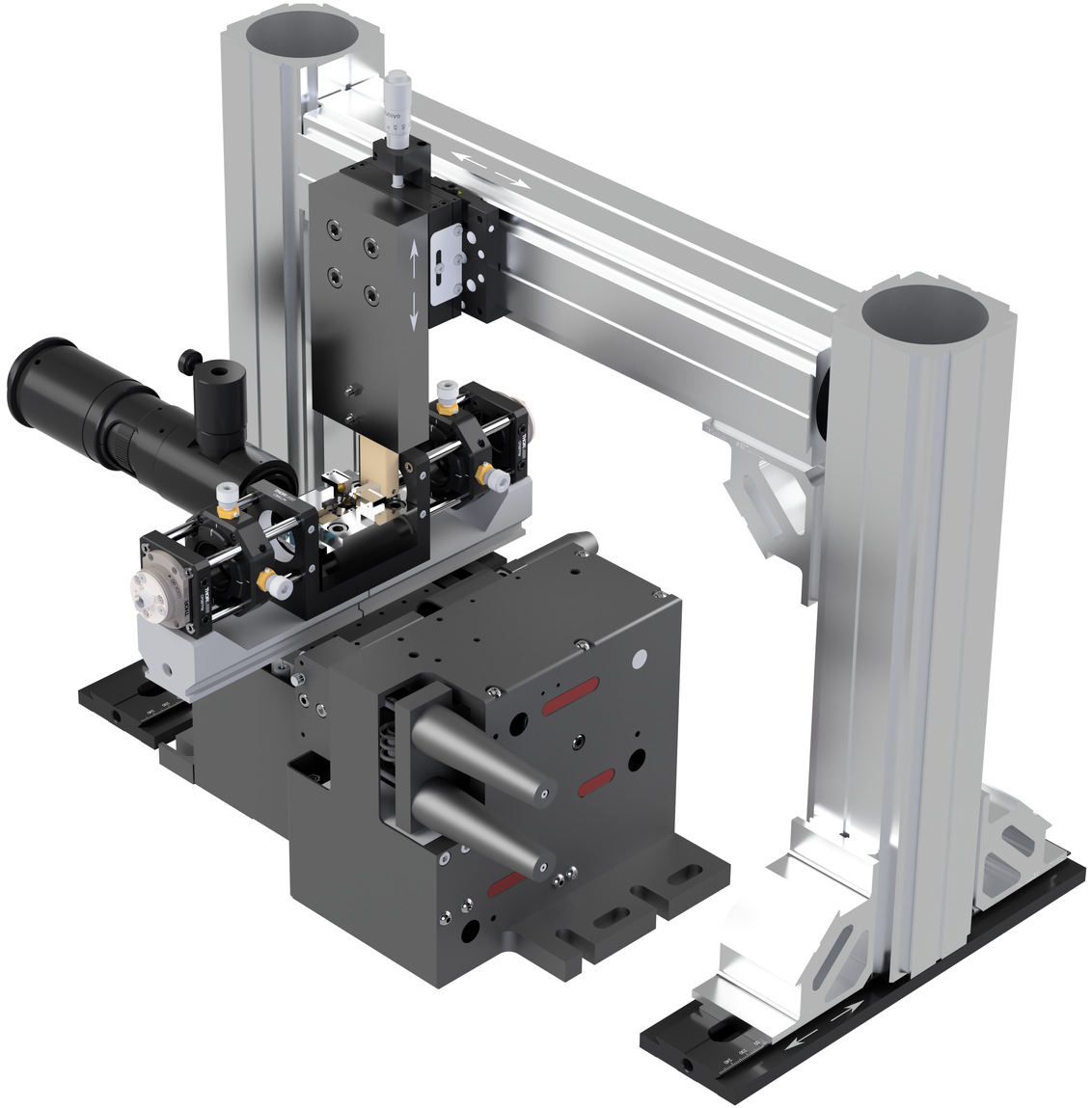
THORLABS
CEB1/M
THORLABS
CMFP1N
LOCK
THORLABS
CMFP1N
THORLABS
CMFP1N