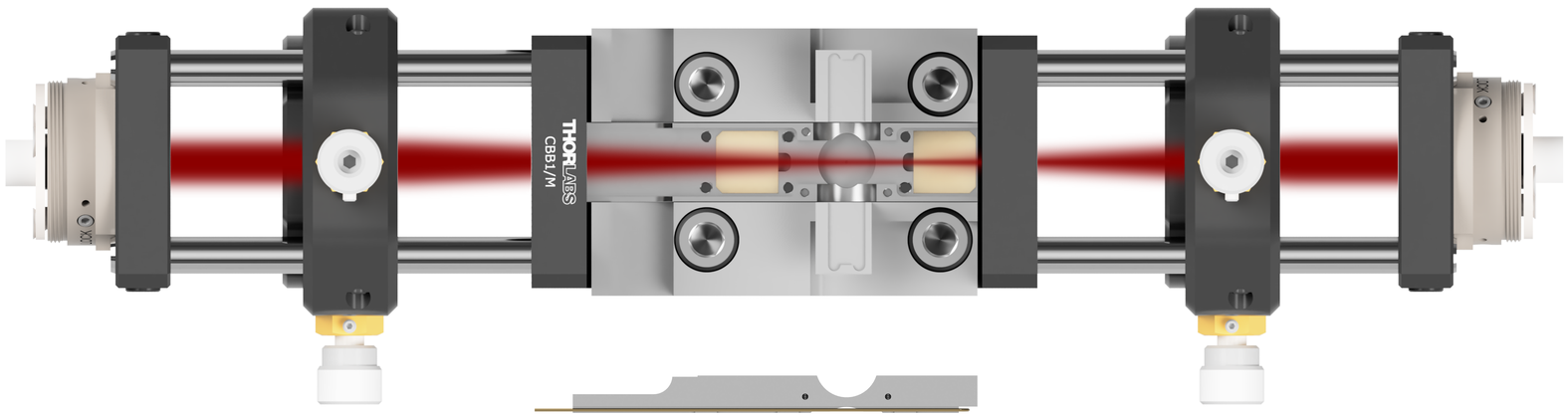
THORLABS
CBB1/M

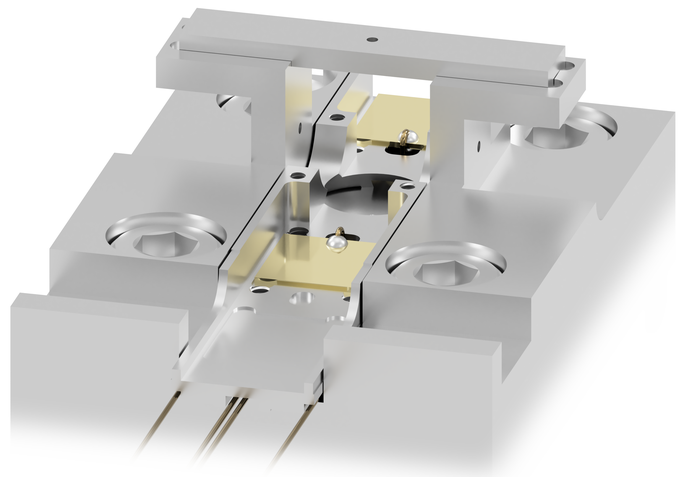

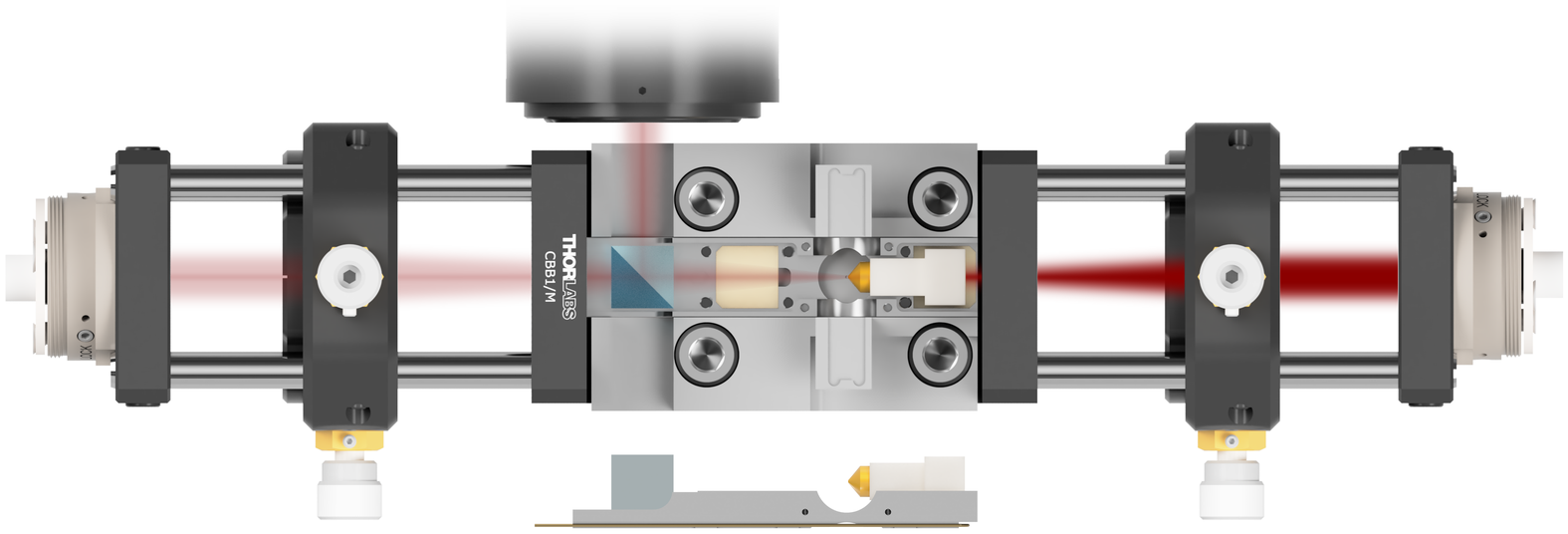
THORLABS
CBB1/M

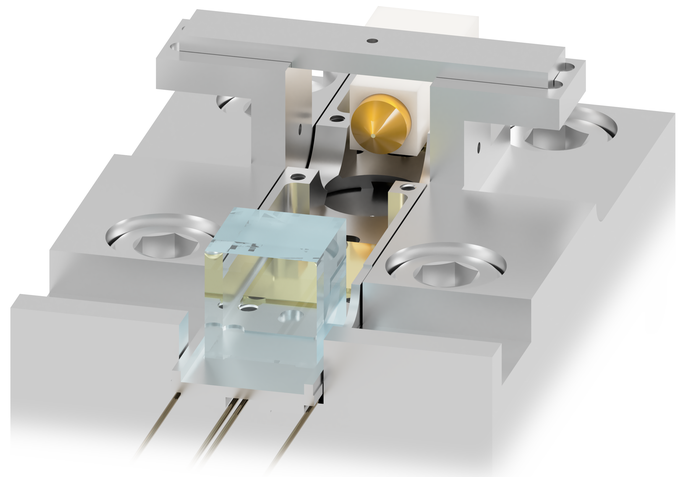

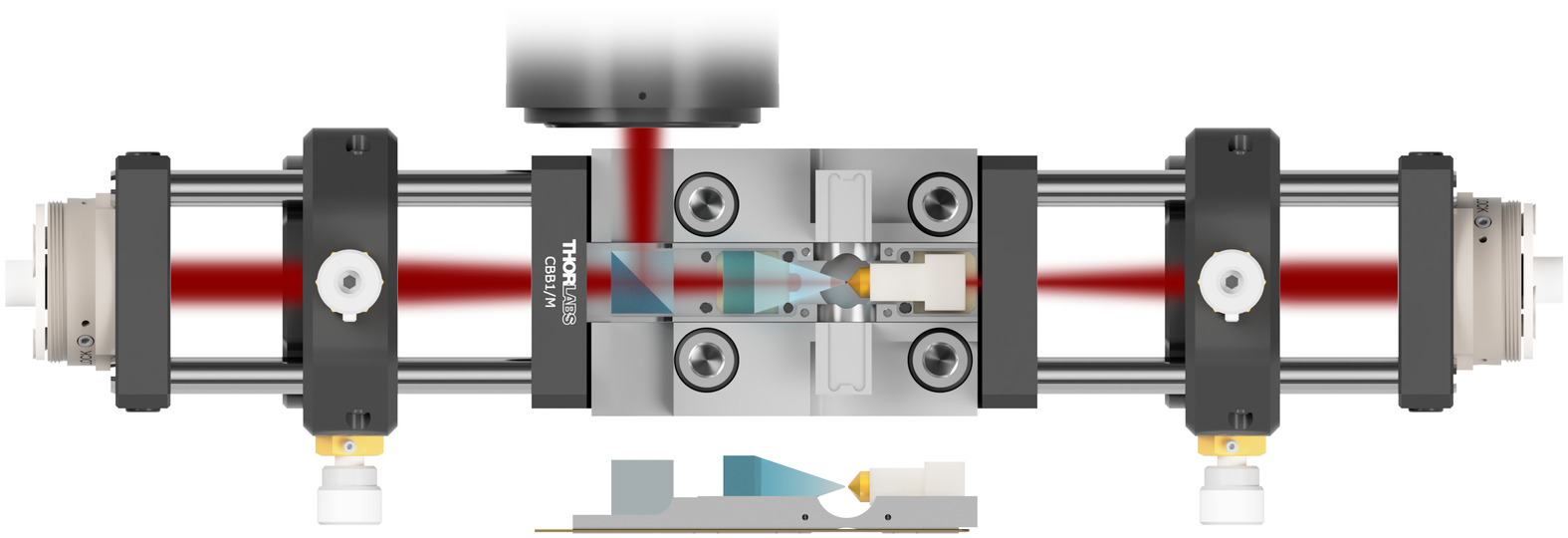
THORLABS
CBB1/M

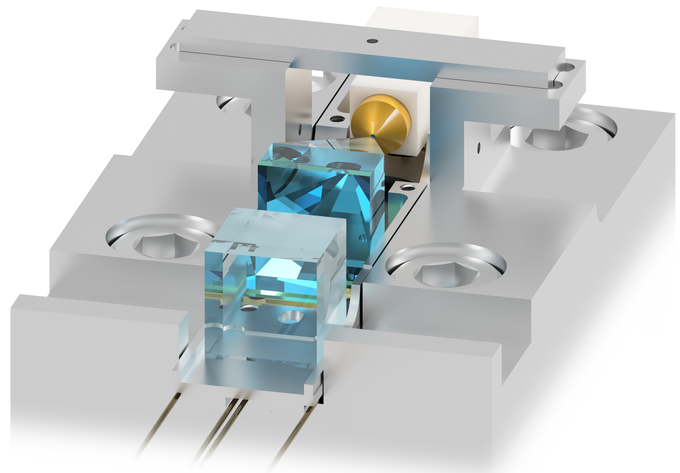

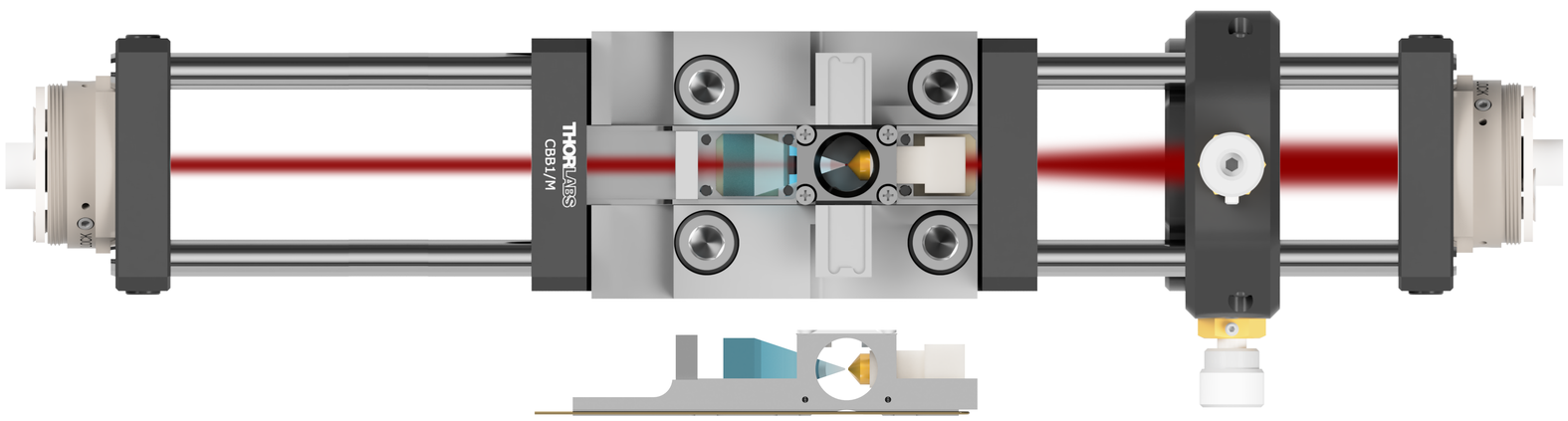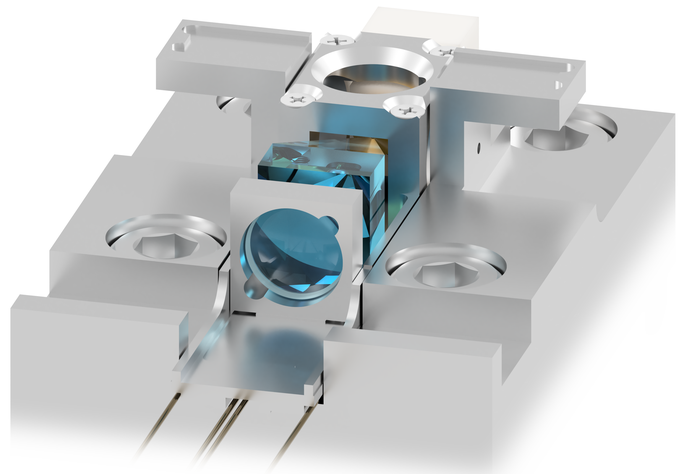
THORLABS
CBB1/M