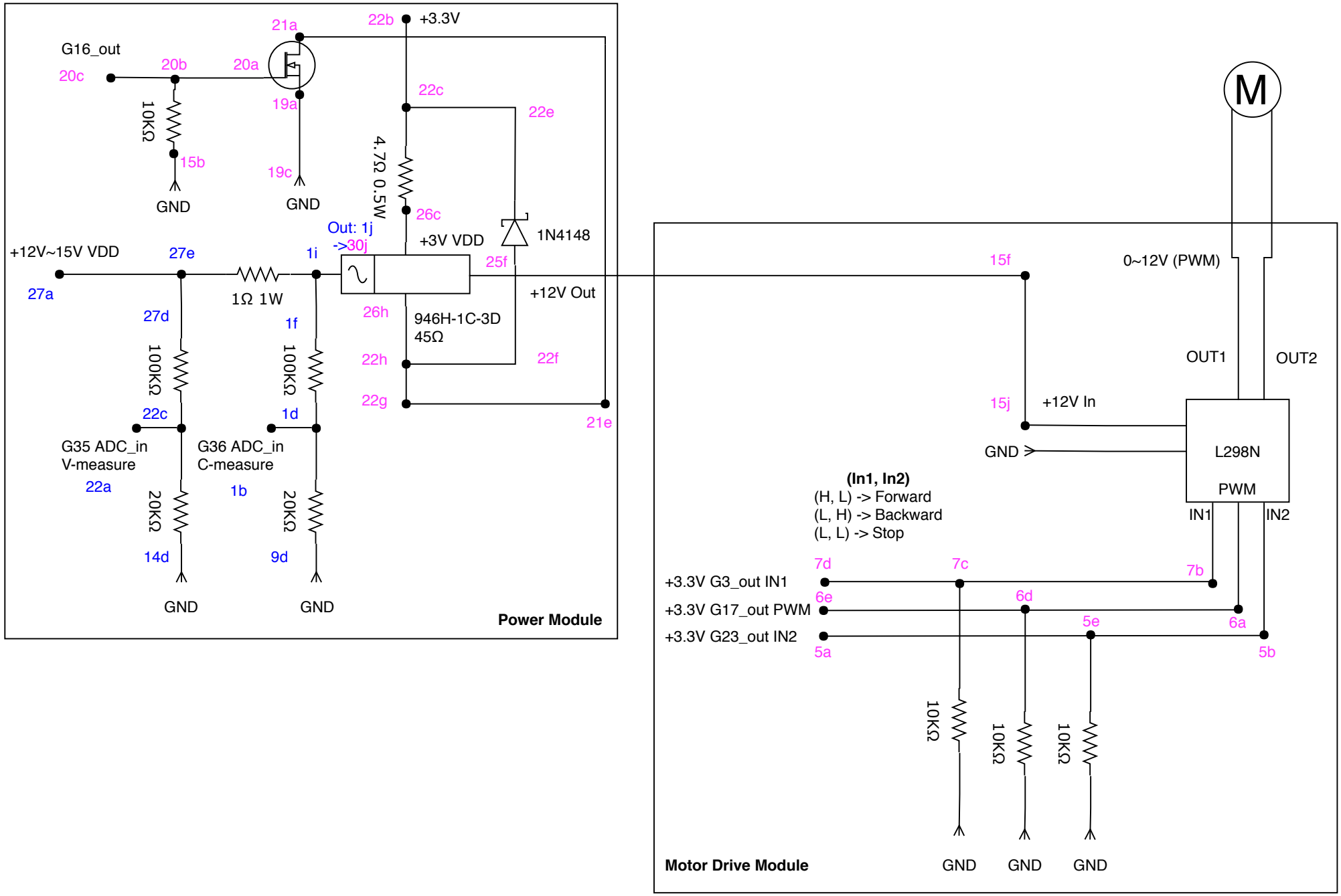
G16_out
20c
20b
20a
21a
22b
+3.3V
19a
10KΩ
15b
19c
GND
GND
22c
22e
4.7Ω 0.5W
26c
Out: 1j
->30j
+3V VDD
1N4148
+12V~15V VDD
27e
1i
25f
27a
1Ω 1W
+12V Out
27d
1f
26h
946H-1C-3D
45Ω
100KΩ
100KΩ
22h
22f
22c
1d
22g
21e
G35 ADC_in
V-measure
G36 ADC_in
C-measure
22a
1b
20KΩ
20KΩ
14d
9d
GND
GND
Power Module
M
15f
0~12V (PWM)
OUT1
OUT2
15j
+12V In
GND
L298N
PWM
IN1
IN2
(In1, In2)
(H, L) -> Forward
(L, H) -> Backward
(L, L) -> Stop
7d
7c
7b
+3.3V G3_out IN1
6e
6d
+3.3V G17_out PWM
5e
6a
+3.3V G23_out IN2
5a
5b
10KΩ
10KΩ
10KΩ
Motor Drive Module
GND
GND
GND