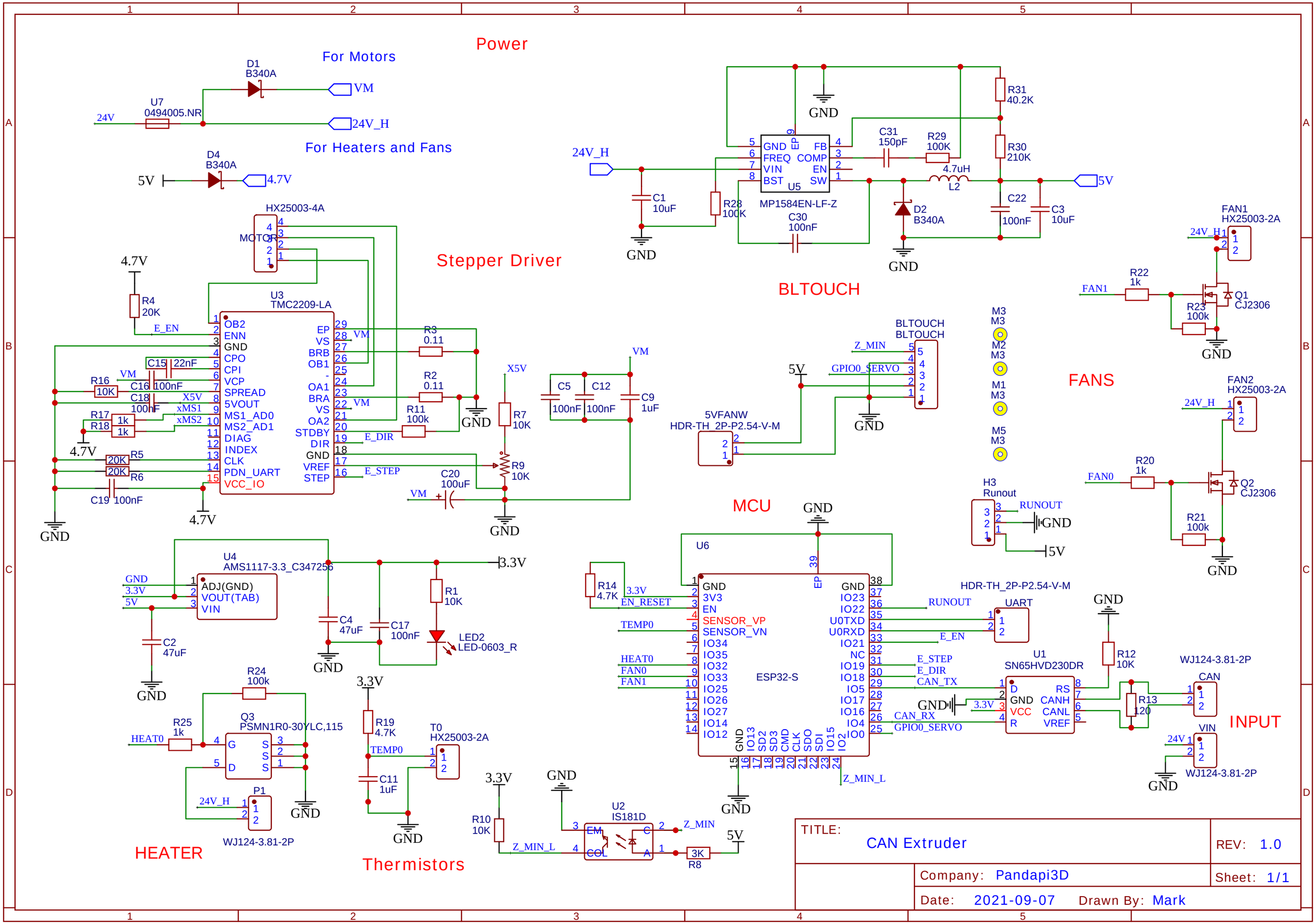

TITLE: CAN Extruder

REV: 1.0

Company: Pandapi3D

Sheet: 1/1

Date: 2021-09-07

Drawn By: Mark