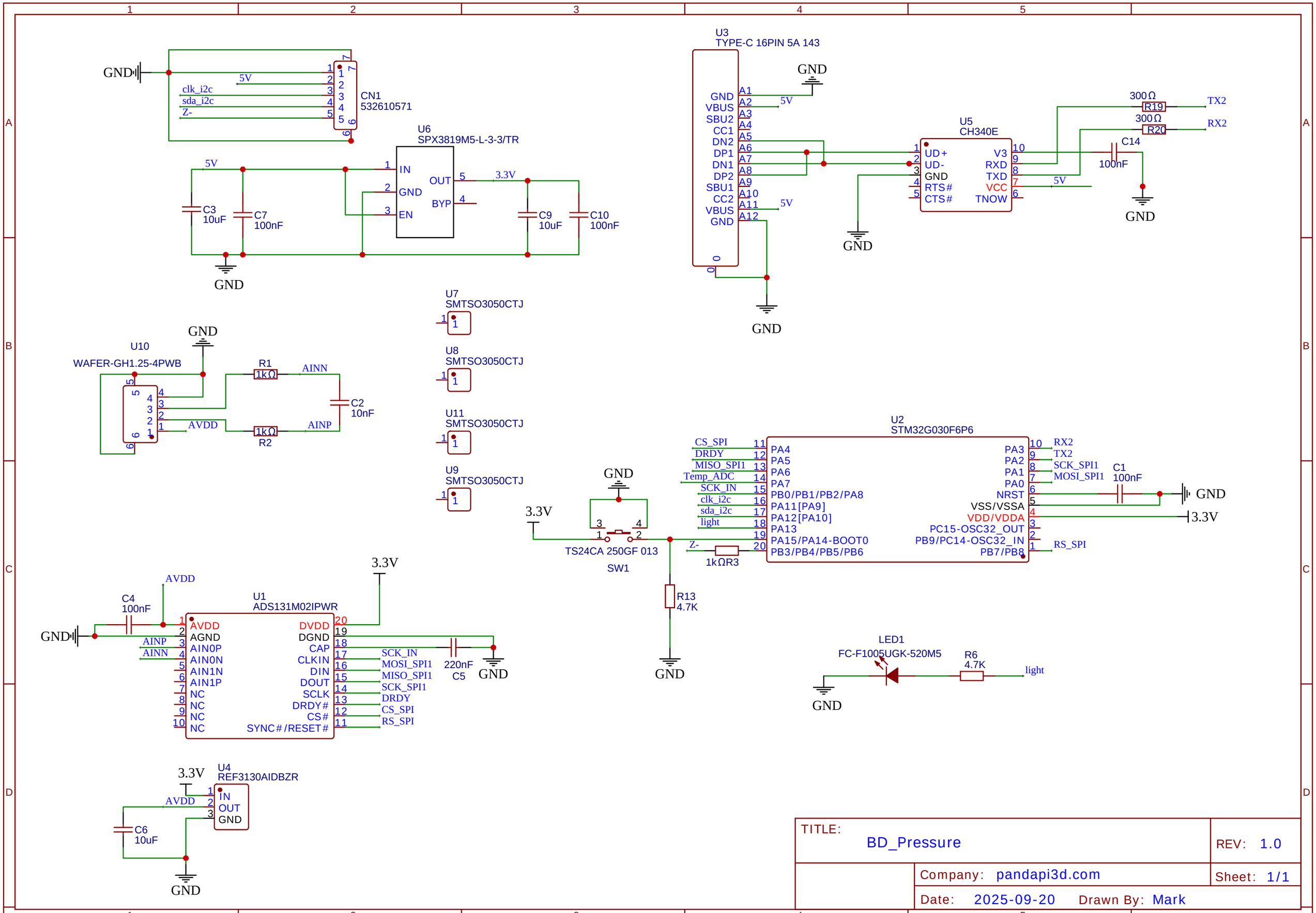
CN1
532610571
clk_i2c
sda_i2c
Z-
5V
GND
U6
SPX3819M5-L-3-3/TR
IN
GND
EN
OUT
BYP
3.3V
C3
10uF
C7
100nF
C9
10uF
C10
100nF
U3
TYPE-C 16PIN 5A 143
GND
VBUS
SBU2
CC1
DN2
DP1
DN1
DP2
SBU1
CC2
A1
A2
A3
A4
A5
A6
A7
A8
A9
A10
A11
A12
U5
CH340E
UD+
UD-
RTS#
CTS#
V3
RXD
TXD
VCC
TNOW
300Ω
R19
R20
TX2
RX2
C14
100nF
U7
SMTSO3050CTJ
U8
SMTSO3050CTJ
U11
SMTSO3050CTJ
U9
SMTSO3050CTJ
U10
WAFER-GH1.25-4PWB
R1
1kΩ
R2
1kΩ
AINN
AINP
AVDD
C2
10nF
U2
STM32G030F6P6
CS_SPI
DRDY
MISO_SPI1
Temp_ADC
SCK_IN
clk_i2c
sda_i2c
light
Z-
PA4
PA5
PA6
PA7
PB0/PB1/PB2/PA8
PA11[PA9]
PA12[PA10]
PA13
PA15/PA14-BOOT0
PB3/PB4/PB5/PB6
PA3
PA2
PA1
PA0
NRST
VSS/VSSA
VDD/VDDA
PC15-OSC32_OUT
PB9/PC14-OSC32_IN
PB7/PB8
SCK_SPI1
MOSI_SPI1
RS_SPI
C1
100nF
TS24CA 250GF 013
SW1
1kΩR3
R13
4.7K
U1
ADS131M02IPWR
C4
100nF
AVDD
AGND
AIN0P
AIN0N
AIN1N
AIN1P
NC
DVDD
DGND
CAP
CLKIN
DIN
DOUT
SCLK
DRDY#
CS#
SYNC#/RESET#
220nF
C5
LED1
FC-F1005UGK-520M5
R6
4.7K
U4
REF3130AIDBZR
IN
OUT
C6
10uF
TITLE:
BD_Pressure
REV: 1.0
Company: pandapi3d.com
Sheet: 1/1
Date: 2025-09-20
Drawn By: Mark