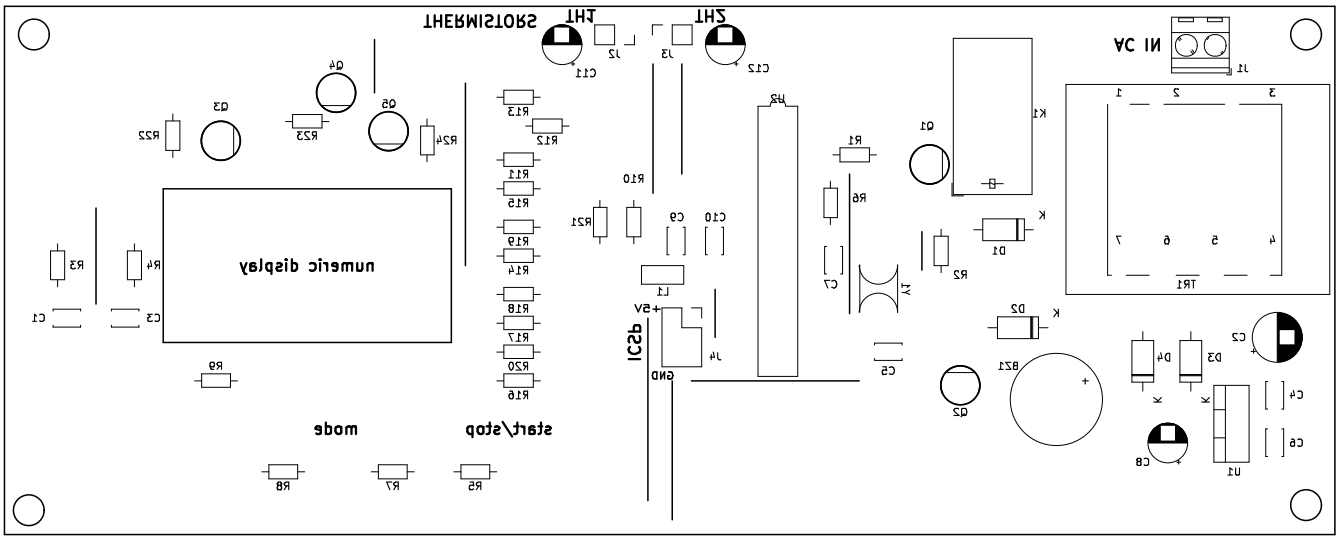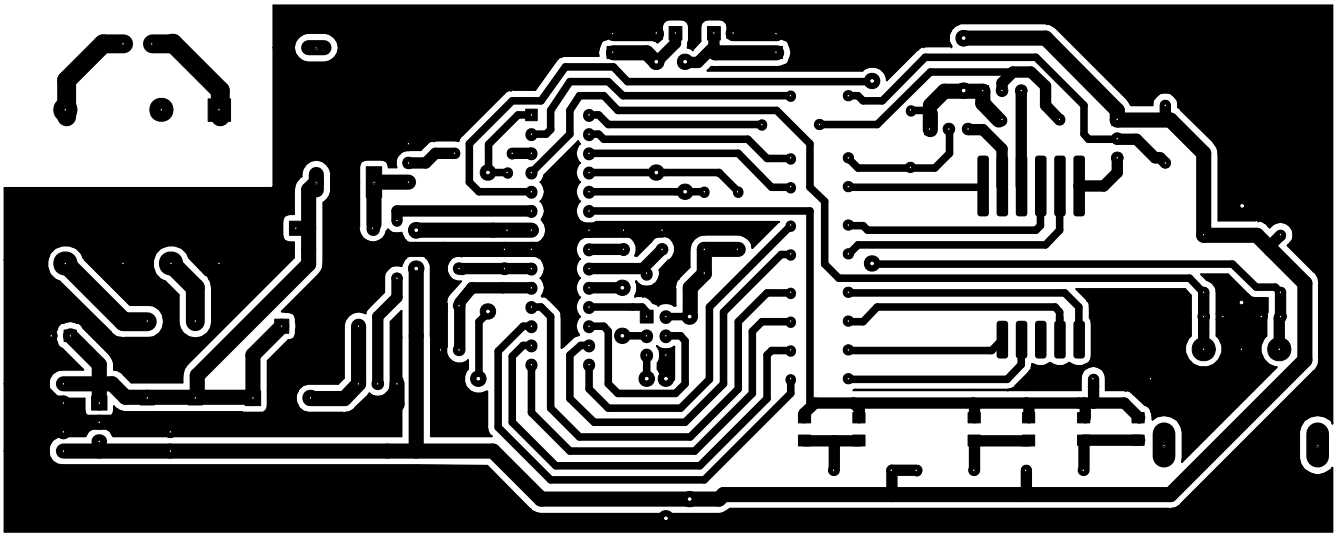
IN 3V
J1
TR1
K1
Q1
D1
R1
R2
R6
C7
Y1
C5
D2
B21
Q2
C2
D3
D4
C4
C6
U1
C8
U2
C12
J3
ZH1
TH1
SRDISWRHT
J2
C11
Q4
Q5
Q3
R22
R23
R24
R13
R12
R10
R21
C10
C9
R11
R15
R9
R14
R18
R17
R20
R16
L1
+5V
J4
GND
IC5b
numeric display
R3
R4
C1
C3
R9
start\stop
mode
R8
R7
R5