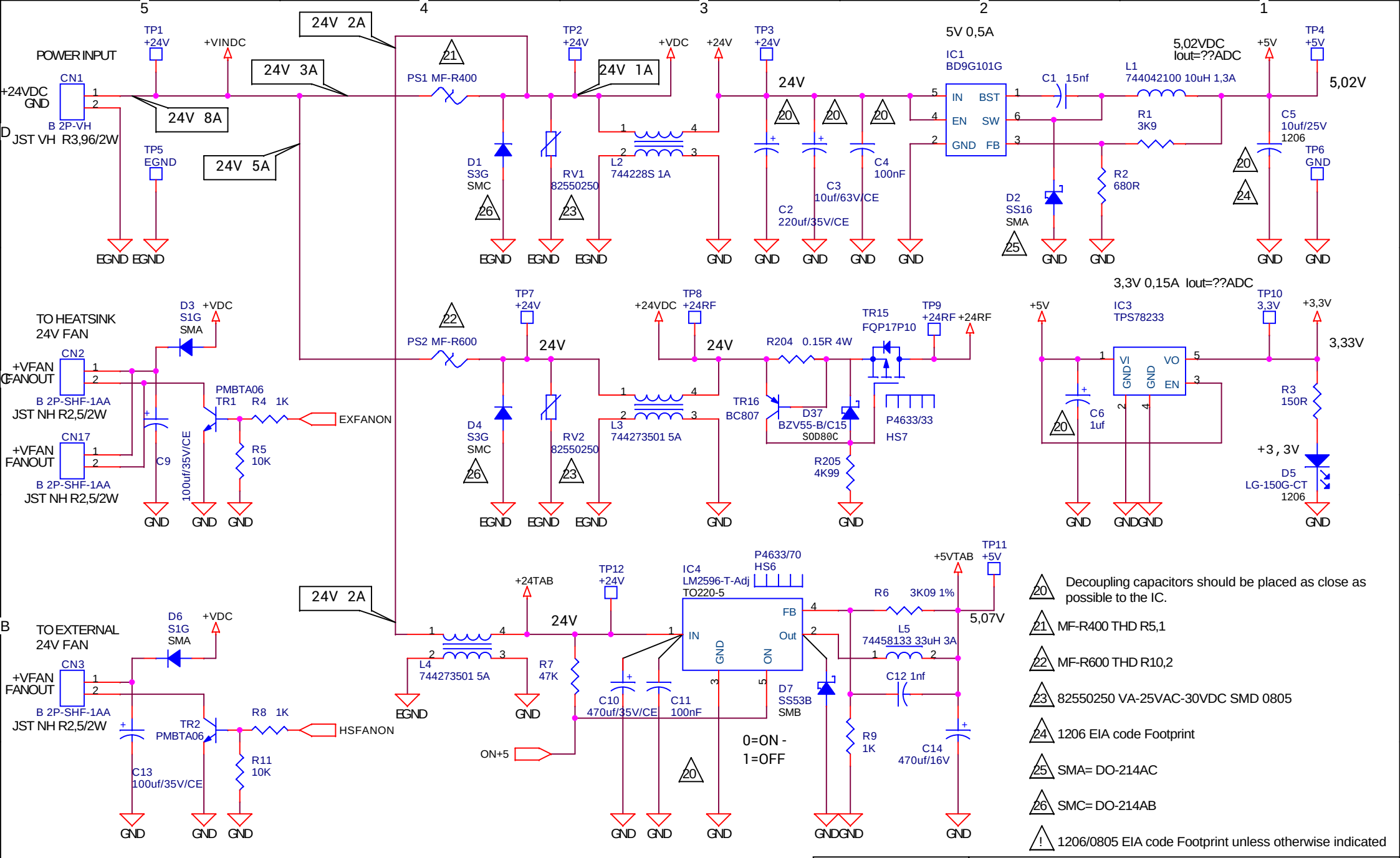

20 Decoupling capacitors should be placed as close as possible to the IC.

21 MF-R400 THD R5,1

22 MF-R600 THD R10,2

23 82550250 VA-25VAC-30VDC SMD 0805

24 1206 EIA code Footprint

25 SMA= DO-214AC

26 SMC= DO-214AB

! 1206/0805 EIA code Footprint unless otherwise indicated

A MESOTREAT

02

GND = GROUND
EGND = EXTERNAL GND

+24V = +24VDC Power supply
+24RF = +24VDC RF Power supply

+5V TAB = +5VDC IN TAB

ingenia engineering + wit
Ronda Can Rabadà Nº2, 5º 2ª
Edifici LOGIC - 08860 Castelldefels
Barcelona, SPAIN
Telf. 647 386 520
www.ingenia64.com

Document Number: 02 - Power Supply			
SCH version: SCH0044001		Size: A4	Sheet: 2 of 15
PCB model: PCB0044001		Project / Product: PJT0028 - MESOTREAT	
Date: Wednesday, August 16, 2017		Drawed by Rafael Vilella	