Project Summary
Entire House
e3 Power

Job: 275 Hollbrook St
Date: Dec 24, 2022
By: Andy Wildenberg

181 E 56th Ave #600, Denver, CO 80216 Phone: 303-292-1233 Email: andy@e3power.net Web: www.e3power.net

Project Information

For: ADU 275 Hollbrook St
275 Hollbrook St, Erie, CO

Notes: ASHRAE 62.2-2010- Exhaust only ventilation is automatically calculated by the software.

Design Information

Weather: Denver Intl AP, CO, US

Winter Design Conditions

Outside db	***1***	°F
Inside db	70	°F
Design TD	69	°F

Summer Design Conditions

Outside db	***91***	°F
Inside db	75	°F
Design TD	16	°F
Daily range	H	
Relative humidity	50	%
Moisture difference	-34	gr/lb

Heating Summary

Structure	16718	Btuh
Ducts	3998	Btuh
Central vent (39 cfm)	2437	Btuh
Outside air		
Humidification	0	Btuh
Piping	0	Btuh
Equipment load	23154	Btuh

Infiltration

Method	Simplified
Construction quality	Semi-tight
Fireplaces	0

	Heating	Cooling
Area (ft²)	879	879
Volume (ft³)	7983	7983
Air changes/hour	0.53	0.28
Equiv. AVF (cfm)	72	38

Sensible Cooling Equipment Load Sizing

Structure	8531	Btuh
Ducts	3366	Btuh
Central vent (39 cfm)	565	Btuh
Outside air		
Blower	1707	Btuh
Use manufacturer's data	y	
Rate/swing multiplier	1.00	
Equipment sensible load	14169	Btuh

Latent Cooling Equipment Load Sizing

Structure	64	Btuh
Ducts	-149	Btuh
Central vent (39 cfm)	-752	Btuh
Outside air		
Equipment latent load	0	Btuh
Equipment Total Load (Sen+Lat)	14169	Btuh
Req. total capacity at 0.80 SHR	1.5	ton

Heating Equipment Summary

Make	Goodman Mfg.
Trade	GOODMAN
Model	GMES800403AN
AHRI ref	203401015

Efficiency	80	AFUE
Heating input	40000	Btuh
Heating output	25600	Btuh
Temperature rise	45	°F
Actual air flow	631	cfm
Air flow factor	0.030	cfm/Btuh
Static pressure	0.80	in H2O
Space thermostat		

Cooling Equipment Summary

Make	Goodman Mfg.
Trade	GOODMAN
Cond	GSX130181E
Coil	CAPT3131A4A
AHRI ref	201472079

Efficiency	11.0 EER, 13 SEER	
Sensible cooling	13920	Btuh
Latent cooling	3480	Btuh
Total cooling	17400	Btuh
Actual air flow	631	cfm
Air flow factor	0.053	cfm/Btuh
Static pressure	0.80	in H2O
Load sensible heat ratio	1.00	

Bold/italic values have been manually overridden

Calculations approved by ACCA to meet all requirements of Manual J 8th Ed.

Load Short Form
Entire House
e3 Power

Job: 275 Hollbrook St
Date: Dec 24, 2022
By: Andy Wildenberg

181 E 56th Ave #600, Denver, CO 80216 Phone: 303-292-1233 Email: andy@e3power.net Web: www.e3power.net

Project Information

For: ADU 275 Hollbrook St
275 Hollbrook St, Erie, CO

Design Information

	Htg	Clg
Outside db (°F)	***1***	***91***
Inside db (°F)	70	75
Design TD (°F)	69	16
Daily range	-	H
Inside humidity (%)	50	50
Moisture difference (gr/lb)	61	-34

Infiltration

Method	Simplified
Construction quality	Semi-tight
Fireplaces	0

HEATING EQUIPMENT

Make	Goodman Mfg.
Trade	GOODMAN
Model	GMES800403AN
AHRI ref	203401015

Efficiency	80 AFUE	
Heating input	40000	Btuh
Heating output	25600	Btuh
Temperature rise	45	°F
Actual air flow	631	cfm
Air flow factor	0.030	cfm/Btuh
Static pressure	0.80	in H2O
Space thermostat		

COOLING EQUIPMENT

Make	Goodman Mfg.
Trade	GOODMAN
Cond	GSX130181E
Coil	CAPT3131A4A
AHRI ref	201472079

Efficiency	11.0 EER, 13 SEER	
Sensible cooling	13920	Btuh
Latent cooling	3480	Btuh
Total cooling	17400	Btuh
Actual air flow	631	cfm
Air flow factor	0.053	cfm/Btuh
Static pressure	0.80	in H2O
Load sensible heat ratio	1.00	

ROOM NAME	Area (ft²)	Htg load (Btuh)	Clg load (Btuh)	Htg AVF (cfm)	Clg AVF (cfm)
Stairs	77	2860	274	87	15
Bed 1	133	3375	1424	103	76
W/D	11	0	0	0	0
Master Bed	194	4023	1694	123	90
Hall	56	0	0	0	0
Master Ba	42	1509	623	46	33
Bath 1	47	808	437	25	23
Kitchen	108	1801	2867	55	152
Great	171	6341	4578	193	243
Stair 1	42	0	0	0	0

Bold/italic values have been manually overridden

Calculations approved by ACCA to meet all requirements of Manual J 8th Ed.

Entire House	879	20717	11897	631	631
Other equip loads		2437	2272		
Equip. @ 1.00 RSM			14169		
Latent cooling			0		
TOTALS	879	23154	14169	631	631

Bold/italic values have been manually overridden

Calculations approved by ACCA to meet all requirements of Manual J 8th Ed.

Building Analysis
Entire House
e3 Power

Job: 275 Hollbrook St
Date: Dec 24, 2022
By: Andy Wildenberg

181 E 56th Ave #600, Denver, CO 80216 Phone: 303-292-1233 Email: andy@e3power.net Web: www.e3power.net

Project Information

For: ADU 275 Hollbrook St
275 Hollbrook St, Erie, CO

Design Conditions

Location:
Denver Intl AP, CO, US
Elevation: ***5130*** ft
Latitude: 40°N

Outdoor:	**Heating**	**Cooling**
Dry bulb (°F)	***1***	***91***
Daily range (°F)	-	27 (H)
Wet bulb (°F)	-	60
Wind speed (mph)	15.0	7.5

Indoor:	**Heating**	**Cooling**
Indoor temperature (°F)	70	75
Design TD (°F)	69	16
Relative humidity (%)	50	50
Moisture difference (gr/lb)	60.7	-34.4

Infiltration:

Method	Simplified
Construction quality	Semi-tight
Fireplaces	0

Heating

Component	Btuh/ft²	Btuh	% of load
Walls	4.2	5861	25.3
Glazing	20.7	2712	11.7
Doors	0	0	0
Ceilings	1.4	1180	5.1
Floors	2.9	2438	10.5
Infiltration	3.8	4528	19.6
Ducts		3998	17.3
Piping		0	0
Humidification		0	0
Ventilation		2437	10.5
Adjustments		0	
Total		**23154**	**100.0**

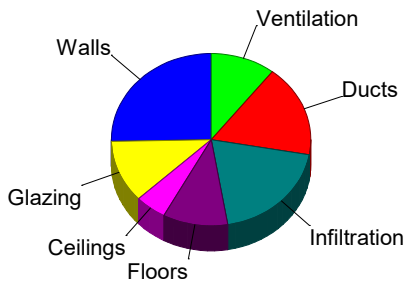

Cooling

Component	Btuh/ft²	Btuh	% of load
Walls	0.9	1297	9.2
Glazing	16.5	2160	15.2
Doors	0	0	0
Ceilings	1.0	809	5.7
Floors	0.2	192	1.4
Infiltration	0.5	553	3.9
Ducts		3366	23.8
Ventilation		565	4.0
Internal gains		3520	24.8
Blower		1707	12.0
Adjustments		0	
Total		**14169**	**100.0**

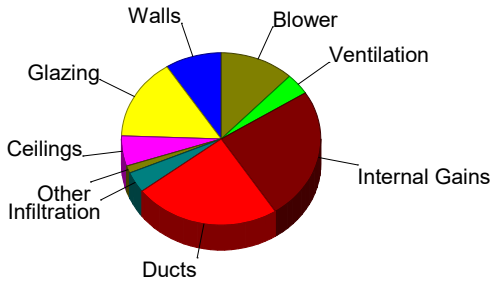

Latent Cooling Load = 0 Btuh
Overall U-value = 0.055 Btuh/ft²-°F

Data entries checked.

Bold/italic values have been manually overridden

Component Constructions
Entire House
e3 Power

Job: 275 Hollbrook St
Date: Dec 24, 2022
By: Andy Wildenberg

181 E 56th Ave #600, Denver, CO 80216 Phone: 303-292-1233 Email: andy@e3power.net Web: www.e3power.net

Project Information

For: ADU 275 Hollbrook St
275 Hollbrook St, Erie, CO

Design Conditions

Location:
Denver Intl AP, CO, US
Elevation: 5130 ft
Latitude: 40°N

Outdoor:	**Heating**	**Cooling**
Dry bulb (°F)	***1***	***91***
Daily range (°F)	-	27 (H)
Wet bulb (°F)	-	60
Wind speed (mph)	15.0	7.5

Indoor:	**Heating**	**Cooling**
Indoor temperature (°F)	70	75
Design TD (°F)	69	16
Relative humidity (%)	50	50
Moisture difference (gr/lb)	60.7	-34.4

Infiltration:	
Method	Simplified
Construction quality	Semi-tight
Fireplaces	0

Construction descriptions	**Or**	**Area** ft²	**U-value** Btuh/ft²-°F	**Insul R** ft²-°F/Btuh	**Htg HTM** Btuh/ft²	**Loss** Btuh	**Clg HTM** Btuh/ft²	**Gain** Btuh
Walls								
Frm wall, wd ext, 3/8" wood shth, r-20 cav ins, 1/2" gypsum board int fnsh, 2"x6" wood frm, 16" o.c. stud	n	283	0.060	20.0	4.12	1167	1.12	318
	e	205	0.060	20.0	4.12	845	1.12	230
	s	299	0.060	20.0	4.12	1233	1.12	336
	w	265	0.060	20.0	4.12	1093	1.12	298
	all	1052	0.060	20.0	4.12	4337	1.12	1182
Partitions								
Frm wall, 5/8" gyp.bd ext, r-20 cav ins, 1/2" gypsum board int fnsh, 2"x6" wood frm, 16" o.c. stud		345	0.064	20.0	4.42	1524	0.33	115
Windows								
2 glazing, clr outr, air gas, wd frm mat, clr innr, 1/4" gap, 1/8" thk: 2 glazing, clr outr, air gas, wd frm mat, clr innr, 1/4" gap, 1/8" thk; NFRC rated (SHGC=0.30); 50% outdoor insect screen; 6.67 ft head ht	n	41	0.300	0	20.7	849	9.54	391
	e	20	0.300	0	20.7	414	29.8	596
	s	28	0.300	0	20.7	580	15.4	430
	s	42	0.300	0	20.7	869	15.4	645
	all	131	0.300	0	20.7	2712	15.7	2062
Doors								
(none)								
Ceilings								
Attic ceiling, asphalt shingles roof mat, r-49 ceil ins, 1/2" gypsum board int fnsh		828	0.021	49.0	1.43	1180	0.98	809
Floors								
20P-30t: Flr floor, frm flr, 10" thkns, r-30 cav ins, gar ovr		752	0.035	30.0	2.41	1815	0.26	192
22B-10tpl: Bg floor, light dry soil, on grade depth, r-10 edge ins		43	0.210	10.0	14.5	623	0	0

Bold/italic values have been manually overridden

Component Constructions
Stairs
e3 Power

Job: 275 Hollbrook St
Date: Dec 24, 2022
By: Andy Wildenberg

181 E 56th Ave #600, Denver, CO 80216 Phone: 303-292-1233 Email: andy@e3power.net Web: www.e3power.net

Project Information

For: ADU 275 Hollbrook St
275 Hollbrook St, Erie, CO

Design Conditions

Location:
Denver Intl AP, CO, US
Elevation: 5130 ft
Latitude: 40°N

Outdoor:	**Heating**	**Cooling**
Dry bulb (°F)	***1***	***91***
Daily range (°F)	-	27 (H)
Wet bulb (°F)	-	60
Wind speed (mph)	15.0	7.5

Indoor:	**Heating**	**Cooling**
Indoor temperature (°F)	70	75
Design TD (°F)	69	16
Relative humidity (%)	50	50
Moisture difference (gr/lb)	60.7	-34.4

Infiltration:	
Method	Simplified
Construction quality	Semi-tight
Fireplaces	0

Construction descriptions	**Or**	**Area** ft²	**U-value** Btuh/ft²-°F	**Insul R** ft²-°F/Btuh	**Htg HTM** Btuh/ft²	**Loss** Btuh	**Clg HTM** Btuh/ft²	**Gain** Btuh
Walls								
Frm wall, wd ext, 3/8" wood shth, r-20 cav ins, 1/2" gypsum board int fnsh, 2"x6" wood frm, 16" o.c. stud	s	45	0.060	20.0	4.12	186	1.12	51
	w	40	0.060	20.0	4.12	165	1.12	45
	all	85	0.060	20.0	4.12	350	1.12	95
Partitions								
Frm wall, 5/8" gyp.bd ext, r-20 cav ins, 1/2" gypsum board int fnsh, 2"x6" wood frm, 16" o.c. stud		345	0.064	20.0	4.42	1524	0.33	115
Windows								
(none)								
Doors								
(none)								
Ceilings								
Attic ceiling, asphalt shingles roof mat, r-49 ceil ins, 1/2" gypsum board int fnsh		26	0.021	49.0	1.43	37	0.98	25
Floors								
22B-10tpl: Bg floor, light dry soil, on grade depth, r-10 edge ins		43	0.210	10.0	14.5	623	0	0

Bold/italic values have been manually overridden

Component Constructions
Bed 1
e3 Power

Job: 275 Hollbrook St
Date: Dec 24, 2022
By: Andy Wildenberg

181 E 56th Ave #600, Denver, CO 80216 Phone: 303-292-1233 Email: andy@e3power.net Web: www.e3power.net

Project Information

For: ADU 275 Hollbrook St
275 Hollbrook St, Erie, CO

Design Conditions

Location:
Denver Intl AP, CO, US
Elevation: 5130 ft
Latitude: 40°N

Outdoor:	**Heating**	**Cooling**
Dry bulb (°F)	***1***	***91***
Daily range (°F)	-	27 (H)
Wet bulb (°F)	-	60
Wind speed (mph)	15.0	7.5

Indoor:	**Heating**	**Cooling**
Indoor temperature (°F)	70	75
Design TD (°F)	69	16
Relative humidity (%)	50	50
Moisture difference (gr/lb)	60.7	-34.4

Infiltration:	
Method	Simplified
Construction quality	Semi-tight
Fireplaces	0

Construction descriptions	**Or**	**Area** ft²	**U-value** Btuh/ft²-°F	**Insul R** ft²-°F/Btuh	**Htg HTM** Btuh/ft²	**Loss** Btuh	**Clg HTM** Btuh/ft²	**Gain** Btuh
Walls								
Frm wall, wd ext, 3/8" wood shth, r-20 cav ins, 1/2" gypsum board int fnsh, 2"x6" wood frm, 16" o.c. stud	n	101	0.060	20.0	4.12	416	1.12	113
	w	108	0.060	20.0	4.12	445	1.12	121
	all	209	0.060	20.0	4.12	862	1.12	235
Partitions								
(none)								
Windows								
2 glazing, clr outr, air gas, wd frm mat, clr innr, 1/4" gap, 1/8" thk: 2 glazing, clr outr, air gas, wd frm mat, clr innr, 1/4" gap, 1/8" thk; NFRC rated (SHGC=0.30); 50% outdoor insect screen; 6.67 ft head ht	n	16	0.300	0	20.7	331	9.54	153
Doors								
(none)								
Ceilings								
Attic ceiling, asphalt shingles roof mat, r-49 ceil ins, 1/2" gypsum board int fnsh		133	0.021	49.0	1.43	190	0.98	130
Floors								
20P-30t: Flr floor, frm flr, 10" thkns, r-30 cav ins, gar ovr		133	0.035	30.0	2.41	322	0.26	34

Bold/italic values have been manually overridden

Component Constructions
W/D
e3 Power

Job: 275 Hollbrook St
Date: Dec 24, 2022
By: Andy Wildenberg

181 E 56th Ave #600, Denver, CO 80216 Phone: 303-292-1233 Email: andy@e3power.net Web: www.e3power.net

Project Information

For: ADU 275 Hollbrook St
275 Hollbrook St, Erie, CO

Design Conditions

Location:
Denver Intl AP, CO, US
Elevation: 5130 ft
Latitude: 40°N

Outdoor:	**Heating**	**Cooling**
Dry bulb (°F)	***1***	***91***
Daily range (°F)	-	27 (H)
Wet bulb (°F)	-	60
Wind speed (mph)	15.0	7.5

Indoor:	**Heating**	**Cooling**
Indoor temperature (°F)	70	75
Design TD (°F)	69	16
Relative humidity (%)	50	50
Moisture difference (gr/lb)	60.7	-34.4

Infiltration:	
Method	Simplified
Construction quality	Semi-tight
Fireplaces	0

Construction descriptions	**Or**	**Area** ft²	**U-value** Btuh/ft²-°F	**Insul R** ft²-°F/Btuh	**Htg HTM** Btuh/ft²	**Loss** Btuh	**Clg HTM** Btuh/ft²	**Gain** Btuh
Walls								
(none)								
Partitions								
(none)								
Windows								
(none)								
Doors								
(none)								
Ceilings								
Attic ceiling, asphalt shingles roof mat, r-49 ceil ins, 1/2" gypsum board int fnsh		11	0.021	49.0	1.43	15	0.98	10
Floors								
20P-30t: Flr floor, frm flr, 10" thkns, r-30 cav ins, gar ovr		11	0.035	30.0	2.41	25	0.26	3

Bold/italic values have been manually overridden

Component Constructions
Master Bed
e3 Power

Job: 275 Hollbrook St
Date: Dec 24, 2022
By: Andy Wildenberg

181 E 56th Ave #600, Denver, CO 80216 Phone: 303-292-1233 Email: andy@e3power.net Web: www.e3power.net

Project Information

For: ADU 275 Hollbrook St
275 Hollbrook St, Erie, CO

Design Conditions

Location:
Denver Intl AP, CO, US
Elevation: 5130 ft
Latitude: 40°N

Outdoor:	**Heating**	**Cooling**
Dry bulb (°F)	***1***	***91***
Daily range (°F)	-	27 (H)
Wet bulb (°F)	-	60
Wind speed (mph)	15.0	7.5

Indoor:	**Heating**	**Cooling**
Indoor temperature (°F)	70	75
Design TD (°F)	69	16
Relative humidity (%)	50	50
Moisture difference (gr/lb)	60.7	-34.4

Infiltration:	
Method	Simplified
Construction quality	Semi-tight
Fireplaces	0

Construction descriptions	**Or**	**Area** ft²	**U-value** Btuh/ft²-°F	**Insul R** ft²-°F/Btuh	**Htg HTM** Btuh/ft²	**Loss** Btuh	**Clg HTM** Btuh/ft²	**Gain** Btuh
Walls								
Frm wall, wd ext, 3/8" wood shth, r-20 cav ins, 1/2" gypsum board int fnsh, 2"x6" wood frm, 16" o.c. stud	s	101	0.060	20.0	4.12	416	1.12	113
	w	117	0.060	20.0	4.12	482	1.12	131
	all	218	0.060	20.0	4.12	899	1.12	245
Partitions								
(none)								
Windows								
2 glazing, clr outr, air gas, wd frm mat, clr innr, 1/4" gap, 1/8" thk: 2 glazing, clr outr, air gas, wd frm mat, clr innr, 1/4" gap, 1/8" thk; NFRC rated (SHGC=0.30); 50% outdoor insect screen; 6.67 ft head ht	s	16	0.300	0	20.7	331	15.4	246
Doors								
(none)								
Ceilings								
Attic ceiling, asphalt shingles roof mat, r-49 ceil ins, 1/2" gypsum board int fnsh		194	0.021	49.0	1.43	276	0.98	189
Floors								
20P-30t: Flr floor, frm flr, 10" thkns, r-30 cav ins, gar ovr		192	0.035	30.0	2.41	463	0.26	49

Bold/italic values have been manually overridden

Component Constructions
Hall
e3 Power

Job: 275 Hollbrook St
Date: Dec 24, 2022
By: Andy Wildenberg

181 E 56th Ave #600, Denver, CO 80216 Phone: 303-292-1233 Email: andy@e3power.net Web: www.e3power.net

Project Information

For: ADU 275 Hollbrook St
275 Hollbrook St, Erie, CO

Design Conditions

Location:
Denver Intl AP, CO, US
Elevation: 5130 ft
Latitude: 40°N

Outdoor:	**Heating**	**Cooling**
Dry bulb (°F)	***1***	***91***
Daily range (°F)	-	27 (H)
Wet bulb (°F)	-	60
Wind speed (mph)	15.0	7.5

Indoor:	**Heating**	**Cooling**
Indoor temperature (°F)	70	75
Design TD (°F)	69	16
Relative humidity (%)	50	50
Moisture difference (gr/lb)	60.7	-34.4

Infiltration:	
Method	Simplified
Construction quality	Semi-tight
Fireplaces	0

Construction descriptions	**Or**	**Area** ft²	**U-value** Btuh/ft²-°F	**Insul R** ft²-°F/Btuh	**Htg HTM** Btuh/ft²	**Loss** Btuh	**Clg HTM** Btuh/ft²	**Gain** Btuh
Walls								
(none)								
Partitions								
(none)								
Windows								
(none)								
Doors								
(none)								
Ceilings								
Attic ceiling, asphalt shingles roof mat, r-49 ceil ins, 1/2" gypsum board int fnsh		56	0.021	49.0	1.43	80	0.98	55
Floors								
20P-30t: Flr floor, frm flr, 10" thkns, r-30 cav ins, gar ovr		54	0.035	30.0	2.41	131	0.26	14

Bold/italic values have been manually overridden

Component Constructions
Master Ba
e3 Power

Job: 275 Hollbrook St
Date: Dec 24, 2022
By: Andy Wildenberg

181 E 56th Ave #600, Denver, CO 80216 Phone: 303-292-1233 Email: andy@e3power.net Web: www.e3power.net

Project Information

For: ADU 275 Hollbrook St
275 Hollbrook St, Erie, CO

Design Conditions

Location:
Denver Intl AP, CO, US
Elevation: 5130 ft
Latitude: 40°N

Outdoor:	**Heating**	**Cooling**
Dry bulb (°F)	***1***	***91***
Daily range (°F)	-	27 (H)
Wet bulb (°F)	-	60
Wind speed (mph)	15.0	7.5

Indoor:	**Heating**	**Cooling**
Indoor temperature (°F)	70	75
Design TD (°F)	69	16
Relative humidity (%)	50	50
Moisture difference (gr/lb)	60.7	-34.4

Infiltration:	
Method	Simplified
Construction quality	Semi-tight
Fireplaces	0

Construction descriptions	**Or**	**Area** ft²	**U-value** Btuh/ft²-°F	**Insul R** ft²-°F/Btuh	**Htg HTM** Btuh/ft²	**Loss** Btuh	**Clg HTM** Btuh/ft²	**Gain** Btuh
Walls								
Frm wall, wd ext, 3/8" wood shth, r-20 cav ins, 1/2" gypsum board int fnsh, 2"x6" wood frm, 16" o.c. stud	e	18	0.060	20.0	4.12	74	1.12	20
	s	51	0.060	20.0	4.12	210	1.12	57
	all	69	0.060	20.0	4.12	284	1.12	78
Partitions								
(none)								
Windows								
2 glazing, clr outr, air gas, wd frm mat, clr innr, 1/4" gap, 1/8" thk: 2 glazing, clr outr, air gas, wd frm mat, clr innr, 1/4" gap, 1/8" thk; NFRC rated (SHGC=0.30); 50% outdoor insect screen; 6.67 ft head ht	s	12	0.300	0	20.7	248	15.4	184
Doors								
(none)								
Ceilings								
Attic ceiling, asphalt shingles roof mat, r-49 ceil ins, 1/2" gypsum board int fnsh		42	0.021	49.0	1.43	60	0.98	41
Floors								
20P-30t: Flr floor, frm flr, 10" thkns, r-30 cav ins, gar ovr		39	0.035	30.0	2.41	94	0.26	10

Bold/italic values have been manually overridden

Component Constructions
Bath 1
e3 Power

Job: 275 Hollbrook St
Date: Dec 24, 2022
By: Andy Wildenberg

181 E 56th Ave #600, Denver, CO 80216 Phone: 303-292-1233 Email: andy@e3power.net Web: www.e3power.net

Project Information

For: ADU 275 Hollbrook St
275 Hollbrook St, Erie, CO

Design Conditions

Location:
Denver Intl AP, CO, US
Elevation: 5130 ft
Latitude: 40°N

Outdoor:	**Heating**	**Cooling**
Dry bulb (°F)	***1***	***91***
Daily range (°F)	-	27 (H)
Wet bulb (°F)	-	60
Wind speed (mph)	15.0	7.5

Indoor:	**Heating**	**Cooling**
Indoor temperature (°F)	70	75
Design TD (°F)	69	16
Relative humidity (%)	50	50
Moisture difference (gr/lb)	60.7	-34.4

Infiltration:	
Method	Simplified
Construction quality	Semi-tight
Fireplaces	0

Construction descriptions	**Or**	**Area** ft²	**U-value** Btuh/ft²-°F	**Insul R** ft²-°F/Btuh	**Htg HTM** Btuh/ft²	**Loss** Btuh	**Clg HTM** Btuh/ft²	**Gain** Btuh
Walls								
Frm wall, wd ext, 3/8" wood shth, r-20 cav ins, 1/2" gypsum board int fnsh, 2"x6" wood frm, 16" o.c. stud	n	50	0.060	20.0	4.12	204	1.12	56
Partitions								
(none)								
Windows								
(none)								
Doors								
(none)								
Ceilings								
Attic ceiling, asphalt shingles roof mat, r-49 ceil ins, 1/2" gypsum board int fnsh		47	0.021	49.0	1.43	67	0.98	46
Floors								
20P-30t: Flr floor, frm flr, 10" thkns, r-30 cav ins, gar ovr		47	0.035	30.0	2.41	113	0.26	12

Bold/italic values have been manually overridden

Component Constructions
Kitchen
e3 Power

Job: 275 Hollbrook St
Date: Dec 24, 2022
By: Andy Wildenberg

181 E 56th Ave #600, Denver, CO 80216 Phone: 303-292-1233 Email: andy@e3power.net Web: www.e3power.net

Project Information

For: ADU 275 Hollbrook St
275 Hollbrook St, Erie, CO

Design Conditions

Location:
Denver Intl AP, CO, US
Elevation: 5130 ft
Latitude: 40°N

Outdoor:	**Heating**	**Cooling**
Dry bulb (°F)	***1***	***91***
Daily range (°F)	-	27 (H)
Wet bulb (°F)	-	60
Wind speed (mph)	15.0	7.5

Indoor:	**Heating**	**Cooling**
Indoor temperature (°F)	70	75
Design TD (°F)	69	16
Relative humidity (%)	50	50
Moisture difference (gr/lb)	60.7	-34.4

Infiltration:	
Method	Simplified
Construction quality	Semi-tight
Fireplaces	0

Construction descriptions	**Or**	**Area** ft²	**U-value** Btuh/ft²-°F	**Insul R** ft²-°F/Btuh	**Htg HTM** Btuh/ft²	**Loss** Btuh	**Clg HTM** Btuh/ft²	**Gain** Btuh
Walls								
Frm wall, wd ext, 3/8" wood shth, r-20 cav ins, 1/2" gypsum board int fnsh, 2"x6" wood frm, 16" o.c. stud	n	72	0.060	20.0	4.12	297	1.12	81
Partitions								
(none)								
Windows								
2 glazing, clr outr, air gas, wd frm mat, clr innr, 1/4" gap, 1/8" thk: 2 glazing, clr outr, air gas, wd frm mat, clr innr, 1/4" gap, 1/8" thk; NFRC rated (SHGC=0.30); 50% outdoor insect screen; 6.67 ft head ht	n	9	0.300	0	20.7	186	9.54	86
Doors								
(none)								
Ceilings								
Attic ceiling, asphalt shingles roof mat, r-49 ceil ins, 1/2" gypsum board int fnsh		108	0.021	49.0	1.43	154	0.98	106
Floors								
20P-30t: Flr floor, frm flr, 10" thkns, r-30 cav ins, gar ovr		108	0.035	30.0	2.41	261	0.26	28

Bold/italic values have been manually overridden

Component Constructions
Great
e3 Power

Job: 275 Hollbrook St
Date: Dec 24, 2022
By: Andy Wildenberg

181 E 56th Ave #600, Denver, CO 80216 Phone: 303-292-1233 Email: andy@e3power.net Web: www.e3power.net

Project Information

For: ADU 275 Hollbrook St
275 Hollbrook St, Erie, CO

Design Conditions

Location:
Denver Intl AP, CO, US
Elevation: 5130 ft
Latitude: 40°N

Outdoor:	**Heating**	**Cooling**
Dry bulb (°F)	***1***	***91***
Daily range (°F)	-	27 (H)
Wet bulb (°F)	-	60
Wind speed (mph)	15.0	7.5

Indoor:	**Heating**	**Cooling**
Indoor temperature (°F)	70	75
Design TD (°F)	69	16
Relative humidity (%)	50	50
Moisture difference (gr/lb)	60.7	-34.4

Infiltration:	
Method	Simplified
Construction quality	Semi-tight
Fireplaces	0

Construction descriptions	**Or**	**Area** ft²	**U-value** Btuh/ft²-°F	**Insul R** ft²-°F/Btuh	**Htg HTM** Btuh/ft²	**Loss** Btuh	**Clg HTM** Btuh/ft²	**Gain** Btuh
Walls								
Frm wall, wd ext, 3/8" wood shth, r-20 cav ins, 1/2" gypsum board int fnsh, 2"x6" wood frm, 16" o.c. stud	n	61	0.060	20.0	4.12	249	1.12	68
	e	138	0.060	20.0	4.12	567	1.12	154
	s	66	0.060	20.0	4.12	272	1.12	74
	all	264	0.060	20.0	4.12	1088	1.12	297
Partitions								
(none)								
Windows								
2 glazing, clr outr, air gas, wd frm mat, clr innr, 1/4" gap, 1/8" thk: 2 glazing, clr outr, air gas, wd frm mat, clr innr, 1/4" gap, 1/8" thk; NFRC rated (SHGC=0.30); 50% outdoor insect screen; 6.67 ft head ht	n	16	0.300	0	20.7	331	9.54	153
	e	20	0.300	0	20.7	414	29.8	596
	s	42	0.300	0	20.7	869	15.4	645
	all	78	0.300	0	20.7	1615	17.9	1394
Doors								
(none)								
Ceilings								
Attic ceiling, asphalt shingles roof mat, r-49 ceil ins, 1/2" gypsum board int fnsh		171	0.021	49.0	1.43	243	0.98	167
Floors								
20P-30t: Flr floor, frm flr, 10" thkns, r-30 cav ins, gar ovr		168	0.035	30.0	2.41	406	0.26	43

Bold/italic values have been manually overridden

Component Constructions
Stair 1
e3 Power

Job: 275 Hollbrook St
Date: Dec 24, 2022
By: Andy Wildenberg

181 E 56th Ave #600, Denver, CO 80216 Phone: 303-292-1233 Email: andy@e3power.net Web: www.e3power.net

Project Information

For: ADU 275 Hollbrook St
275 Hollbrook St, Erie, CO

Design Conditions

Location:
Denver Intl AP, CO, US
Elevation: 5130 ft
Latitude: 40°N

Outdoor:	**Heating**	**Cooling**
Dry bulb (°F)	***1***	***91***
Daily range (°F)	-	27 (H)
Wet bulb (°F)	-	60
Wind speed (mph)	15.0	7.5

Indoor:	**Heating**	**Cooling**
Indoor temperature (°F)	70	75
Design TD (°F)	69	16
Relative humidity (%)	50	50
Moisture difference (gr/lb)	60.7	-34.4

Infiltration:	
Method	Simplified
Construction quality	Semi-tight
Fireplaces	0

Construction descriptions	**Or**	**Area** ft²	**U-value** Btuh/ft²-°F	**Insul R** ft²-°F/Btuh	**Htg HTM** Btuh/ft²	**Loss** Btuh	**Clg HTM** Btuh/ft²	**Gain** Btuh
Walls								
Frm wall, wd ext, 3/8" wood shth, r-20 cav ins, 1/2" gypsum board int fnsh, 2"x6" wood frm, 16" o.c. stud	e	50	0.060	20.0	4.12	204	1.12	56
	s	36	0.060	20.0	4.12	148	1.12	40
	all	86	0.060	20.0	4.12	352	1.12	96
Partitions								
(none)								
Windows								
(none)								
Doors								
(none)								
Ceilings								
Attic ceiling, asphalt shingles roof mat, r-49 ceil ins, 1/2" gypsum board int fnsh		42	0.021	49.0	1.43	59	0.98	41
Floors								
(none)								

Bold/italic values have been manually overridden

Right-J® Worksheet
Entire House
e3 Power

Job: 275 Hollbrook St
Date: Dec 24, 2022
By: Andy Wildenberg

181 E 56th Ave #600, Denver, CO 80216 Phone: 303-292-1233 Email: andy@e3power.net Web: www.e3power.net

1	Room name	Entire House	Stairs
2	Exposed wall	165.0 ft	43.0 ft
3	Room height	9.1 ft	10.0 ft heat/cool
4	Room dimensions		4.5 x 17.0 ft
5	Room area	878.5 ft²	76.5 ft²

	Ty	Construction number	U-value (Btuh/ft²-°F)	Or	HTM (Btuh/ft²) Heat	HTM (Btuh/ft²) Cool	Area (ft²) or perimeter (ft) Gross	N/P/S	Load (Btuh) Heat	Load (Btuh) Cool	Area (ft²) or perimeter (ft) Gross	N/P/S	Load (Btuh) Heat	Load (Btuh) Cool
6	W	Frm wall, wd ext, 3/	0.060	n	4.12	1.12	324	283	1167	318	0	0	0	0
.	G	2 glazing, dr outr,	0.300	n	20.70	9.54	41	0	849	391	0	0	0	0
.	W	Frm wall, wd ext, 3/	0.060	e	4.12	1.12	225	205	845	230	0	0	0	0
.	G	2 glazing, dr outr,	0.300	e	20.70	29.80	20	0	414	596	0	0	0	0
11	W	Frm wall, wd ext, 3/	0.060	s	4.12	1.12	369	299	1233	336	45	45	186	51
	G	2 glazing, dr outr,	0.300	s	20.70	15.36	28	0	580	430	0	0	0	0
	G	2 glazing, dr outr,	0.300	s	20.70	15.36	42	0	869	645	0	0	0	0
	W	Frm wall, wd ext, 3/	0.060	w	4.12	1.12	265	265	1093	298	40	40	165	45
	P	Frm wall, 5/8" gyp.b	0.064	-	4.42	0.33	345	345	1524	115	345	345	1524	115
	C	Attic ceiling, aspha	0.021	-	1.43	0.98	828	828	1180	809	26	26	37	25
	F	20P-30t	0.035	-	2.41	0.26	752	752	1815	192	0	0	0	0
	F	22B-10tpl	0.210	-	14.49	0.00	77	43	623	0	77	43	623	0

6	c) AED excursion					98					-1
	Envelope loss/gain				12191	4458			2534	234
12	a) Infiltration				4528	553			325	40
	b) Room ventilation				0	0			0	0
13	Internal gains:	Occupants @ 230	4			920	0			0
		Appliances/other				2600				0
	Subtotal (lines 6 to 13)				16718	8531			2860	274
	Less external load				0	0			0	0
	Less transfer				0	0			0	0
	Redistribution				0	0			0	0
14	Subtotal				16718	8531			2860	274
15	Duct loads		24%	39%	3998	3366	-0%	0%	0	0
	Total room load				20717	11897			2860	274
	Air required (cfm)				631	631			87	15

Calculations approved by ACCA to meet all requirements of Manual J 8th Ed.

Right-J® Worksheet
Entire House
e3 Power

Job: 275 Hollbrook St
Date: Dec 24, 2022
By: Andy Wildenberg

181 E 56th Ave #600, Denver, CO 80216 Phone: 303-292-1233 Email: andy@e3power.net Web: www.e3power.net

1	Room name	Bed 1	W/D
2	Exposed wall	25.0 ft	0 ft
3	Room height	9.0 ft heat/cool	9.0 ft heat/cool
4	Room dimensions	1.0 x 133.3 ft	3.5 x 3.0 ft
5	Room area	133.3 ft²	10.5 ft²

	Ty	Construction number	U-value (Btuh/ft²-°F)	Or	HTM (Btuh/ft²) Heat	HTM (Btuh/ft²) Cool	Bed 1 Area (ft²) or perimeter (ft) Gross	Bed 1 N/P/S	Bed 1 Load (Btuh) Heat	Bed 1 Load (Btuh) Cool	W/D Area (ft²) or perimeter (ft) Gross	W/D N/P/S	W/D Load (Btuh) Heat	W/D Load (Btuh) Cool
6	W	Frm wall, wd ext, 3/	0.060	n	4.12	1.12	117	101	416	113	0	0	0	0
.	G	2 glazing, dr outr,	0.300	n	20.70	9.54	16	0	331	153	0	0	0	0
.	W	Frm wall, wd ext, 3/	0.060	e	4.12	1.12	0	0	0	0	0	0	0	0
.	G	2 glazing, dr outr,	0.300	e	20.70	29.80	0	0	0	0	0	0	0	0
11	W	Frm wall, wd ext, 3/	0.060	s	4.12	1.12	0	0	0	0	0	0	0	0
	G	2 glazing, dr outr,	0.300	s	20.70	15.36	0	0	0	0	0	0	0	0
	G	2 glazing, dr outr,	0.300	s	20.70	15.36	0	0	0	0	0	0	0	0
	W	Frm wall, wd ext, 3/	0.060	w	4.12	1.12	108	108	445	121	0	0	0	0
	P	Frm wall, 5/8" gyp.b	0.064	-	4.42	0.33	0	0	0	0	0	0	0	0
	C	Attic ceiling, aspha	0.021	-	1.43	0.98	133	133	190	130	11	11	15	10
	F	20P-30t	0.035	-	2.41	0.26	133	133	322	34	11	11	25	3
	F	22B-10tpl	0.210	-	14.49	0.00	0	0	0	0	0	0	0	0

6	c) AED excursion									-3				-2
	Envelope loss/gain								1705	549			40	11
12	a) Infiltration								861	105			0	0
	b) Room ventilation								0	0			0	0
13	Internal gains:	Occupants @	230				0			0	0			0
		Appliances/other								0				500
	Subtotal (lines 6 to 13)								2566	654			40	511
	Less external load								0	0			0	0
	Less transfer								0	0			0	0
	Redistribution								54	358			-40	-511
14	Subtotal								2620	1012			0	0
15	Duct loads						29%	41%	756	412	29%	41%	0	0
	Total room load								3375	1424			0	0
	Air required (cfm)								103	76			0	0

Calculations approved by ACCA to meet all requirements of Manual J 8th Ed.

Right-J® Worksheet
Entire House
e3 Power

Job: 275 Hollbrook St
Date: Dec 24, 2022
By: Andy Wildenberg

181 E 56th Ave #600, Denver, CO 80216 Phone: 303-292-1233 Email: andy@e3power.net Web: www.e3power.net

		Master Bed	Hall
1	Room name	Master Bed	Hall
2	Exposed wall	26.0 ft	0 ft
3	Room height	9.0 ft heat/cool	9.0 ft heat/cool
4	Room dimensions	1.0 x 193.5 ft	1.0 x 56.0 ft
5	Room area	193.5 ft²	56.0 ft²

	Ty	Construction number	U-value (Btuh/ft²-°F)	Or	HTM (Btuh/ft²) Heat	HTM (Btuh/ft²) Cool	Master Bed Area (ft²) or perimeter (ft) Gross	Master Bed N/P/S	Master Bed Load (Btuh) Heat	Master Bed Load (Btuh) Cool	Hall Area (ft²) or perimeter (ft) Gross	Hall N/P/S	Hall Load (Btuh) Heat	Hall Load (Btuh) Cool
6	W	Frm wall, wd ext, 3/	0.060	n	4.12	1.12	0	0	0	0	0	0	0	0
.	G	2 glazing, dr outr,	0.300	n	20.70	9.54	0	0	0	0	0	0	0	0
.	W	Frm wall, wd ext, 3/	0.060	e	4.12	1.12	0	0	0	0	0	0	0	0
.	G	2 glazing, dr outr,	0.300	e	20.70	29.80	0	0	0	0	0	0	0	0
11	W	Frm wall, wd ext, 3/	0.060	s	4.12	1.12	117	101	416	113	0	0	0	0
	G	2 glazing, dr outr,	0.300	s	20.70	15.36	16	0	331	246	0	0	0	0
	G	2 glazing, dr outr,	0.300	s	20.70	15.36	0	0	0	0	0	0	0	0
	W	Frm wall, wd ext, 3/	0.060	w	4.12	1.12	117	117	482	131	0	0	0	0
	P	Frm wall, 5/8" gyp.b	0.064	-	4.42	0.33	0	0	0	0	0	0	0	0
	C	Attic ceiling, aspha	0.021	-	1.43	0.98	194	194	276	189	56	56	80	55
	F	20P-30t	0.035	-	2.41	0.26	192	192	463	49	54	54	131	14
	F	22B-10tpl	0.210	-	14.49	0.00	0	0	0	0	0	0	0	0

6	c) AED excursion									65				0
	Envelope loss/gain								1969	794			211	68
12	a) Infiltration								896	109			0	0
	b) Room ventilation								0	0			0	0
13	Internal gains:	Occupants @	230				1			230	0			0
		Appliances/other								0				0
	Subtotal (lines 6 to 13)								2864	1133			211	68
	Less external load								0	0			0	0
	Less transfer								0	0			0	0
	Redistribution								258	70			-211	-68
14	Subtotal								3122	1203			0	0
15	Duct loads						29%	41%	901	491	29%	41%	0	0
	Total room load								4023	1694			0	0
	Air required (cfm)								123	90			0	0

Calculations approved by ACCA to meet all requirements of Manual J 8th Ed.

Right-J® Worksheet
Entire House
e3 Power

Job: 275 Hollbrook St
Date: Dec 24, 2022
By: Andy Wildenberg

181 E 56th Ave #600, Denver, CO 80216 Phone: 303-292-1233 Email: andy@e3power.net Web: www.e3power.net

1	Room name						Master Ba				Bath 1			
2	Exposed wall						9.0 ft				5.5 ft			
3	Room height						9.0 ft		heat/cool		9.0 ft		heat/cool	
4	Room dimensions						7.0 x 6.0 ft				5.5 x 8.5 ft			
5	Room area						42.0 ft²				46.8 ft²			
	Ty	Construction number	U-value (Btuh/ft²-°F)	Or	HTM (Btuh/ft²)		Area (ft²) or perimeter (ft)		Load (Btuh)		Area (ft²) or perimeter (ft)		Load (Btuh)	
					Heat	Cool	Gross	N/P/S	Heat	Cool	Gross	N/P/S	Heat	Cool
6	W	Frm wall, wd ext, 3/	0.060	n	4.12	1.12	0	0	0	0	50	50	204	56
.	G	2 glazing, dr outr,	0.300	n	20.70	9.54	0	0	0	0	0	0	0	0
.	W	Frm wall, wd ext, 3/	0.060	e	4.12	1.12	18	18	74	20	0	0	0	0
.	G	2 glazing, dr outr,	0.300	e	20.70	29.80	0	0	0	0	0	0	0	0
11	W	Frm wall, wd ext, 3/	0.060	s	4.12	1.12	63	51	210	57	0	0	0	0
	G	2 glazing, dr outr,	0.300	s	20.70	15.36	12	0	248	184	0	0	0	0
	G	2 glazing, dr outr,	0.300	s	20.70	15.36	0	0	0	0	0	0	0	0
	W	Frm wall, wd ext, 3/	0.060	w	4.12	1.12	0	0	0	0	0	0	0	0
	P	Frm wall, 5/8" gyp.b	0.064	-	4.42	0.33	0	0	0	0	0	0	0	0
	C	Attic ceiling, aspha	0.021	-	1.43	0.98	42	42	60	41	47	47	67	46
	F	20P-30t	0.035	-	2.41	0.26	39	39	94	10	47	47	113	12
	F	22B-10tpl	0.210	-	14.49	0.00	0	0	0	0	0	0	0	0
6	c) AED excursion									51				-1
	Envelope loss/gain								687	364			384	113
12	a) Infiltration								310	38			189	23
	b) Room ventilation								0	0			0	0
13	Internal gains:	Occupants @	230				0			0	0			0
		Appliances/other								0				0
	Subtotal (lines 6 to 13)								997	401			573	136
	Less external load								0	0			0	0
	Less transfer								0	0			0	0
	Redistribution								174	41			54	175
14	Subtotal								1171	443			627	310
15	Duct loads						29%	41%	338	181	29%	41%	181	127
	Total room load								1509	623			808	437
	Air required (cfm)								46	33			25	23

Calculations approved by ACCA to meet all requirements of Manual J 8th Ed.

Right-J® Worksheet
Entire House
e3 Power

Job: 275 Hollbrook St
Date: Dec 24, 2022
By: Andy Wildenberg

181 E 56th Ave #600, Denver, CO 80216 Phone: 303-292-1233 Email: andy@e3power.net Web: www.e3power.net

1	Room name						Kitchen				Great			
2	Exposed wall						9.0 ft				38.0 ft			
3	Room height						9.0 ft		heat/cool		9.0 ft		heat/cool	
4	Room dimensions						9.0 x 12.0 ft				1.0 x 170.5 ft			
5	Room area						108.0 ft²				170.5 ft²			
	Ty	Construction number	U-value (Btuh/ft²-°F)	Or	HTM (Btuh/ft²)		Area (ft²) or perimeter (ft)		Load (Btuh)		Area (ft²) or perimeter (ft)		Load (Btuh)	
					Heat	Cool	Gross	N/P/S	Heat	Cool	Gross	N/P/S	Heat	Cool
6	W	Frm wall, wd ext, 3/	0.060	n	4.12	1.12	81	72	297	81	77	61	249	68
.	G	2 glazing, dr outr,	0.300	n	20.70	9.54	9	0	186	86	16	0	331	153
.	W	Frm wall, wd ext, 3/	0.060	e	4.12	1.12	0	0	0	0	158	138	567	154
.	G	2 glazing, dr outr,	0.300	e	20.70	29.80	0	0	0	0	20	0	414	596
11	W	Frm wall, wd ext, 3/	0.060	s	4.12	1.12	0	0	0	0	108	66	272	74
	G	2 glazing, dr outr,	0.300	s	20.70	15.36	0	0	0	0	0	0	0	0
	G	2 glazing, dr outr,	0.300	s	20.70	15.36	0	0	0	0	42	0	869	645
	W	Frm wall, wd ext, 3/	0.060	w	4.12	1.12	0	0	0	0	0	0	0	0
	P	Frm wall, 5/8" gyp.b	0.064	-	4.42	0.33	0	0	0	0	0	0	0	0
	C	Attic ceiling, aspha	0.021	-	1.43	0.98	108	108	154	106	171	171	243	167
	F	20P-30t	0.035	-	2.41	0.26	108	108	261	28	168	168	406	43
	F	22B-10tpl	0.210	-	14.49	0.00	0	0	0	0	0	0	0	0
6	c) AED excursion									-9				1
	Envelope loss/gain								898	290			3352	1901
12	a) Infiltration								310	38			1309	160
	b) Room ventilation								0	0			0	0
13	Internal gains:	Occupants @	230				2			460	1			230
		Appliances/other								1200				900
	Subtotal (lines 6 to 13)								1208	1988			4661	3190
	Less external load								0	0			0	0
	Less transfer								0	0			0	0
	Redistribution								190	48			261	62
14	Subtotal								1398	2037			4921	3252
15	Duct loads						29%	41%	403	830	29%	41%	1420	1326
	Total room load								1801	2867			6341	4578
	Air required (cfm)								55	152			193	243

Calculations approved by ACCA to meet all requirements of Manual J 8th Ed.

Right-J® Worksheet
Entire House
e3 Power

Job: 275 Hollbrook St
Date: Dec 24, 2022
By: Andy Wildenberg

181 E 56th Ave #600, Denver, CO 80216 Phone: 303-292-1233 Email: andy@e3power.net Web: www.e3power.net

1	Room name	Stair 1
2	Exposed wall	9.5 ft
3	Room height	9.0 ft heat/cool
4	Room dimensions	1.0 x 41.5 ft
5	Room area	41.5 ft²

	Ty	Construction number	U-value (Btuh/ft²-°F)	Or	HTM (Btuh/ft²) Heat	HTM (Btuh/ft²) Cool	Area (ft²) or perimeter (ft) Gross	Area N/P/S	Load (Btuh) Heat	Load (Btuh) Cool	Area or perimeter Gross	Area N/P/S	Load Heat	Load Cool
6	W	Frm wall, wd ext, 3/	0.060	n	4.12	1.12	0	0	0	0				
.	G	2 glazing, dr outr,	0.300	n	20.70	9.54	0	0	0	0				
.	W	Frm wall, wd ext, 3/	0.060	e	4.12	1.12	50	50	204	56				
.	G	2 glazing, dr outr,	0.300	e	20.70	29.80	0	0	0	0				
11	W	Frm wall, wd ext, 3/	0.060	s	4.12	1.12	36	36	148	40				
	G	2 glazing, dr outr,	0.300	s	20.70	15.36	0	0	0	0				
	G	2 glazing, dr outr,	0.300	s	20.70	15.36	0	0	0	0				
	W	Frm wall, wd ext, 3/	0.060	w	4.12	1.12	0	0	0	0				
	P	Frm wall, 5/8" gyp.b	0.064	-	4.42	0.33	0	0	0	0				
	C	Attic ceiling, aspha	0.021	-	1.43	0.98	42	42	59	41				
	F	20P-30t	0.035	-	2.41	0.26	0	0	0	0				
	F	22B-10tpl	0.210	-	14.49	0.00	0	0	0	0				

6	c) AED excursion					-1	
	Envelope loss/gain				412	136	
12	a) Infiltration				327	40	
	b) Room ventilation				0	0	
13	Internal gains:	Occupants @ 230	0			0	
		Appliances/other				0	
	Subtotal (lines 6 to 13)				739	176	
	Less external load				0	0	
	Less transfer				0	0	
	Redistribution				-739	-176	
14	Subtotal				0	0	
15	Duct loads		29%	41%	0	0	
	Total room load				0	0	
	Air required (cfm)				0	0	

Calculations approved by ACCA to meet all requirements of Manual J 8th Ed.

AED Assessment
Entire House
e3 Power

Job: 275 Hollbrook St
Date: Dec 24, 2022
By: Andy Wildenberg

181 E 56th Ave #600, Denver, CO 80216 Phone: 303-292-1233 Email: andy@e3power.net Web: www.e3power.net

Project Information

For: ADU 275 Hollbrook St
275 Hollbrook St, Erie, CO

Design Conditions

Location:
Denver Intl AP, CO, US
Elevation: ***5130*** ft
Latitude: 40°N

Outdoor:	**Heating**	**Cooling**
Dry bulb (°F)	***1***	***91***
Daily range (°F)	-	27 (H)
Wet bulb (°F)	-	60
Wind speed (mph)	15.0	7.5

Indoor:	**Heating**	**Cooling**
Indoor temperature (°F)	70	75
Design TD (°F)	69	16
Relative humidity (%)	50	50
Moisture difference (gr/lb)	60.7	-34.4

Infiltration:

Test for Adequate Exposure Diversity

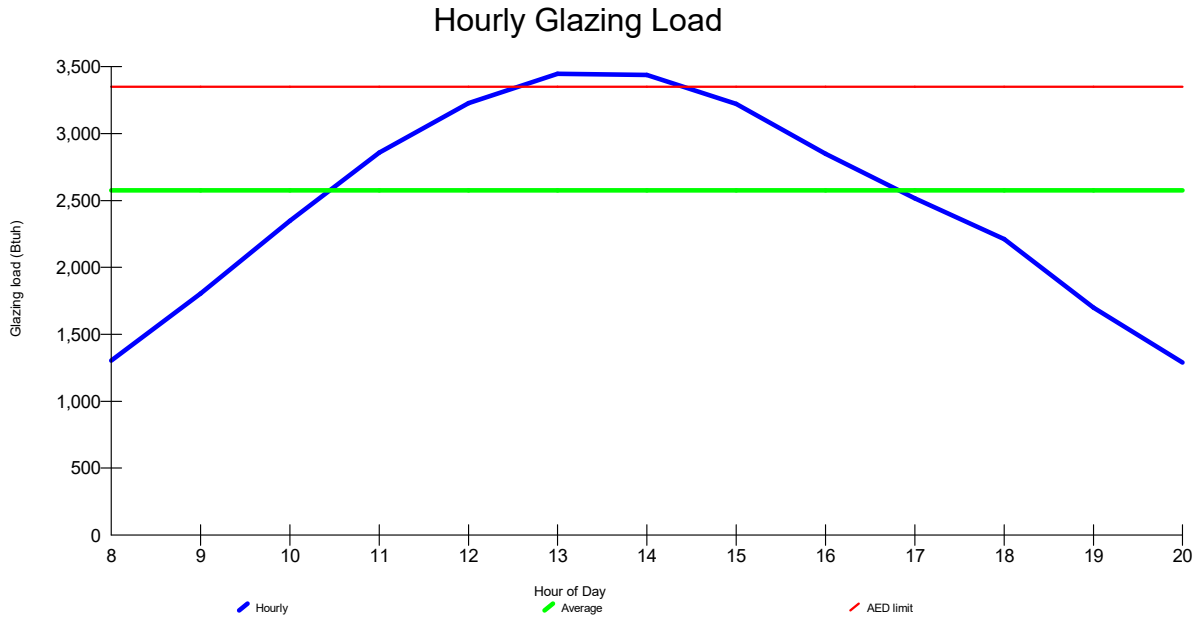

Maximum hourly glazing load exceeds average by 33.8%.

House does not have adequate exposure diversity (AED), based on AED limit of 30%.

AED excursion: 98 Btuh (PFG - 1.3*AFG)

Bold/italic values have been manually overridden

Garage

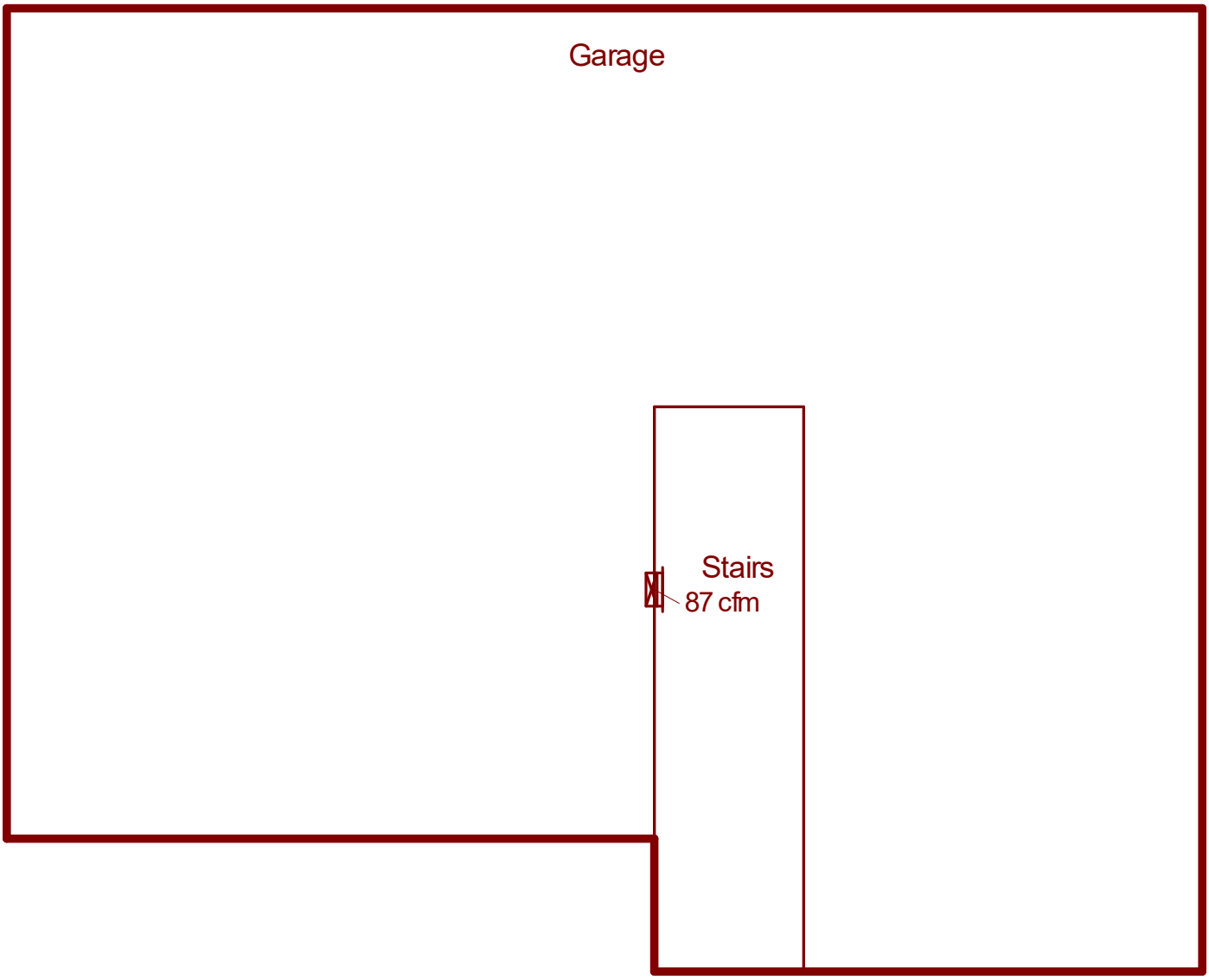

Job #: 275 Hollbrook St
Performed by Andy Wildenberg for:
ADU 275 Hollbrook St
275 Hollbrook St
Erie, CO

e3 Power
181 E 56th Ave #600
Denver, CO 80216
Phone: 303-292-1233
www.e3power.net andy@e3power.net

Scale: 1 : 60

Right-Suite® Universal 2022
22.0.05 RSU20708
2022-Dec-26 15:10:48
...ghtsoft HVAC\275 Holbrook St.rup

Main Level

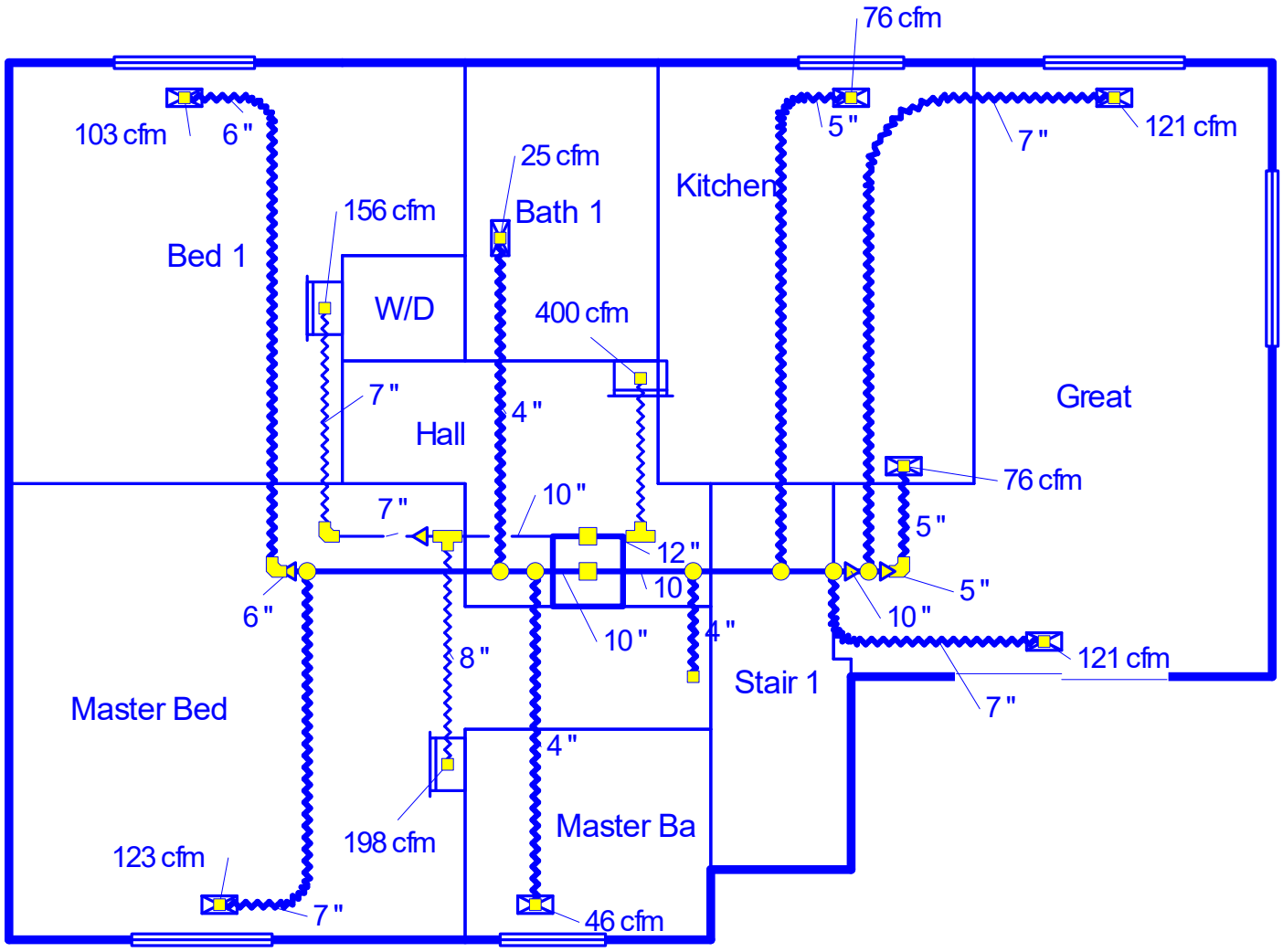

Job #: 275 Hollbrook St **Performed by Andy Wildenberg for:** ADU 275 Hollbrook St 275 Hollbrook St Erie, CO	**e3 Power** 181 E 56th Ave #600 Denver, CO 80216 Phone: 303-292-1233 www.e3power.net andy@e3power.net	Scale: 1 : 60 Page 2 Right-Suite® Universal 2022 22.0.05 RSU20708 2022-Dec-26 15:10:48 ...ghtsoft HVAC\275 Holbrook St.rup

Duct System Summary
Entire House
e3 Power

Job: 275 Hollbrook St
Date: Dec 24, 2022
By: Andy Wildenberg

181 E 56th Ave #600, Denver, CO 80216 Phone: 303-292-1233 Email: andy@e3power.net Web: www.e3power.net

Project Information

For: ADU 275 Hollbrook St
275 Hollbrook St, Erie, CO

	Heating		Cooling	
External static pressure	***0.80***	in H2O	***0.80***	in H2O
Pressure losses	0.46	in H2O	0.46	in H2O
Available static pressure	0.34	in H2O	0.34	in H2O
Supply / return available pressure	0.193 / 0.147	in H2O	0.193 / 0.147	in H2O
Lowest friction rate	0.108	in/100ft	0.108	in/100ft
Actual air flow	631	cfm	631	cfm
Total effective length (TEL)			315 ft	

Supply Branch Detail Table

Name		Design (Btuh)	Htg (cfm)	Clg (cfm)	Design FR	Diam (in)	H x W (in)	Duct Matl	Actual Ln (ft)	Ftg.Eqv Ln (ft)	Trunk
Bath 1	h	808	25	23	0.123	4.0	0x 0	MtFx	12.0	145.0	st2
Bed 1	h	3375	103	76	0.143	6.0	0x 0	MtFx	25.0	110.0	st2A
Great	c	2289	97	121	0.124	7.0	0x 0	MtFx	15.0	140.0	st1
Great-A	c	2289	97	121	0.108	7.0	0x 0	MtFx	28.5	150.0	st1A
Kitchen	c	1433	27	76	0.113	5.0	0x 0	MtFx	21.0	150.0	st1
Kitchen-A	c	1433	27	76	0.152	5.0	0x 0	MtFx	12.0	115.0	st1B
Master Ba	h	1509	46	33	0.120	4.0	0x 0	MtFx	11.0	150.0	st2
Master Bed	h	4023	123	90	0.121	7.0	0x 0	MtFx	20.0	140.0	st2
Stairs	h	2860	87	15	0.115	***4.0***	***0x 0***	MtFx	18.0	150.0	st1

Supply Trunk Detail Table

Name	Trunk Type	Htg (cfm)	Clg (cfm)	Design FR	Veloc (fpm)	Diam (in)	H x W (in)	Duct Material	Trunk
st1	Peak AVF	335	409	0.108	751	***10.0***	***0 x 0***	ShtMetl	
st1B	Peak AVF	27	76	0.152	558	5.0	0 x 0	ShtMetl	st1A
st1A	Peak AVF	124	197	0.108	362	***10.0***	***0 x 0***	ShtMetl	st1
st2	Peak AVF	296	222	0.120	543	***10.0***	***0 x 0***	ShtMetl	
st2A	Peak AVF	103	76	0.143	524	6.0	0 x 0	ShtMetl	st2

Bold/italic values have been manually overridden

Return Branch Detail Table

Name	Grille Size (in)	Htg (cfm)	Clg (cfm)	TEL (ft)	Design FR	Veloc (fpm)	Diam (in)	H x W (in)	Stud/Joist Opening (in)	Duct Matl	Trunk
rb3	0x 0	156	104	124.0	0.119	585	7.0	0x 0		MtFx	rt1A
rb2	0x 0	198	128	130.5	0.113	566	8.0	0x 0		MtFx	rt1
rb1	0x 0	277	400	136.0	0.108	509	12.0	0x 0		MtFx	

Return Trunk Detail Table

Name	Trunk Type	Htg (cfm)	Clg (cfm)	Design FR	Veloc (fpm)	Diam (in)	H x W (in)	Duct Material	Trunk
rt1A	Peak AVF	156	104	0.119	585	7.0	0 x 0	ShtMetl	rt1
rt1	Peak AVF	354	231	0.113	649	***10.0***	***0*** x ***0***	ShtMetl	

Bold/italic values have been manually overridden

Static Pressure and Friction Rate

Entire House

e3 Power

Job: 275 Hollbrook St
Date: Dec 24, 2022
By: Andy Wildenberg

181 E 56th Ave #600, Denver, CO 80216 Phone: 303-292-1233 Email: andy@e3power.net Web: www.e3power.net

Project Information

For: ADU 275 Hollbrook St
275 Hollbrook St, Erie, CO

Available Static Pressure

	Heating (in H2O)	Cooling (in H2O)
External static pressure	0.80	0.80
Pressure losses		
Coil	0.30	0.30
Heat exchanger	0	0
Supply diffusers	0.03	0.03
Return grilles	0.03	0.03
Filter	0.10	0.10
Humidifier	0	0
Balancing damper	0	0
Other device	0	0
Available static pressure	0.34	0.34

Total Effective Length

	Supply (ft)	Return (ft)
Measured length of run-out	21	6
Measured length of trunk	8	0
Equivalent length of fittings	150	130
Total length	179	136
Total effective length		315

Friction Rate

	Heating (in/100ft)		Cooling (in/100ft)	
Supply Ducts	0.108	OK	0.108	OK
Return Ducts	0.108	OK	0.108	OK

Fitting Equivalent Length Details

Supply 4H=50, 2K0=50, 11G=5, 12J1=10, 1C=35: TotalEL=150

Return 6H=15, 6A6=75, 5A=40: TotalEL=130