Cordex 125-1.1kW 19" Shelf for Systems up to 6600W

Technical Guide 030-740-B2

Effective: 05/2018

Alpha Technologies Ltd.

Cordex 125-1.1kW 19" Shelf for Systems up to 6600W

NOTE:

Photographs contained in this manual are for illustrative purposes only. These photographs may not match your installation.

NOTE:

Operator is cautioned to review the drawings and illustrations contained in this manual before proceeding. If there are questions regarding the safe operation of this powering system, contact Alpha Technologies or your nearest Alpha representative.

NOTE:

Alpha shall not be held liable for any damage or injury involving its enclosures, power supplies, generators, batteries, or other hardware if used or operated in any manner or subject to any condition inconsistent with its intended purpose, or if installed or operated in an unapproved manner, or improperly maintained.

For technical support, contact Alpha Technologies:

Canada and USA: **1-888-462-7487**
International: **+1-604-436-5547**

Copyright

Copyright © 2018 Alpha Technologies Ltd. All rights reserved. Alpha is a registered trademark of Alpha Technologies.

No part of this documentation shall be reproduced, stored in a retrieval system, translated, transcribed, or transmitted in any form or by any means manual, electric, electronic, electromechanical, chemical, optical, or otherwise without prior explicit written permission from Alpha Technologies.

This document, the software it describes, and the information and know-how they contain constitute the proprietary, confidential and valuable trade secret information of Alpha Technologies, and may not be used for any unauthorized purpose, or disclosed to others without the prior written permission of Alpha Technologies.

The material contained in this document is for information only and is subject to change without notice. While reasonable efforts have been made in the preparation of this document to assure its accuracy, Alpha Technologies assumes no liability resulting from errors or omissions in this document, or from the use of the information contained herein. Alpha Technologies reserves the right to make changes in the product design without reservation and without notification to its users.

Table of Contents

1. Safety 5
   - 1.1 Safety Symbols 5
   - 1.2 General Warning and Cautions 5
   - 1.3 Electrical Safety 6
   - 1.4 Battery Safety 6
2. Overview 7
3. Features 8
   - 3.1 Front Panel 8
   - 3.2 Rear Panel 9
   - 3.3 True Module Fail Alarm 9
   - 3.4 Heat Dissipation 9
   - 3.5 Over Temperature Protection 9
   - 3.6 Wide AC Range 9
   - 3.7 Soft Start 10
   - 3.8 Start Delay 10
   - 3.9 Current Limit/Short Circuit Protection 10
   - 3.10 Power Limiting 10
   - 3.11 High Voltage Shutdown (HVSD) 10
   - 3.12 Battery Eliminator Operation 10
4. Specifications 11
5. Site Evaluation and Pre-Installation 15
   - 5.1 Packing Materials 15
   - 5.2 Check for Damage 15
   - 5.3 General Receipt of Shipment 15
6. Installation 16
   - 6.1 Safety Precautions 16
   - 6.2 Shelf Preparation/Mounting 16

6.3 Module Insertion/Removal 16
7. Wiring and Connections 17
7.1 Safety Precautions 17
7.2 Tools Required 17
7.3 Power System Chassis Ground 17
7.4 AC Feeder Protection/Sizing 17
7.5 AC Input Connections 18
7.6 Calculating Output Wire Size Requirements 18
7.7 DC Output Connections 18
7.8 CAN Serial Ports 19
8. Operation 20
8.1 Main Rectifier States 20
8.2 Main Rectifier Modes 21
8.3 Thermal Management 21
8.4 Factory Ranges and Defaults 22
9. System Startup 23
9.1 Check System Connections 23
9.2 Verify AC and Power the Shelf 23
9.3 Check Battery Polarity and Connect 23
10. Maintenance 24
11. Warranty Statement and Service Information 25
11.1 Technical Support 25
11.2 Warranty Statement 25
11.3 Product Warranty 25
11.4 Battery Warranty 25
11.5 Warranty Claims 25
11.6 Service Information 25
12. Acronyms and Definitions 26
13. Certification 27

1. Safety

SAVE THESE INSTRUCTIONS: This manual contains important safety instructions that must be followed during the installation, servicing, and maintenance of the product. Keep it in a safe place. Review the drawings and illustrations contained in this manual before proceeding. If there are any questions regarding the safe installation or operation of this product, contact Alpha Technologies or the nearest Alpha representative.

1.1 Safety Symbols

To reduce the risk of injury or death, and to ensure the continued safe operation of this product, the following symbols have been placed throughout this manual. Where these symbols appear, use extra care and attention.

The use of ATTENTION indicates specific regulatory/code requirements that may affect the placement of equipment and /or installation procedures.

NOTE:

A NOTE provides additional information to help complete a specific task or procedure. Notes are designated with a checkmark, the word NOTE, and a rule beneath which the information appears

CAUTION!

CAUTION indicates safety information intended to PREVENT DAMAGE to material or equipment. Cautions are designated with a yellow warning triangle, the word CAUTION, and a rule beneath which the information appears.

WARNING!

WARNING presents safety information to PREVENT INJURY OR DEATH to personnel. Warnings are indicated by a shock hazard icon, the word WARNING, and a rule beneath which the information appears.

HOT!

The use of HOT presents safety information to PREVENT BURNS to the technician or user.

1.2 General Warning and Cautions

WARNING!

You must read and understand the following warnings before installing the enclosure and its component. Failure to do so could result in personal injury or death.

- Read and follow all instructions included in this manual.
- Only trained personnel are qualified to install or replace this equipment and its components.
- Use proper lifting techniques whenever handling equipment, parts, or batteries.

1.3 Electrical Safety

WARNING!

Hazardous voltages are present at the input of power systems. The DC output from rectifiers and batteries, though not dangerous in voltage, has a high short-circuit current capacity that may cause severe burns and electrical arcing.

Before working with any live battery or power system, follow these precautions:

a. Remove all metallic jewelry, such as watches, rings, metal rimmed glasses, or necklaces.
b. Wear safety glasses with side shields at all times during the installation.
c. Use OSHA approved insulated hand tools. Do not rest tools on top of batteries.

WARNING!

Lethal voltages are present within the power system. Always assume that an electrical connection or conductor is energized. Check the circuit with a voltmeter with respect to the grounded portion of the enclosure (both AC and DC) before performing any installation or removal procedure.

- Do not work alone under hazardous conditions.
- A licensed electrician is required to install permanently wired equipment. Input voltages can range up to 240 Vac. Ensure that the utility power is disconnected and locked out before performing any installation or removal procedure.
- Ensure that no liquids or wet clothes come into contact with internal components.
- Hazardous electrically live parts inside this unit are energized from the batteries even when the AC input power is disconnected.
- The enclosure which contains the DC or AC power system along with customer installed radios must remain locked at all times, except when authorized service personnel are present.
- Always assume electrical connections or conductors are live. Turn off all circuit breakers and double-check with a voltmeter before performing installation or maintenance.
- Place a warning label on the utility panel to warn emergency personnel that a reserve battery source is present which will power the loads in a power outage condition or if the AC disconnect breaker is turned off.
- At high ambient temperature conditions, the internal temperature can be hot so use caution when touching the equipment.

1.4 Battery Safety

- Never transport an enclosure with batteries installed. Batteries must ONLY be installed after the enclosure has been securely set in place at its permanent installation location. Transporting the unit with batteries installed may cause a short circuit, fire, explosion, and/or damage to the battery pack, enclosure and installed equipment.
- Servicing and connection of batteries must be performed by, or under the direct supervision of, personnel knowledgeable of batteries and the required safety precautions.
- Batteries contain or emit chemicals known to cause cancer and birth defects or other reproductive harm. Battery post terminals and related accessories contain lead and lead compounds. Wash your hands after handling batteries.

WARNING!

Follow battery manufacturer's safety recommendations when working around battery systems. Do not smoke or introduce an open flame when batteries (especially vented batteries) are charging. When charging, batteries vent hydrogen gas, which can explode.

- Batteries are hazardous to the environment and should be disposed at a recycling facility. Consult the battery manufacturer for recommended local authorized recyclers.

2. Overview

A complete Cordex rectifier system consists of a controller with one or more power modules in a common shelf enclosure. The shelf has connections for AC inputs, DC output, and system communications.

Cordex rectifier modules use a high frequency, switched mode conversion technique to provide a fully regulated and isolated DC output from the AC mains. The rectifier input is wide range to allow use on 208/220/240 50/60 Hz electrical service. Rectifier power modules are “hot swappable” meaning they can be inserted or removed from the shelf without cutting power to or from the system or the load. Additional power modules can be included with the system at the time of ordering or added after the shelf has been installed.

The shelf rectifier system is designed to operate with the Alpha Cordex system controller (CXC or CXC HP).

See manual #018-570-B2 on the Alpha website.

The CXC and CXC HP allows the user to configure, monitor and control the entire power system and ancillary components from a touch screen display similar to that used in a Personal Digital Assistant (PDA). Other features of the controller include auto equalization, remote access, dial out on alarm, battery diagnostics, as well as Web server and Simple Network Management Protocol (SNMP) support for configuration and monitoring.

Details of controller operation are provided in the current version software manual.

3. Features

3.1 Front Panel

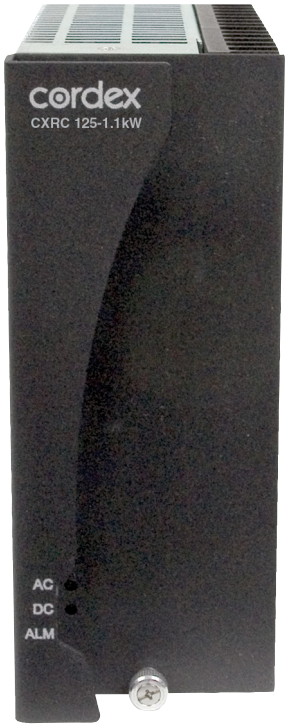

Figure 1 — Cordex 125-1.1kW rectifier front panel

3.1.1 LEDs

The front panel LEDs provide rectifier status summary and help to locate a specific module under CXC control.

AC

The top LED (green) is on when AC is within valid range. The LED will flash (~2Hz) when AC is outside the nominal range – ***AC voltage is invalid if the AC Mains Low or AC Mains High alarm is active***. The LED turns off when AC has failed (or no AC power is present).

DC

The middle LED (green) is on when the rectifier is delivering power to the load. The LED will flash when communication is lost. The LED turns off when the rectifier is off; e.g., when commanded via the CXC.

ALM (Alarm)

The bottom LED (red) is on continuously in the event of an active Module Fail alarm. The LED will flash (~2Hz) when a minor alarm is detected. The LED remains off in the absence of an alarm. If the unit output is not connected to a battery or parallel rectifier, the LED will extinguish if no AC power is present.

LED Activity During Software Upload

When a rectifier software upload is in progress, the LEDs will behave in a distinctly different way to indicate new rectifier software is being transferred from the CXC.

When a rectifier data transfer is in progress, all three LEDs will flash in a sequence lasting 1.5 seconds. When the last LED is lit, the sequence is repeated beginning at the first LED.

LED Activity During 'Locate Module' Command from CXC

When the 'locate module' command has been received from the CXC, the LEDs will behave in another distinct fashion so that the rectifier is easier to visually identify among adjacent rectifiers.

This state is entered when commanded via the CXC. The LEDs will flash in a ping-pong pattern repeating every 2 seconds.

The ping-pong pattern lights each LED sequentially. After the last LED is lit, each LED is lit in reverse sequence. When the first LED is lit, the pattern repeats. The effect makes it appear as if the light is bouncing between the first and last LED.

3.1.2 Mechanical

A thumbscrew is provided to secure the rectifier into the shelf. During normal operation lock the rectifier into position. A handle (or grip) is incorporated into the front panel to facilitate the removal of the rectifier from the shelf. No special tools are required.

3.2 Rear Panel

Located on the rear panel of the rectifier is a single connector for shelf power and communications.

3.3 True Module Fail Alarm

The rectifier modules have a "true" fail alarm. This provides a true indication of the module's ability to source current. When the module's output current drops below 2.5% of the rated output a low output current condition is detected and the Module Fail detection circuit is activated. This circuit momentarily ramps up the output voltage to determine if the module will source current. If no increase in current is detected, the Module Fail alarm is activated. The module will test once every 60 seconds for the condition until current is detected. Output voltage ramping will cease upon detection of current . A minimum 2.5% load is required to avoid the Ramp Test Fail alarm; this can typically be provided with the parallel system battery. Activation of this alarm could indicate a failed module or a failed load.

NOTE:

For Cordex rectifier systems without batteries (or with a very light load; below 2.5% of rated output) it is recommended that the ramp test be disabled to avoid nuisance alarms. The Ramp Test feature is enabled/disabled in the CXC menu item: Rectifiers > Configure Settings.

3.4 Heat Dissipation

Heat dissipation of the rectifiers is achieved through natural (bottom to top) convection cooling. The system exhausts air through the side and front vents in the rectifiers.

3.5 Over Temperature Protection

Each rectifier module is protected in the event of an excessive increase in temperature due to component failure or cooling airflow blockage. During over temperature conditions, the rectifier limits the output power as well as the output current. ***At 65°C output power and current limit are reduced to 600W***. If temperature continues to increase, a shutdown of the rectifier is initiated. The rectifier will restart automatically if the temperature has returned to a safe level.

3.6 Wide AC Range

A minor alarm is generated when the AC input voltage drops below 180Vac. Output power is reduced linearly below 150Vac to 75% of the rated output power. At a lower voltage the rectifier module will shut down and will not restart until the AC is greater than or equal to 150Vac.

For voltages above 276Vac, power factor and total harmonic distortion may be derated. For voltages between 277Vac and 320Vac, the rectifier may not be operational but will not suffer any damage.

3.7 AC Inrush/Transient Suppression

The inrush current of the rectifier module is limited to less than the nominal peak line current to prevent surge on the AC line. Modules are also protected from input lightning and transient surges in accordance with IEEE/ANSI C62.41 Category B3.

3.8 Soft Start

To eliminate an instantaneous demand on the AC source, a soft start feature is employed. Soft Start, sometimes referred to as “current walk-in”, works by gradually (up to five seconds) ramping the current limit up from zero to the actual or defined customer setting. The rectifier output voltage is ramped up from the minimum voltage to the float voltage.

3.9 Start Delay

The rectifier modules are equipped with a delay timer in order to stagger start a series of modules to prevent excessive loading of generators upon start up. The built-in timer delays the turn on of the module depending on the value selected (up to 120 seconds) via the CXC. A minimum one-second delay is preset to allow charging of the input capacitors.

3.10 Current Limit/Short Circuit Protection

The current limit function determines the maximum output current limit of the rectifier module, regardless of output voltage or power. Maximum output current is limited to a constant value down to short circuit condition. Current limiting can be used to mate the rectifier output current ampacity to the needs of the load and parallel battery to minimize excessive battery recharge current.

The rectifier will sustain a short circuit at the output terminals indefinitely. The maximum short circuit current will not exceed 105% of the rated full load current.

3.11 Power Limiting

Each rectifier module is designed to limit power output to the module specification. This enables more current to be supplied at lower output voltages, and allows matching of output to the demand of constant power loads, normally seen with telecom equipment.

This feature may also be used for a faster recharge of flooded batteries paralleled with the load.

NOTE:

Current limiting overrides the power-limiting feature.

3.12 High Voltage Shutdown (HVSD)

This feature provides protection to the load from over voltage conditions originating from the rectifiers. It operates by shutting down the offending rectifier module when a high output voltage condition occurs. Indication is through the red Alarm (Module Fail) LED. Modules will restart automatically; however, if more than three over voltage conditions occur in one minute, the module will latch off and remain shut down until it is reset via the Controller.

3.13 Battery Eliminator Operation

Rectifier modules maintain all specifications (except where indicated) with or without a battery attached in parallel to the output; however, if a battery or another module supplying DC voltage in parallel is not present, there will be no monitoring or control activity if there is an AC power failure or input fuse failure.

4. Specifications

Table A — Alpha Cordex 125-1100W 19" Integrated Shelf System Specifications	
Basic Unit, Shelf	
Maximum Output Current:	66A @100V (6 modules shelf)
Maximum Output Voltage:	160Vdc
Mechanical	
Dimensions:	309mm H x 434mm W x 302mm D (rectifier front panel 18mm D) [12.2" H x 17.1" W x 11.9" D (rectifier front panel 0.71" D)
Mounting:	19" flush mount or 19/23"
Weight:	14.38 kg (31.71 lb.)
Connections	
AC Input:	Optional DIN rail supplementary protectors (#18 to #4) or barrier style terminal blocks
Recommended Feeder Breaker	
Single Phase:	2-pole, 25A, #10AWG
Three Phase:	3-pole, 15A, #14AWG delta connection 3-pole, 10A, #14AWG wye connection
Communications:	CAN (bus) out RJ-12 offset, craft port DB-9, Ethernet RJ-45, RS-485 RJ-12 offset
DC Output:	Optional DIN rail output breakers (#18 to #2) or barrier style terminal blocks
Signal wiring:	Terminal blocks 0.129 to 6mm^2 (#26 to #10AWG)
Safety	
CSA:	C22.2 No. 60950-1-07
UL:	60950-1: 2007
CE:	Low Voltage Directive 2006/95/EC; EMC Directive 2004/108/EC, CB Scheme
IEC/EN:	60950-1:2006

Table B — Switched Mode Rectifier Cordex 125-1.1kW Specifications	
Power Module Output	
Voltage:	90 to 160Vdc within rated limits
Current:	8.8A @ 125Vdc nominal (11A maximum)
Maximum Power:	1100W continuous/module
Static Load Regulation:	Better than ±0.5% for any load change within rated limits
Dynamic Load Regulation:	Better than ±2% for 40% - 90% load step
Static Line Regulation:	Better than ±0.1% for any change in input voltage within rated limits
Dynamic Line Regulation:	Better than ±1% for any change in input voltage within rated limits
Hold-up Time:	>10ms
Time Stability:	≤0.2% per year
Temperature Stability:	≤100ppm/°C over the operating range
Heat Dissipation:	<300BTU per hour
Electrical Noise:	<20mVrms to 100MHz (wideband) <100mVp-p to 100MHz
Acoustic Noise:	<55dBa @ 1m (3ft.) @ 30°C (86°F) [individual module] <55dBa @ 1m (3ft.) @ 30°C (86°F) [four modules]
EMI:	The unit meets requirements of EN55022 (see Standards for more EMC)
Insulation:	2.5kVac input-earth, 3kVac input-output, 2kVac output-earth, 0.5kVac signals-earth

In accordance with FCC requirements, we provide the following statement as specified in the FCC guidelines for conformance to Part 15, Class A:

Note: *This equipment has been tested and found to comply with the limits for a Class A digital device, pursuant to part 15 of the FCC Rules. These limits are designed to provide reasonable protection against harmful interference when the equipment is operated in a commercial environment. This equipment generates, uses, and can radiate radio frequency energy and, if not installed and used in accordance with the instruction manual, may cause harmful interference to radio communications. Operation of this equipment in a residential area is likely to cause harmful interference in which case the user will be required to correct the interference at his own expense.*

Power Module Input	
Voltage	208 to 240Vac nominal
Extended Operation:	Low: 176 to 150Vac (power de-rated linearly to 75% output) High: 276 to 320Vac (de-rated power factor above 276Vac)
Frequency:	50/60Hz nominal (208 to 276)
Current:	5 to 5.8A (208 to 240Vac) 6.9A maximum @ 176Vac
Power Factor:	>0.99 at nominal conditions and 50-100% load; >0.98 at nominal conditions and 30-100% load
Protection:	10kA-interrupting capacity fuses in active and neutral lines
Efficiency:	>93% at nominal conditions and 50-100% load
Inrush Current:	≤ full load steady state current of the rectifier within rated limits
Start-up Ready Time:	<5 seconds (excluding soft start) to complete inrush limit routine and AC measurement (for OK signal)
Start-up Delay:	Programmable up to 120 seconds to enable stagger-start of multiple rectifiers and to minimize the effect on a supply source
Soft Start:	User adjustable to at least 5 seconds (not including start-up ready time) and is determined by output current limit ramp-up
T.H.D. (Current):	<5% at 100% load
Input Transient Suppression:	Meets ANSI/IEEE C62.41 Category B3
Input Leakage Current:	<3.5mA @ 265Vac 60Hz
Environmental	
Temperature	
Operating:	-40 to +50°C (-40 to 122°F)
Extended:	600W @ +65°C (149°F)
Storage:	-50 to +85°C (-58 to 185°F)
Humidity:	0 to 95% non-condensing
Elevation:	-500 to +4000m; derate @ -4°C/1000m above sea level (-1640 feet to 13124 feet; derate @ -7.2°F/3281 feet above sea level)
Miscellaneous	
MTBF:	>400,000 hours
Dimensions:	177mm H x 71mm W x 250mm D (excluding connector) [6.9" H x 2.8" W x 9.8" D]
Weight:	3.2 kg (7.1 lb.)

Agency Compliance	
EMC:	ICES-003 FC CFR47 Part 15 / B EN 55011 EN 55022 EN 61000-3-2: Harmonic Current Emissions EN 61000-3-3: Voltage Fluctuations and Flicker EN 61000-4-2: ESD Immunity EN 61000-4-3: Radiated Electromagnetic Immunity EN 61000-4-4: Electrical Fast Transient/Burst Immunity EN 61000-4-5: Power Line Surge Immunity EN 61000-4-6: Conducted Electromagnetic Immunity EN 61000-4-11: Voltage Dips, Short Interruptions and Variations EN 61000-6-2 EN 61000-6-4 EN 61000-6-5
Safety:	IEC 60950: Safety of Information Technology Equipment, Including Electrical Business Equipment

5. Site Evaluation and Pre-Installation

5.1 Packing Materials

Alpha is committed to providing products and services that meet our customers' needs and expectations in a sustainable manner, while complying with all relevant regulatory requirements. As such Alpha strives to follow our quality and environmental objectives from product supply and development through to the packaging for our products.

Rectifiers and batteries are shipped on individual pallets and are packaged according to the manufacturer's guidelines.

Almost all of Alpha's packaging material is from sustainable resources and or is recyclable. See the following table for the material and its environmental codes.

20 PAP/PCB	01 PET	04 PE-LD	06 PS	40 FE	41 ALU	50 NW
Cardboard	**Polyethylene Terephthalate**	**Low Density Polyethylene**	**Polystyrene**	**Steel**	**Aluminum**	**Wood**
Packing boxes Caps	Flexible film Packaging	Bubble wrap Shrink wrap Plastic bags	Foam	Strapping on pallets	Strapping on pallets	Pallets Lumber

5.1.1 Returns for Service

Save the original shipping container. If the product needs to be returned for service, it should be packaged in its original shipping container. If the original container is unavailable, make sure that the product is packed with at least three inches of shock-absorbing material to prevent shipping damage.

Alpha Technologies is not responsible for damage caused by improper packaging of returned products.

5.2 Check for Damage

Before unpacking the product, note any damage to the shipping container. Unpack the product and inspect the exterior for damage. If any damage is observed, contact the carrier immediately.

Continue the inspection for any internal damage. In the unlikely event of internal damage, inform the carrier and contact Alpha Technologies for advice on the impact of any damage.

5.3 General Receipt of Shipment

The inventory included with your shipment depends on the options you have ordered. The options are clearly marked on the shipping container labels and bill of materials.

Call Alpha Technologies if you have any questions before you proceed: 1 888 462-7487.

6. Installation

WARNING!

This system is designed to be installed in a restricted access location that is inaccessible to the general public.

Only qualified personnel should install and connect the power components within the Alpha power system. For the battery installation, refer primarily to the manufacturer's manual.

6.1 Safety Precautions

Refer to the Safety section near the front of this manual.

6.2 Shelf Preparation/Mounting

The shelf has been designed for mounting in a standard EIA 19" rack. See drawing 030-740-06.

NOTE:

The shelf must be mounted in a clean and dry environment. Allow at least 1.75" of free space above and below the unit for unrestricted cooling airflow.

Mounting brackets accommodate either 1" or 1-3/4" rack spacing. The shelf should be mounted to the rack using at least two #12 – 24 x 1/2" screws in each bracket. Philips-type screws and screwdriver should be used to eliminate the possibility of slippage and scratching of the unit's exterior. Washers (such as internal tooth) or special screws that are designed to cut through the painted surface should be used to ensure a good chassis ground.

6.3 Module Insertion/Removal

Insert by placing the module on the shelf bottom and sliding the module into the rear connector (inside of the shelf). Apply pressure on the module handle to engage the rear connector in the shelf receptacle.

Tighten the screw on the bottom of the faceplate to secure the module to the shelf.

NOTE:

Do not force a module into position if it does not seat properly. All modules are keyed to ensure that the correct module (polarity/voltage) type is used.

To remove a module, loosen the screw on the bottom of the faceplate. Grasp handle and pull out, sliding the module away from the rear connector and out of the shelf.

7. Wiring and Connections

This chapter provides cabling details and notes on cable sizing for DC applications with respect to the shelf.

NOTE:

Refer also to the drawings located at the rear of the manual.

7.1 Safety Precautions

Refer to the previous (Installation) chapter for additional safety precautions.

WARNING!

Hazardous AC voltages may be present. Ensure power at the AC service panel is off before attempting work on the AC connections. Use a voltmeter to verify the absence of voltage. Clearly mark the correct polarity of the battery leads before commencing work on DC connections.

7.2 Tools Required

Various tools are essential for product installation. Use this list as a guide:

- Slot head screwdrivers (blade sizes: 1/4", 1/8", 1/16")
- Phillips head screwdriver, #2 (tip size 3/16")
- Digital voltmeter equipped with test leads
- Adjustable 125Vdc load (optional)
- Cutters and wire strippers
- Crimping tool (optional for large gauge wire)
- Socket and rachet set (Imperial measure)

7.3 Power System Chassis Ground

WARNING!

For safety reasons, ensure the system is properly bonded to the building's ground grid. 125Vdc systems are typically floating; i.e., not connected to earth ground.

7.4 AC Feeder Protection/Sizing

To maximize system reliability, a three feed option divides the rectifiers into three groups to be supplied by three separate feeds.

It is recommended to use a dedicated protection feeder breaker, located at the AC distribution panel, to act as the disconnect device for the connected modules.

Table C — Recommended AC supply configuration

Number of Rectifiers on AC Feed	Circuit Breaker Exact Value to Use (A)	90 deg. C Wire Gauge to use at 30 deg. C ambient (AWG)
1	15	12
2	20	12

7.5 AC Input Connections

CAUTION!

CAC input wires should be routed in flexible or rigid conduit as far away as possible from the DC power wires to minimize EMI disturbances.

Remove the metal cover from the rear of the shelf to expose the wireway for the input terminal blocks.

The wireway is designed for two customer-supplied 1" conduit fittings for AC supply located on the left side of the shelf and two 3/4" conduit fittings on the rear.

Attach the conduit retainers to the wireway hole(s) and route the AC cables through. Secure the wires to the AC input and chassis ground terminals as required. Tighten the cable connector to the AC cable (conduit similar).

Replace rear cover once all connections have been completed.

7.6 Calculating Output Wire Size Requirements

Wire size is calculated by first determining the appropriate maximum voltage drop requirement. Using the formula below calculate the CMA wire size requirement. Determine the size and number of conductors required to satisfy the CMA requirement.

CMA = (A x LF x K) / AVD, where:

CMA = Cross section of wire in circular MIL area

A = Ultimate drain in amps

LF = Conductor loop feet

K = 11.1 constant factor for commercial (TW type) copper wire

AVD = Allowable voltage drop

Check again that the ampacity rating of the cable meets the requirement for the installation application. Consult local electrical codes (NEC, CEC, etc.) for guidelines. If required, increase the size of the cable to meet the code.

7.7 DC Output Connections

WARNING!

Leave cables or bus bars disconnected at battery and verify output polarity using a voltmeter. Make battery connections only after all other wiring is completed.

Use DC output wire that is UL approved XHHW or RHH/RHW (for Canadian users, RW90 Type). Control and sense wires must be UL approved Style 1015 (for Canadian users, TEW type).

Connect DC output cables at the side of the shelf and terminate cable leads with appropriate crimp lugs.

Route output cables through the side of the shelf and secure the positive and negative to the shelf output post of the correct polarity; i.e., +Vcable to +Vpost. Ensure the washers are on the bolts in the same order in which they were shipped from the factory. Tighten the bolts as per Customer Connections drawing at the rear of this manual.

Replace rear cover once all connections have been completed.

7.8 CAN Serial Ports

Connect Cordex equipment and set jumpers as shown:

Serial ports, for communications with Alpha's Cordex rectifiers and other CAN-enabled equipment, are located on the back-plane.

Daisy-chain from shelf to shelf as necessary and ensure that the last shelf is terminated with the jumper (below).

Shelving equipped for six rectifiers has one CAN IN port and one CAN OUT port.

The jumper (P1) allows setting of the CAN OUT to be open to next shelf or TERMINATED if last shelf on CAN bus, as shown here:

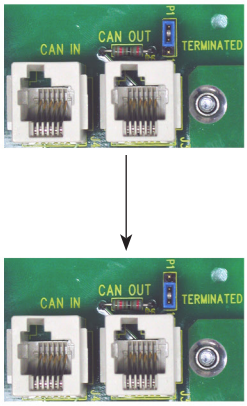

Figure 2 — CAN ports for multiple shelf connections with CXC or CXC HP

8. Operation

8.1 Main Rectifier States

Rectifier operation can be broken up into five main states:

1. Off
2. Start delay
3. Soft start
4. Normal operation
5. Turning off

Each state is characterized as being distinct and necessary for the operation of the rectifier. These states are briefly described below.

8.1.1 Off State

The rectifier will be in the Off state immediately after power is applied to the rectifier or after a rectifier shutdown. The shutdown source may be remote or local shutdown, AC shutdown, OVP or thermal shutdown.

When the rectifier is in this state the DC-DC converter is turned off and the Controller will be monitoring its inputs for the proper conditions to begin the start up sequence.

When the conditions have been met for the rectifier to start up, it will transition to the Start Delay state.

8.1.2 Start Delay State

When the rectifier is in the Start Delay state, the DC-DC converter is held off and still not sourcing power and is waiting for a given amount of time before transitioning to the next state.

When in this state, the Controller continues to monitor its inputs.

After the Start Delay state the rectifier will transition to the Soft Start state.

NOTE:

Soft start, or current walk-in, gradually increases the voltage and current output of the rectifier upon startup. This is done to reduce the instantaneous load on the AC source.

8.1.3 Soft Start State

When the Soft Start state is entered, the rectifier will be turned on and the output voltage and output current will be gradually increased. If a load is present, the rectifier will begin to source power.

When the voltage and current limit ramps have finished, the rectifier will transition to the Normal Operation state.

8.1.4 Normal Operation State

The Normal Operation state is the state that the rectifier will be in performing all of the rectifier functions and features specified herein.

From this state, the only valid transition is to the Turning Off state. This transition will happen if the rectifier is required to shutdown.

8.1.5 Turning Off State

The Turning Off state is entered because a short delay is required before the rectifier actually turns off to take care of any initialization requirements.

When this short delay has elapsed, a transition to the Off state is made.

8.2 Main Rectifier Modes

In addition to Main Rectifier States, there is a set of Main Rectifier Modes. These modes can be divided into two categories as follows:

8.2.1 Output Voltage Modes

Voltage modes can be thought of as modes that, under software control, can directly adjust the output voltage. The qualification of 'under software control' is made because there are processes that occur in the rectifier that can change the output voltage that do not adjust the output voltage directly (such as the rectifier being in current limit).

The following table lists the five Output Voltage Modes and a description of when they are active:

Table D — Output voltage modes

Output Voltage Modes	Active when...
Float	Output voltage is set to the float voltage setting.
Equalize	Output voltage is set to the equalize voltage setting.
Battery Test	Output voltage is set to the battery test voltage setting.
Safe	Output voltage is set to the safe mode voltage setting.
Manual Test	Output voltage can be manually adjusted outside of the standard adjustment ranges.

8.2.2 Output Current/Power Modes

These modes directly affect the output current and power.

The following table lists the four Output Current/Power Modes and a description of when they are active:

Table E — Output current/power modes

Output Current/Power Mode	Active when...
Temperature foldback mode	Output current and power limit have been reduced due to high temperature of the heatsink or internal ambient temperature sensor.
AC foldback mode	Output current and power limit have been reduced due to low AC input voltage. ***Note:*** *this will reduce the risk of tripping an AC breaker due to increased AC current draw as the AC voltage decreases.*
Short circuit foldback mode	Output current limit has been reduced due to a short circuit at the output.
Internal fault foldback mode	Output current limit has been reduced due to an internal fault.

8.3 Thermal Management

Heat dissipation of rectifiers is achieved through natural (bottom to top) convection cooling. Performance of the rectifiers can vary depending on the ambient temperature and whether the convection path of the exhaust air through the enclosure is hindered. A rectifier's specified performance may also be affected by adjacent rectifiers in the shelf.

8.4 Factory Ranges and Defaults

The following table lists the rectifier settings/ranges/defaults; changes are made via the CXC:

Table F — Cordex 125-1.1kW factory ranges and defaults		
Setting	**Range (minimum to maximum)**	**Default**
Float (FL) Voltage	90 – 160V	130.5V
Equalize (EQ) Voltage	90 – 160V	132.9V
Battery Test (BT) Voltage	90 – 160V	106.3V
Safe Mode Voltage	90 – 160V	118.9V
OVP	See note below – 160V	137.8V
Current Limit (CL)	9 – 100%	100%
Power Limit (PL)	0 – 100%	100%
Module Start Delay	0 – 250s	1s
System Start Delay	0 – 600s	0s
Low Voltage Alarm (LVA)	90 – 160V	106.3V
High Voltage Alarm (HVA)	90 – 160V	134.1V
EQ Timeout	1 – 2399h	30h
BT Timeout	1 – 250h	8h
Softstart Ramp-rate	Normal/Fast	Normal
CL/PL Alarm	Enable/Disable	Enable
Remote Shutdown	Enable/Disable	Enable
Ramp Test	Enable/Disable	Enable

NOTE:

OVP cannot be set below the present system/FL/EQ/BT voltage setting or the safe mode voltage of 118.9V.

9. System Startup

After completing the shelf wiring and installation, perform the following startup and test procedure to ensure proper operation:

9.1 Check System Connections

- Ensure AC is off, battery is disconnected, and all power modules are removed from the shelf.
- Triple check the polarity of all connections.

9.2 Verify AC and Power the Shelf

- Install one power module.
- Verify AC input voltage is correct and turn on the corresponding AC input feeder breaker.
- The power module OK LED should illuminate after a preset start delay.
- Using the CXC, test functionality of various module alarms and controls.

9.3 Check Battery Polarity and Connect

- Verify correct battery polarity using a voltmeter (ensuring no cells or batteries are reversed).
- Connect battery as required to the output of the system or turn on battery breaker.
- Install remaining power modules.
- In the adjustments menu of the Controller (web browser), set Float and Equalize voltage to the levels specified by the battery manufacturer.
- Using the Controller, test functionality of various module alarms and controls. In addition, perform a load test with the system using a resistive load box as needed.

10. Maintenance

Although very little maintenance is required with Alpha systems, routine checks and adjustments are recommended to ensure optimum system performance. Qualified service personnel should do the repairs.

The following table lists a few maintenance procedures for this system. These procedures should be performed at least once a year.

WARNING!

Use extreme care when working inside the unit while the system is energized. Do not make contact with live components or parts.

Circuit cards, including RAM chips, can be damaged by static electricity. Always wear a grounded wrist strap when handling or installing circuit cards.

Ensure redundant modules or batteries are used to eliminate the threat of service interruptions while performing maintenance on the system's alarms and control settings.

Table G — Sample maintenance log

Procedure	Date Completed
Clean ventilation openings.	
Inspect all system connections. Re-torque if necessary.	
Verify alarm/control settings.	
Verify alarm relay operation.	

NOTE:

There are no field replaceable parts.

11. Warranty Statement and Service Information

11.1 Technical Support

In Canada and the USA, call toll free 1-888-462-7487.

Customers outside Canada and the USA, call +1-604-436-5547.

11.2 Warranty Statement

For full information details review Alpha's online Warranty Statement at www.alpha.ca/support.

11.3 Product Warranty

Alpha warrants that for a period of two (2) years from the date of shipment its products shall be free from defects under normal authorized use consistent with the product specifications and Alpha's instructions, the terms of the manual will take precedence.

The warranty provides for repairing, replacing or issuing credit (at Alpha's discretion) for any equipment manufactured by it and returned by the customer to the factory or other authorized location during the warranty period.

There are limitations to this warranty coverage. The warranty does not provide to the customer or other parties any remedies other than the above. It does not provide coverage for any loss of profits, loss of use, costs for removal or installation of defective equipment, damages or consequential damages based upon equipment failure during or after the warranty period. No other obligations are expressed or implied. Warranty also does not cover damage or equipment failure due to cause(s) external to the unit including, but not limited to, environmental conditions, water damage, power surges or any other external influence.

The customer is responsible for all shipping and handling charges. Where products are covered under warranty Alpha will pay the cost of shipping the repaired or replacement unit back to the customer.

11.4 Battery Warranty

Note that battery warranty terms and conditions vary by battery and by intended use. Contact your Alpha sales representative or the Technical Support team at the above number to understand your entitlements under Battery Warranty.

11.5 Warranty Claims

Any claim under this Limited Warranty must be made in writing to Alpha BEFORE sending material back. Alpha will provide Product return instructions upon approval of return request. A Service Repair Order (SRO) and / or Return Authorization (RA) number will be issued ensuring that your service needs are handled promptly and efficiently.

Claims must be made online at: www.alpha.ca.

11.6 Service Information

For a list of international service centers, refer to the Alpha website: www.alpha.ca.

12. Acronyms and Definitions

AC	Alternating current
ANSI	American National Standards Institute
AWG	American Wire Gauge
BTU	British thermal unit
CAN	Controller area network
CEC	Canadian Electrical Code
CSA	Canadian Standards Association
CX	Cordex™ series; e.g., CXC for Cordex System Controller
DC	Direct current
DHCP	Dynamic Host Configuration Protocol
EIA	Electronic Industries Alliance
EMC	Electromagnetic compatibility
EMI	Electromagnetic interference
ERM	Electromagnetic Compatibility and Radio Spectrum Matters
ESD	Electrostatic Discharge
FCC	Federal Communications Commission (for the USA)
GSM	Group Speciale Mobile (global system for mobile communications)
HVSD	High voltage shutdown
IEC	International Electrotechnical Commission
IEEE	Institute of Electrical and Electronics Engineers
IP	Internet Protocol
LED	Light emitting diode
LVD	Low voltage disconnect
MIL	One thousandth of an inch; used in expressing wire cross sectional area
MOV	Metal oxide varistor
MTBF	Mean time between failures
NC	Normally closed
NEC	National Electrical Code (for the USA)
NO	Normally open
OSHA	Occupational Safety & Health Administration
OVP	Over voltage protection
RAM	Random access memory
RU	Rack unit (1.75”)
TCP/IP	Transmission Control Protocol / Internet Protocol
THD	Total harmonic distortion
UL	Underwriters Laboratories
VRLA	Valve regulated lead acid

13. Certification

About CSA and NRTL

CSA (Canadian Standards Association also known as CSA International) was established in 1919 as an independent testing laboratory in Canada. CSA received its recognition as an NRTL (Nationally Recognized Testing Laboratory) in 1992 from OSHA (Occupational Safety and Health Administration) in the United States of America (Docket No. NRTL-2-92). This was expanded and renewed in 1997, 1999, and 2001. The specific notifications were posted on OSHA's official website as follows:

- Federal Register #: 59:40602 - 40609 [08/09/1994]
- Federal Register #: 64:60240 - 60241 [11/04/1999]
- Federal Register #: 66:35271 - 35278 [07/03/2001]

When these marks appear with the indicator "C and US" or "NRTL/C" it means that the product is certified for both the US and Canadian markets, to the applicable US and Canadian standards. (1)

Alpha rectifier and power system products, bearing the aforementioned CSA marks, are certified to CSA C22.2 No. 60950-01 and UL 60950-01. Alpha UPS products, bearing the aforementioned CSA marks, are certified to CSA C22.2 No. 107.3 and UL 1778.

As part of the reciprocal, US/Canada agreement regarding testing laboratories, the Standards Council of Canada (Canada's national accreditation body) granted Underwriters Laboratories (UL) authority to certify products for sale in Canada. (2)

Only Underwriters Laboratories may grant a licence for the use of this mark, which indicates compliance with both Canadian and US requirements. (3)

NRTLs capabilities

NRTLs are third party organizations recognized by OSHA, US Department of Labor, under the

NRTL program.

The testing and certifications are based on product safety standards developed by US based standards developing organizations and are often issued by the American National Standards Institute (ANSI). (4)

The NRTL determines that a product meets the requirements of an appropriate consensus-based product safety standard either by successfully testing the product itself, or by verifying that a contract laboratory has done so, and the NRTL certifies that the product meets the requirements of the product safety standard. (4)

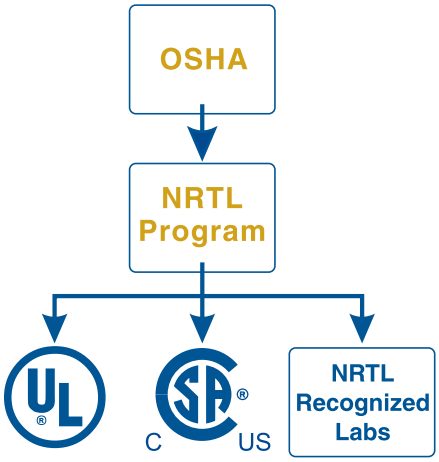

Governance of NRTL

The NRTL Program is both national and international in scope with foreign labs permitted.

(1)www.csagroup.org

(2) www.scc.ca
(3) www.ulc.ca
(4) www.osha.gov

REVISION			
LTR	DESCRIPTION	DATE	APPD

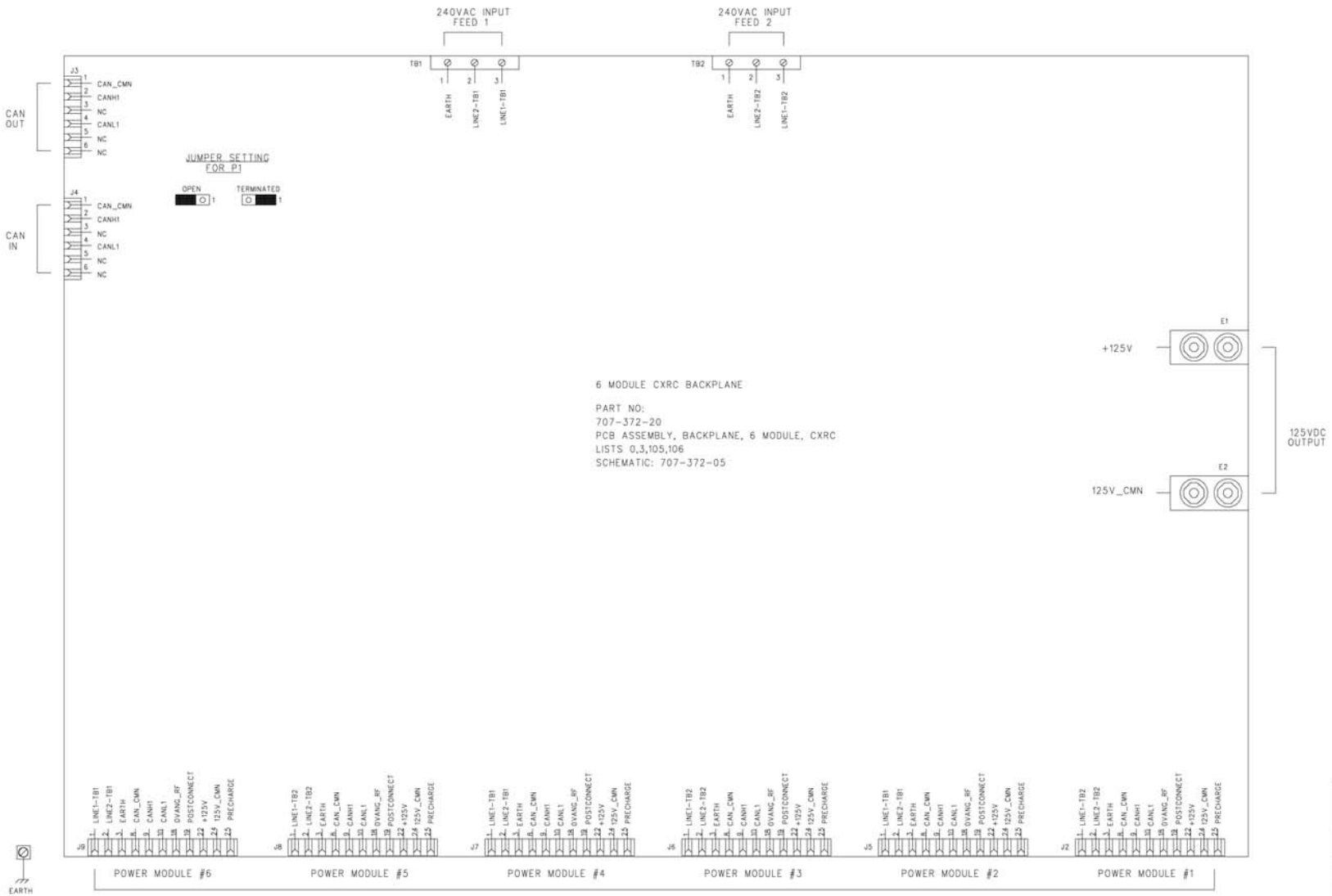

ARGUS TECHNOLOGIES

THESE DESIGNS AND SPECIFICATIONS ARE THE PROPERTY OF ARGUS TECHNOLOGIES AND SHALL NOT BE COPIED OR USED FOR MANUFACTURING WITHOUT ITS WRITTEN CONSENT.

DESIGN	WH	2004/09	MATERIAL
DRAWN	MP	2008/11	
CHECKED		2008/11	
APPROVED		2008/11	FINISH
TOLERANCES			SCALE N/A

TITLE
SCHEMATIC, SHELF, 19", FLUSH MOUNT, 6 MDL, 125-1.1kW CXRC

ISSUE DATE | SHEET 1 of 2

SIZE B | S3 | DWG NO. 030-740-05 | REV A

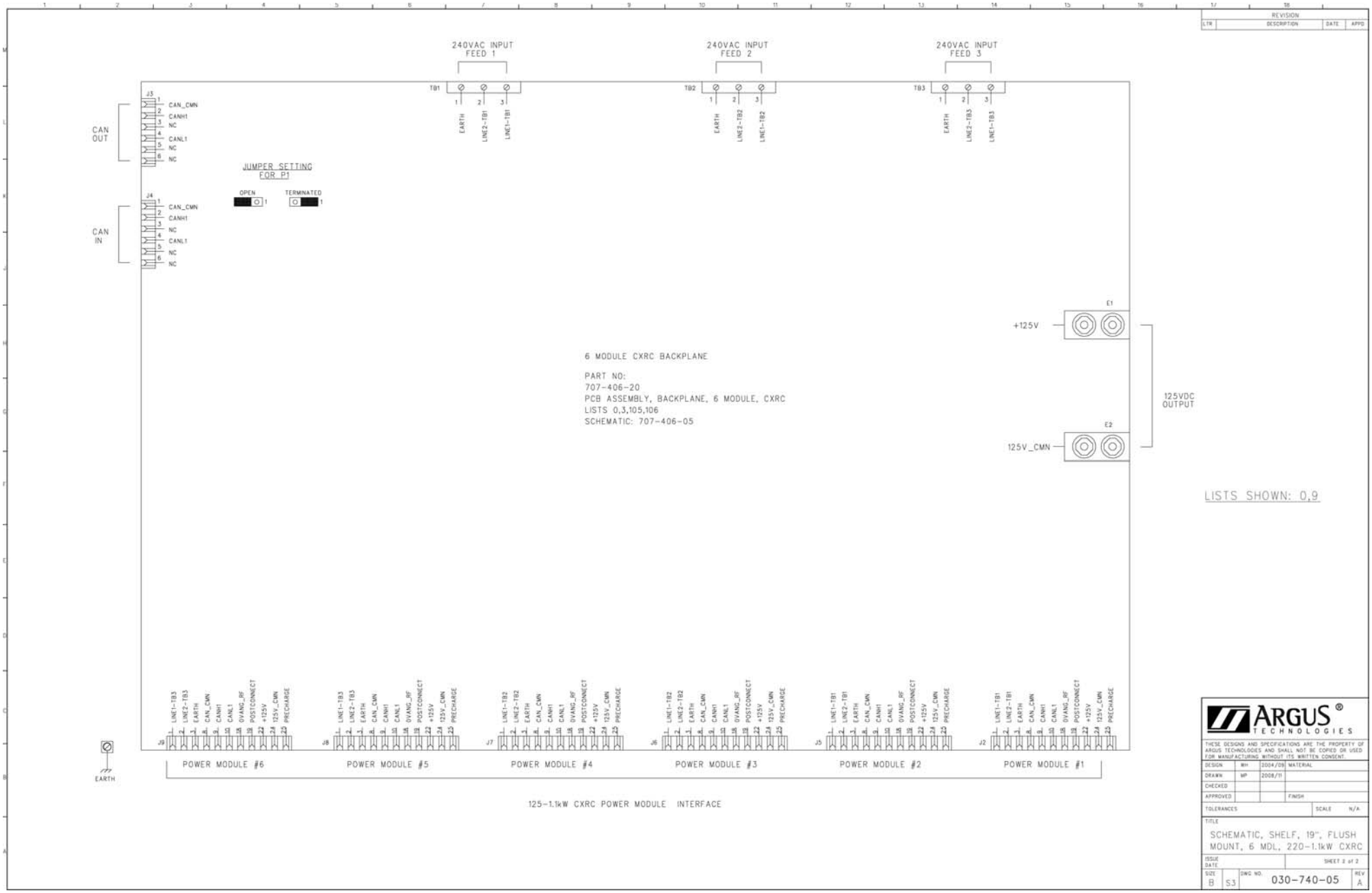
REVISION
LTR
DESCRIPTION
DATE
APPD
240VAC INPUT FEED 1
240VAC INPUT FEED 2
240VAC INPUT FEED 3
TB1
TB2
TB3
EARTH
LINE2-TB1
LINE1-TB1
LINE2-TB2
LINE1-TB2
LINE2-TB3
LINE1-TB3
J3
CAN OUT
CAN_CMN
CANH1
NC
CANL1
J4
CAN IN
JUMPER SETTING FOR P1
OPEN
TERMINATED
6 MODULE CXRC BACKPLANE
PART NO:
707-406-20
PCB ASSEMBLY, BACKPLANE, 6 MODULE, CXRC
LISTS 0,3,105,106
SCHEMATIC: 707-406-05
E1
E2
+125V
125V_CMN
125VDC OUTPUT
LISTS SHOWN: 0,9
LINE1-TB3
LINE2-TB3
EARTH
CAN_CMN
CANH1
CANL1
0VANG_RF
POSTCONNECT
+125V
125V_CMN
PRECHARGE
J9
J8
J7
J6
J5
J2
POWER MODULE #6
POWER MODULE #5
POWER MODULE #4
POWER MODULE #3
POWER MODULE #2
POWER MODULE #1
125-1.1kW CXRC POWER MODULE INTERFACE
ARGUS TECHNOLOGIES
THESE DESIGNS AND SPECIFICATIONS ARE THE PROPERTY OF ARGUS TECHNOLOGIES AND SHALL NOT BE COPIED OR USED FOR MANUFACTURING WITHOUT ITS WRITTEN CONSENT.
DESIGN
DRAWN
CHECKED
APPROVED
TOLERANCES
MATERIAL
FINISH
SCALE N/A
TITLE
SCHEMATIC, SHELF, 19", FLUSH MOUNT, 6 MDL, 220-1.1kW CXRC
ISSUE DATE
SHEET 2 of 2
SIZE B
S3
DWG NO. 030-740-05
REV A

REVISIONS				
LTR	DESCRIPTION	REV BY	DATE	APPD

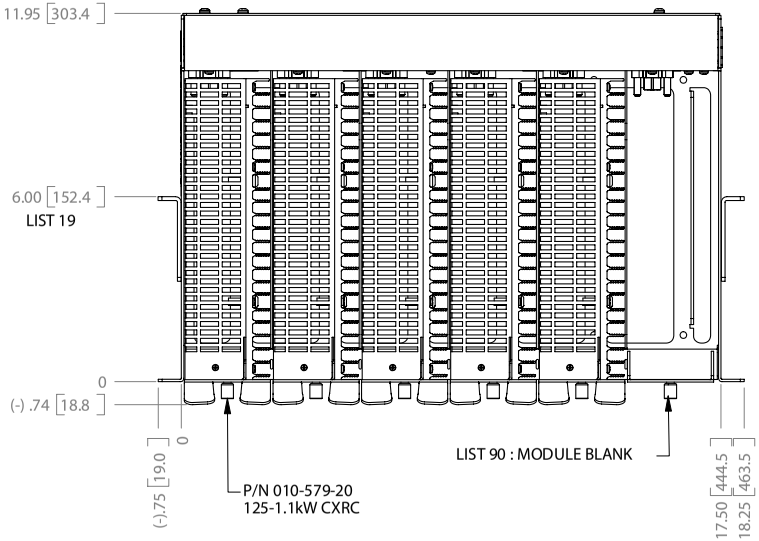

TOP VIEW

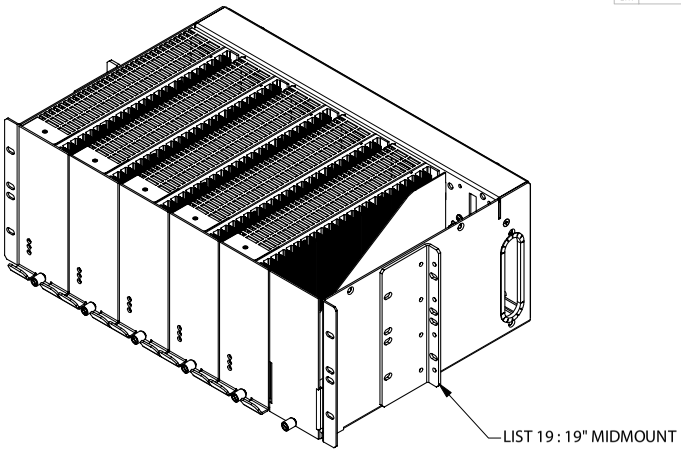

FRONT ISOMETRIC VIEW

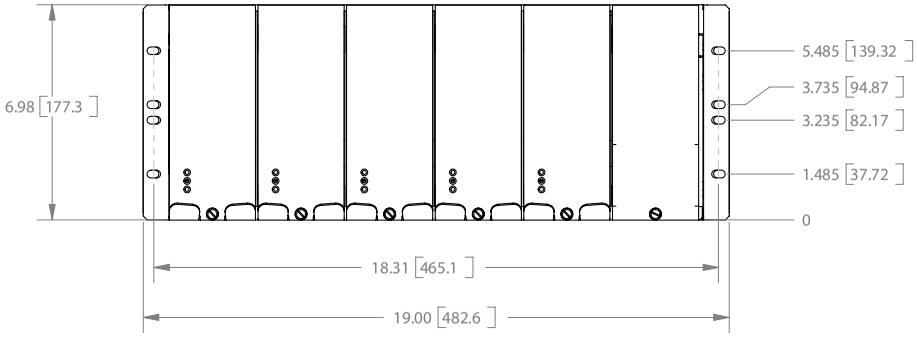

PLAN VIEW

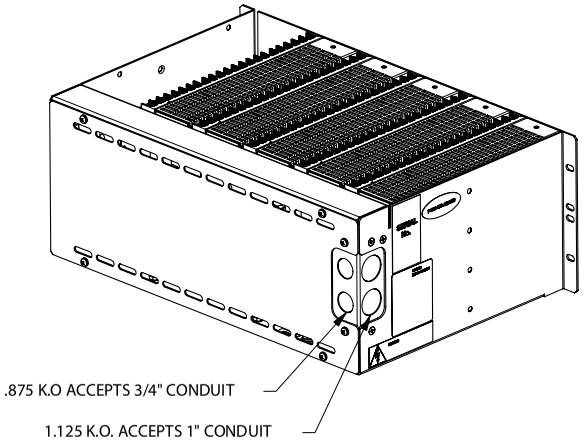

REAR ISOMETRIC VIEW

© 2003 ARGUS TECHNOLOGIES

DIMENSIONS ARE IN INCHES WITH METRIC [mm] IN BRACKETS: INCHES [mm]

ARGUS

THESE DESIGNS AND SPECIFICATIONS ARE THE PROPERTY OF ARGUS TECHNOLOGIES AND SHALL NOT BE COPIED OR USED FOR MANUFACTURING WITHOUT ITS WRITTEN CONSENT.

DESIGN	DGW	2004/12	MATERIAL
DRAWN	DGW	2004/12	
CHECKED			
APPROVED			FINISH

TOLERANCES
X.X ±0.04" [X] ±1mm
X.XX ±0.02" [X.X] ±0.5mm
X.XXX ±0.01" [X.XX] ±0.25mm

PER P.O. and Doc. 070-024-83

SCALE NTS

TITLE
OUTLINE, 19 FLUSH MOUNT CABINET
6 MDL, 125-1.1kW CXRC

ISSUE DATE

SHEET 1 OF 1

SIZE	TYPE	DWG NO.	REV
B	D2	030-740-06	A

REVISIONS				
LTR	DESCRIPTION	REV BY	DATE	APP'D

LIST 0,9 - 6 MODULE (3 FEEDS)

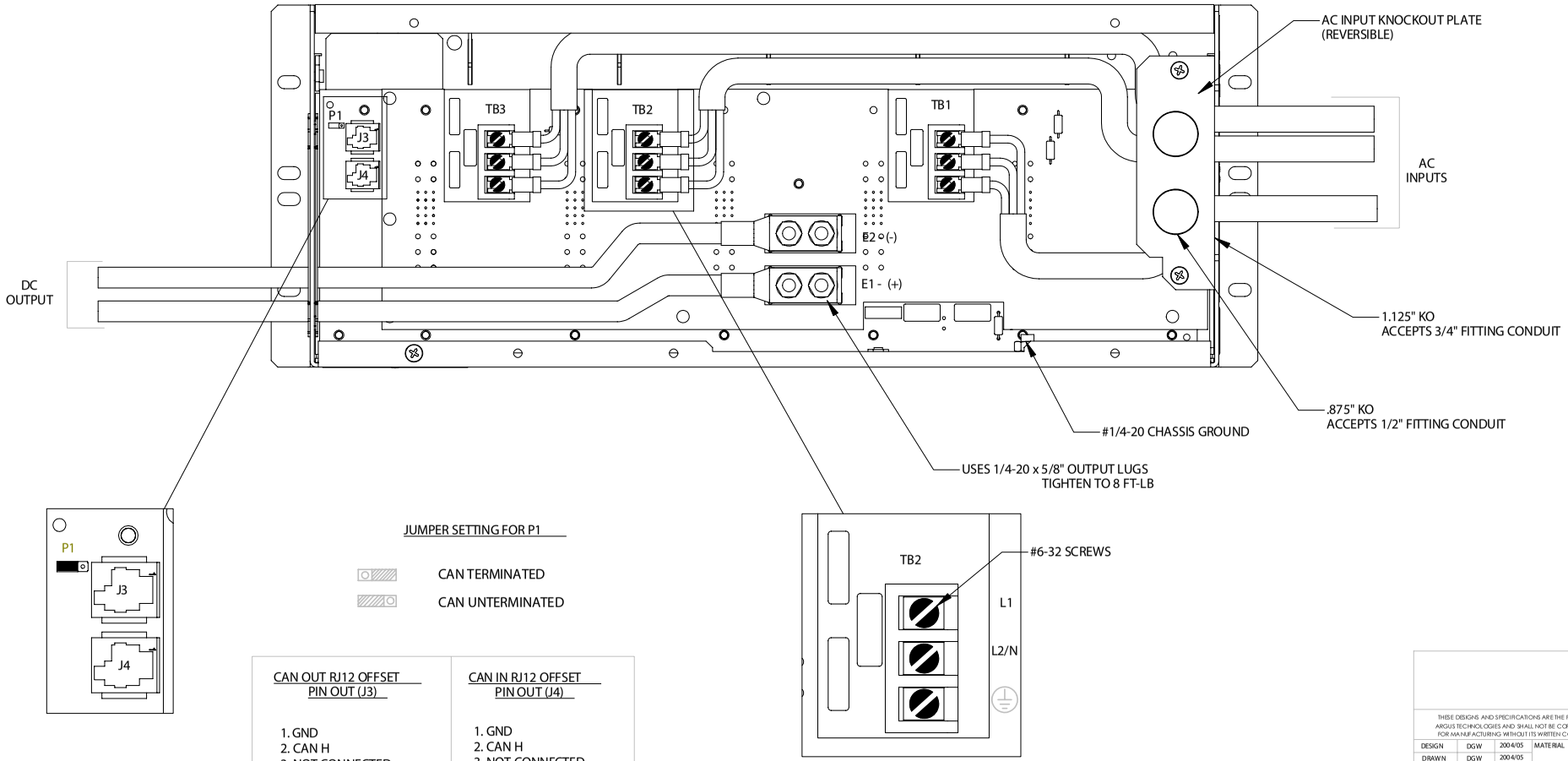

JUMPER SETTING FOR P1

CAN TERMINATED

CAN UNTERMINATED

CAN OUT RJ12 OFFSET PIN OUT (J3)	CAN IN RJ12 OFFSET PIN OUT (J4)
1. GND	1. GND
2. CAN H	2. CAN H
3. NOT CONNECTED	3. NOT CONNECTED
4. CAN L	4. CAN L
5. NOT CONNECTED	5. NOT CONNECTED
6. NOT CONNECTED	6. NOT CONNECTED

TYPICAL AC INPUT TERMINAL BLOCK

(TB2 SHOWN)
TB1 FEEDS RECTIFIERS 1 & 2
TB2 FEEDS RECTIFIERS 3 & 4
TB3 FEEDS RECTIFIERS 5 & 6

© 2004 ARGUS TECHNOLOGIES

DIMENSIONS ARE IN INCHES WITH METRIC [mm] IN BRACKETS: INCHES [mm]

THESE DESIGNS AND SPECIFICATIONS ARE THE PROPERTY OF ARGUS TECHNOLOGIES AND SHALL NOT BE COPIED OR USED FOR MANUFACTURING WITHOUT ITS WRITTEN CONSENT.

DESIGN	DGW	2004/05	MATERIAL
DRAWN	DGW	2004/05	
CHECKED	JK	2005/01	
APPROVED	CDD	2005/01	FINISH

TOLERANCES
X.X ±0.04" [X] ±1mm
X.XX ±0.02" [X.X] ±0.5mm
X.XXX ±0.01" [X.XX] ±0.25mm

PER P.O. and Doc. 070-024-83

SCALE NTS

TITLE
CUSTOMER CONNECTION,
6 MDL, 125-1.1kW
CORDEX, 19" SHELF

ISSUE DATE

SHEET 2 OF 2

SIZE	TYPE	DWG NO.	REV
B	D2	030-740-08	B

Alpha Technologies Ltd.
7700 Riverfront Gate
Burnaby, BC V5J 5M4
Canada
Tel: +1 604 436 5900
Fax: +1 604 436 1233
Toll Free: +1 800 667 8743
www.alpha.ca

Alpha Technologies Inc.
3767 Alpha Way
Bellingham, WA 98226
United States
Tel: +1 360 647 2360
Fax: +1 360 671 4936
www.alpha.com

Alpha Industrial Power Inc.
1075 Satellite Blvd NW.
Suite 400
Suwanee, GA 30024
Tel: +1 678 475 3995
Fax: +1 678 584 9259
www.alpha.com

Alpha Energy
1628 W Williams Drive
Phoenix, AZ 85027
United States
Tel: +1 623 251 3000
Fax: +1 623 249 7833
www.alphaenergy.us

Alpha Technologies GmbH.
Hansastrasse 8
91126
Schwabach, Germany
Tel: +49 9122 79889 0
Fax: +49 9122 79889 21
www.alphatechnologies.com

Alpha Technologies Europe Ltd.
Twyford House, Thorley
Bishop's Stortford
Hertfordshire, CM22 7PA
United Kingdom
Tel: +44 1279 501110
Fax: +44 1279 659870
www.alphatechnologies.com

Alphatec Ltd.
339 St. Andrews St.
Suite 101 Andrea Chambers
P.O. Box 56468
3307 Limassol, Cyprus
Tel: +357 25 375 675
Fax: +357 25 359 595
www.alpha.com

Alpha Technologies Pty Ltd.
Level 7
91 Phillip Street
Parramatta NSW 2150
Australia
Tel: +61 2 8599 6960
www.alpha.com

Alpha Innovations Brasil
Address: Rua Alvares Cabral,
Nº 338 – Diadema - SP
09981-030
Brazil
Tel: +55 11 2476 0150
www.alphainnovations.com.br

Alpha Innovations S.A.
1, Avenue Alexander Fleming
B-1348 Ottignies, Louvain-la-Neuve
Belgium
Tel: +32 10 438 510
Fax: +32 10 438 213
www.alphainnovations.eu

OutBack Power
17825 59th Ave. NE, Suite B
Arlington, WA 98223
United States
Tel: +1 360 435 6030
Fax: +1 360 435 6019
www.outbackpower.com

Alpha Tec Trading Co. Ltd.
Suite 1903, Tower 1,
China Hong Kong City,
33 Canton Road,
Kowloon, Hong Kong
Tel: +852 2736 8663
Fax: +852 2199 7988
www.alpha.com

Alpha Technologies Turkey Enerji Ltd Sti
Altaycesme Mah. Sarigul Sok. No: 33 Umut Kent
Sistesi A Blok D:5
Maltepe, Istanbul
Turkey
Tel: +90 216 370 23 28
Fax: +90 216 370 23 68
www.alpha.com.tr

Alpha Mexico Network Power S.A. de C.V.
Calle Dakota #204, of 303, Col. Nápoles.
México D.F. C.P.03810, México
Tel: +55 5543 1114
Toll Free: +01 800 0082 886
www.alphapower.mx

NavSemi Technologies Pvt Ltd.
Vikas Plaza, Plot No. 38/1A (4),
Electronic City Phase 2, Hosur Road,
Bengaluru – 560100, Karnataka, India.
Tel: +91 80 4123 0299
www.navsemi.com

Alpha Technologies Ltd.

Due to continuing product development, Alpha Technologies reserves the right to change specifications without notice.
Copyright © 2018 Alpha Technologies. All Rights Reserved. Alpha® is a registered trademark of Alpha Technologies.

030-740-B2 (05/2018)