EvoLogics GmbH
Ackerstr. 76
D-13355 Berlin
Tel.: +49 30 46068226
Fax: +49 30 46068215
Email: support@evologics.de

S2C Underwater Acoustic Modem Guide
Standard Firmware Version 1.6

September 2011

2000-2010 EvoLogics GmbH. All rights reserved.
Printed in Germany.
EvoLogics GmbH., Blumenstrasse 49, D-10243 Berlin, Germany
Trademarks: Trademarks and service marks of EvoLogics GmbH (EvoLogics) contained in this document are attributed to EvoLogics with the appropriate symbol. For queries regarding EvoLogics trademarks, contact us at the address shown above.

All other trademarks are the property of their respective holders.

Restricted Print Permission: This publication is protected by copyright and any unauthorized use of this publication may violate copyright, trademark, and other laws. Except as specified in this permission statement, this publication may not be copied, reproduced, modified, published, uploaded, posted, transmitted, or distributed in any way, without prior written permission from EvoLogics. This statement grants you permission to print one (1) hard copy of this publication subject to the following conditions:

- The publication may be used solely for personal, informational, and noncommercial purposes;
- The publication may not be modified in any way;
- Any copy of the publication or portion thereof must include all original copyright, trademark, and other proprietary notices and this permission statement; and
- EvoLogics reserves the right to revoke this authorization at any time, and any such use shall be discontinued immediately upon written notice from EvoLogics.

Disclaimer: Information in this publication is subject to change without notice and does not represent a commitment on the part of EvoLogics. The information contained herein is the proprietary and confidential information of EvoLogics or its licensors, and is supplied subject to, and may be used only by EvoLogics customer in accordance with, a written agreement between EvoLogics and its customer. Except as may be explicitly set forth in such agreement, EvoLogics does not make, and expressly disclaims, any representations or warranties as to the completeness, accuracy or usefulness of the information contained in this document. EvoLogics does not warrant that use of such information will not infringe any third party rights, nor does EvoLogics assume any liability for damages or costs of any kind that may result from use of such information.

Contents

1 Introduction **3**

2 Modem Features **3**
2.1 Data Transmissions . . . 3
2.1.1 Data Delivery Algorithms . . . 3
2.1.2 Communications Protocol . . . 4
2.1.3 Queue Management . . . 4
2.1.4 Data Compression . . . 5
2.2 Networking . . . 5
2.3 Operating Mode . . . 6
2.3.1 Data Mode . . . 6
2.3.2 Command Mode . . . 6
2.3.3 Guard Time Escape Sequence . . . 6
2.3.4 Time Independent Escape Sequence . . . 7
2.3.5 Back Escape Sequence . . . 7
2.4 Communication Mode . . . 7
2.5 Data Flow Control . . . 8
2.6 Wake-Up Module . . . 9
2.7 Position tracking . . . 9

3 Input/Output Interfaces **10**
3.1 Interface String . . . 11

4 Commands **13**
4.1 Introduction . . . 13
4.2 AT Command syntax . . . 13
4.3 Operating Mode: switching between modes . . . 15
4.3.1 `ATC`: Switch to Command Mode . . . 15
4.3.2 `ATO`: Switch to Data Mode . . . 15
4.4 Data Exchange: sending and receiving burst data or instant messages . . . 16
4.4.1 Send burst data . . . 16
4.4.2 Receive burst data . . . 16
4.4.3 `AT*SENDIM`: Send instant messages . . . 17
4.4.4 `AT?DI`: Instant message delivery status . . . 19
4.4.5 `RECVIM:`Receive instant messages . . . 20
4.5 Basic Commands: Resetting the device, dropping data, closing a connection . . . 21
4.5.1 `ATHn:` Close an acoustic connection . . . 21
4.5.2 `ATZn:` Reset the device, drop data and/or instant messages. . . . 22
4.6 Settings and requests: configuring the device . . . 23
4.6.1 `ATIn:` View firmware information. . . . 23
4.6.2 `AT?S:` Acoustic Connection Status request . . . 24
4.6.3 `AT&V`: Get device settings . . . 25
4.6.4 `AT&W`: Store settings profile . . . 27
4.6.5 `AT?L and AT!Ln`: Source Level . . . 28
4.6.6 `AT?LC and AT!LCn`: Source Level Control . . . 29
4.6.7 `AT?G and AT!Gn`: Gain . . . 30
4.6.8 `AT?C and AT!Cn`: Carrier Waveform ID . . . 31

4.6.9 AT?AL and AT!ALn: Local Address . . . 32
4.6.10 AT?AR and AT!ARn: Remote Address . . . 33
4.6.11 AT?AM: Highest Network Address . . . 34
4.6.12 AT?ZC and AT!ZCn: Cluster Size . . . 35
4.6.13 AT?ZP and AT!ZPn: Packet Time . . . 36
4.6.14 AT?RC and AT!RCn: Retry Count . . . 37
4.6.15 AT?RT and AT!RTn: Retry Timeout . . . 38
4.6.16 AT?ZI and AT!ZIn: Idle Timeout . . . 39
4.6.17 AT?ZS, AT?ZSL and AT!ZSn: Stream Number . . . 40
4.6.18 AT?ZL and AT!ZLn,m: Pool Size . . . 42
4.6.19 AT?ZD and AT!ZD: Drop counter . . . 44
4.6.20 AT?ZO and AT!ZO: Overflow Counter . . . 45
4.6.21 AT?UT and AT?UTn: System Time . . . 46
4.6.22 AT?CA and AT?CAn: Sound Speed . . . 47
4.6.23 AT?RI and AT!RIn: IM Retry Count . . . 48
4.7 Wake Up Module . . . 49
4.7.1 AT?DA and AT!DAn: Wake Up Active Time . . . 50
4.7.2 AT?DT and AT!DTn: Wake Up Period . . . 51
4.7.3 AT?ZH and AT!ZHn: Hold Timeout . . . 52
4.8 Tracking: measuring the parameters of the acoustic link. . . . 53
4.8.1 AT?BL: Local–to–remote bitrate . . . 53
4.8.2 AT?BR: Remote–to–local bitrate . . . 53
4.8.3 AT?E: RSSI . . . 54
4.8.4 AT?I: Signal Integrity Level . . . 54
4.8.5 AT?T: Propagation Time . . . 54
4.8.6 AT?V: Relative Velocity . . . 55
4.8.7 AT?P: Multipath Structure . . . 55
4.9 Positioning: tracking positioning data . . . 56
4.9.1 AT?UP: Positioning . . . 56
4.9.2 AT?UPX: Motion-Compensated Positioning . . . 57

5 Appendix I **58**
5.1 S2C Acoustic Modem Configuration Utility . . . 58
5.1.1 Network Parameters . . . 58
5.1.2 Data-Link Parameters . . . 60
5.1.3 Hayes Mode Parameters . . . 61
5.1.4 Interface String Format . . . 61

6 Appendix II **63**

1 Introduction

This document describes operating and configuring the S2C Underwater Acoustic Modem / S2C USBL Underwater Communication Device.

The manual focuses solely on the firmware of the S2C-series devices. Please refer to the S2C Quick Installation Guide for hardware installation, testing and maintenance instructions.

Along with a comprehensive overview of the firmware features, this document provides detailed information about performing communication tasks and modifying settings configurations of the S2C Underwater Acoustic Modem / S2C USBL Underwater Communication Device.

Aimed at system integration specialists, this manual is intended to serve as a comprehensive guide to the low-level command set that provides full control over S2C devices. This document is not a tutorial for programming, instead, it contains detailed descriptions of each command and examples of its application.

This manual describes the Standard version of the S2C firmware, optimized for point-to-point transmissions of large data volumes.

2 Modem Features

2.1 Data Transmissions

The highlight of S2C communication devices is the EvoLogics' patented Sweep-Spread Carrier (S2C) Communication Technology.

S2C Technology provides significant advantages for applications in underwater acoustic channels, where dynamic parameters of the environment and multipath signal propagation challenge communication efforts.

S2C communication devices achieve high data rates in underwater acoustic channels both in deep and reverberant shallow waters as adaptive algorithms adjust S2C performance to match the current channel parameters and maintain the highest bitrate possible.

In spite of the half-duplex nature of an underwater acoustic link, S2C communication devices with a proprietary data exchange protocol provide full duplex bidirectional data transmissions.

2.1.1 Data Delivery Algorithms

S2C devices support 2 types of data delivery algorithms:

- Burst data.

  An adaptive burst data delivery algorithm adjusts the S2C parameters to maintain the highest bitrate possible.

  2 communicating devices undergo a handshaking (connection establishment) procedure before the actual data transfer.

  Data to be transferred is buffered and dynamically split into packets. Acoustic channel parameters, measured during connection establishment and later during the data transfer define the optimal data packet size. A device on the receiving side then reassembles the split data into original format. The acoustic link between devices is terminated once the data has been transferred.

  See sections 4.4.1 and 4.4.2 for detailed instructions on sending and receiving burst data.

- Instant messages.

  The instant messages delivery algorithm provides an opportunity for bidirectional instant messaging even during burst data transfers. Short instant messages (up to 64 bytes) do not interrupt the burst data flow between communicating devices.

  Instant messages are transferred with a constant bitrate of 976 bps. A connection establishment procedure is not required, moreover, broadcast messaging feature allows sending instant messages to all devices in a network at once.

  See sections 4.4.3 and 4.4.5 for detailed instructions on sending and receiving instant messages.

2.1.2 Communications Protocol

The devices implements the Interwoven Packet Train Acknowledgement Protocol (IPTAP) that optimizes the channel utilization efficiency.

Burst data packets are transmitted in packet trains (clusters or sequences of packets), increasing the channel throughput. Packet delivery acknowledgements are interwoven within packet trains instead of following every single train. As there is no need to wait for the acknowledgement before transferring the next train, the channel is utilized more efficiently.

The overall number of packets in a packet train is user-configurable.

The device calculates the optimal packet size, based on the latest estimation of the acoustic channel parameters (see 4.6.12) and the upper limit, set by the user.

2.1.3 Queue Management

Every I/O interface of the device is associated with a particular data stream. Up to 8 data streams can thus share the same acoustic channel.

A packet train can contain packets from up to 8 streams. The streams are prioritized, so for every stream i, its priority p_i defines the number of its packets n_i in a shared packet train:

$$
\begin{aligned}
N_0 = N, n_0 &= 0 \\
N_i &= max(0, N_{i-1} - n_{i-1}) \\
n_i &= min(\lceil p_i N_i \rceil, m_i) \\
i &= 1...k
\end{aligned}
$$

where N is `Cluster Size` – the overall number of packets in a train, k is the `Stream Number`, an identifier assigned to the i-th stream, m_i - the number of packets in the transmission buffer of the i stream.

If an Ethernet interface is available, stream priority can be modified with the web-based Configuration Utility (see 5.1).

The table below provides examples of 2 streams sharing the packet train.

Queue management examples
Stream 1 priority: 0.5 Stream 2 priority: 1 The packet train is split 50/50 between packets from Stream 1 and Stream 2.
Stream 1 priority: 1 Stream 2 priority: 1 The packet train consists solely of Stream 1 packets until all of them are transmitted. All Stream 2 packets are transmitted next.

2.1.4 Data Compression

The device can compress data on-the-fly to transmit it faster.

This feature can be enabled/disabled for every I/O interface.

If the feature is enabled and data is compressed before being transmitted over the acoustic channel, the receiving side will decompress received data only if the compression feature is enabled there as well.

NOTE: Make sure data compression is enabled on both the transmitting and the receiving sides before transmission!

The `Interface String`, a text string with parameters of an interface, contains a `|zlib` suffix if data compression is enabled for the associated data stream (see sections 3.1 and 4.6.17).

Use the web-based Configuration Utility (see 5.1) to enable/disable data compression if an Ethernet interface is available. The Configuration Utility is not accessible via RS-232.

If an Ethernet interface is not available, data compression for RS-232 interfaces can be enabled/disabled with a firmware update utility, contact EvoLogics for more information.

2.2 Networking

The basic networking features of S2C Underwater Acoustic Modems and S2C USBL Underwater Communication Devices are listed below.

- Addressable data exchange.

  Every device has its unique network address.

  Each device can be easily addressed for burst data transmissions or instant message exchange.

  The network address of the device can be changed with AT commands, see section 4.6.9.

- Broadcast messages

  Short instant messages can be transmitted in Broadcast Mode, when an instant message is sent to every device in the network (see 4.4.3).

- Backoff State

  Collision resolution algorithms are implemented to handle conflicts between devices contending for channel access.

  If a device detects an ongoing acoustic connection between other devices in the network, it goes into Backoff State and for a random Backoff Timeout becomes unavailable for acoustic communication. In Backoff State the device will decline any connection establishment requests and will not accept input data for transmission.

2.3 Operating Mode

AT Commands

All S2C devices are controlled by a specific command language - a set of AT commands.

AT commands provide full control over functions of an S2C device.

The AT command set contains commands for all communication operations, commands for viewing, modifying and saving device settings, commands for tracking communication parameters and position tracking etc.

An AT command is a short text string that instructs the device to perform an action. See section 4 for detailed information on AT command syntax and descriptions.

The S2C Underwater Acoustic Modem / S2C USBL Underwater Communication Device supports 2 operating modes - the Data Mode and the Command Mode.

2.3.1 Data Mode

The device starts in Data Mode by default. Data Mode is ideal for transferring large amounts of burst data between two devices.

In Data Mode all incoming host data is treated as burst data to be immediately transmitted over the acoustic channel.

All burst data, received from the remote side, is sent directly to the I/O interface.

Switch the device to Command Mode or use the Time Independent Escape Sequence to execute AT commands.

2.3.2 Command Mode

In Command Mode all incoming host data is treated as commands that must be immediately executed. The Command Mode was designed as an interface for software programming and manual operations.

The Command Mode is by default enabled on one of the I/O interfaces, the control interface.

NOTE: Enabling the Command Mode on more than one interface leads to unpredicted behaviour! Use only one interface to access the device in Command Mode.

2.3.3 Guard Time Escape Sequence

The Guard Time Escape Sequence is a control sequence – a series of characters that switches the device into Command Mode.

The control sequence is `+++`.

To make sure the sequence is distinguished from random data, a 1 second delay (guard time) must precede and follow the control sequence. Only a pause `+++` pause sequence, encountered in the stream of burst data, will be recognized as the Guard Time Escape Sequence.

The device will respond with an `OK` synchronous message (see 4 for more information) once it has entered Command Mode.

Every input data is from then on treated as commands. See section 4 for command syntax and descriptions.

Several AT commands switch the device back to Data Mode. See sections 4.3.1 and 4.5.2 in the Commands section 4.

NOTE: A Wake Up Module-equipped device can take up to 6 seconds to switch unto Command Mode.

2.3.4 Time Independent Escape Sequence

Time Independent Escape Sequence (TIES) is a string that consists of an AT command, appended to the control sequence `+++`:

```
+++<AT command><end of line>
```

TIES allows executing the AT command it contains without leaving the Data Mode.

No guard time is necessary for the TIES to be distinguished from burst data, as the TIES string itself triggers AT command execution.

Intervals between TIES-characters input must not exceed 1 second for the string to be recognized as TIES.

TIES must end with a control character `<end of line>` - an end of line marker that terminates the TIES string. The standard terminal software used to access the device automatically adds an end of line marker to the TIES string when you press `Enter`.

The end of line is a syntactical element and does not appear in the command line of the standard terminal.

Which end of line marker - line feed or carriage return - ends a TIES string depends on the interface and the terminal software used to access the device. Ethernet terminals use the line feed (`\n`), serial terminals - the carriage return (`\r`). The Ethernet interface of the device is by default configured for a line feed end of line character, a RS-232 interface – for a carriage return.

NOTE: TIES strings with unknown AT commands or AT commands in wrong format are treated as burst data and will be delivered to the remote device.

2.3.5 Back Escape Sequence

A Back Escape Sequence (BES) is a message the local device sends to the I/O interface as a response to a TIES (synchronous message) or after having received data from the remote side (asynchronous message). Read more about synchronous and asynchronous messages in section 4.2.

```
+++<AT command>:<length>:<message><end of line>
```

`AT command` is the command contained in the preceding TIES, `length` is the length (in bytes) of the `message`. The `message` can contain binary data.

The BES string ends with a `\r` `\n` combination of command characters as the `<end of line>` marker.

2.4 Communication Mode

S2C devices support different Communication Modes that define a device's behavior in various communication scenarios.

Communication Mode determines which actions are performed automatically.

Automatic Active Mode

This device operates in Automatic Active Mode.

In Automatic Active Mode the device automatically initializes a handshaking procedure once it receives data for transmission.

It terminates the acoustic link after the data transmission is completed and no more data is received from the remote device. See 4.6.16 and the section below for more information on closing an acoustic link.

An acoustic link can be explicitly terminated with an AT command, see 4.5.1.

2.5 Data Flow Control

After receiving data from the host, the device establishes an acoustic connection and transmits data to the destination address.

After the transmission ends, the devices keep the acoustic link online by exchanging internal service data (tracking the acoustic channel parameters and/or positioning information).

To save battery power, the device can stop service data exchange and close the acoustic connection. If a Wake Up Module is installed, it can save more energy by turning off all parts of the device but itself.

- If no data flow is detected during Idle Timeout, the device will terminate the connection after Idle Timeout expires.

  (Transmissions of data or data delivery acknowledgements in either direction are considered a data flow.)

  If the current absence of a data flow was caused by unfavorable conditions of the acoustic channel, the device drops data that might be buffered for transmission. Dropped bytes are accounted for every data stream.

  Once the connection is closed, the device is ready to accept new connection establishment requests.

- After the connection is closed, a Wake Up Module-equipped device (see 2.6) stays on until the `Hold Timeout` (define it with 4.7.3) expires. If no new connection is initialized by either the host or the remote side during `Hold Timeout`, all parts of the device, except the Wake Up Module, are turned off.

2.6 Wake-Up Module

The Wake Up Module is an optional integrated electronic unit that can turn parts of the device off to save power.

The Wake Up Module helps optimizing power consumption for battery-powered deployments by checking for incoming acoustic signals or incoming data on the host interface and turning rest of the device on only when such a signal is detected. Once the device completes receiving or transmitting data, everything but the Wake Up Module is switched off.

The Wake Up Module always reacts on incoming data on the RS-232 host interface. It initializes a wake-up procedure that turns the rest of the device on and buffers all incoming data until the device is ready to proceed (about 5 seconds). Data is then transferred to the device that transmits it over the acoustic channel.

To save energy, the Wake Up Module monitors the acoustic channel in an on/off toggle cycle. It reacts on incoming acoustic signals only when it is active. An idle Wake Up Module does not detect incoming acoustic signals. The AT command set includes commands to set up the acoustic channel monitoring cycle, see sections 4.7.1 and 4.7.2. The cycle parameters can be easily adjusted to meet the requirements for average energy consumption.

NOTE: Baudrate of an RS-232 interface is limited to 19200 bps when a Wake Up Module is installed.

The Wake Up Module is incompatible with Ethernet interfaces.

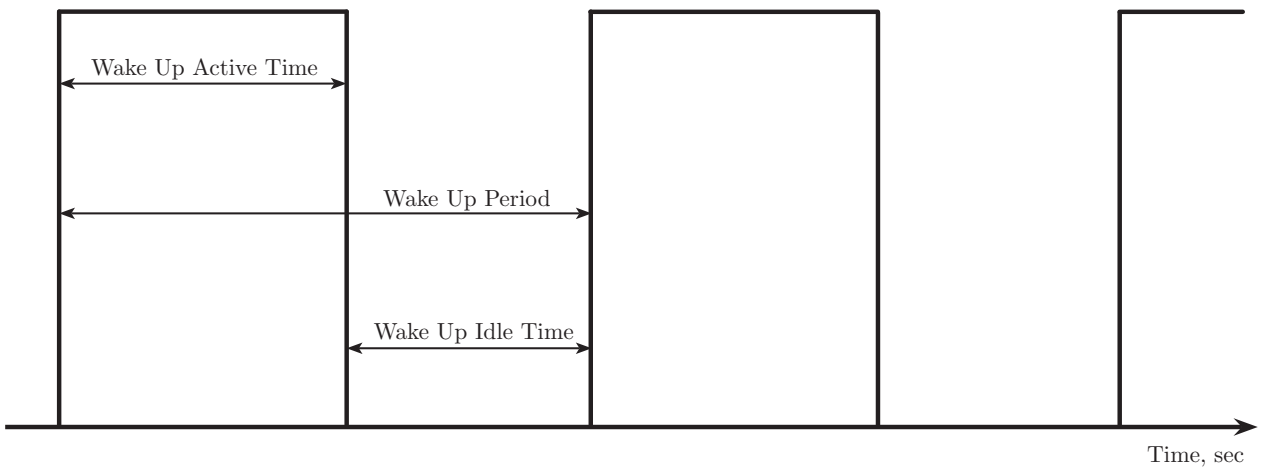

Figure 1: The Wake Up toggle cycle

2.7 Position tracking

Acoustic positioning is available only for S2C USBL series devices.

S2C USBL communication and positioning devices provide 3D position tracking simultaneously with data transmissions. A time–, cost– and energy–saving solution, the S2C USBL device does not switch between communication mode and positioning mode, instead, positioning data is calculated during acoustic communication.

S2C USBL devices can be optionally combined with an internal or external motion sensor to provide pitch, roll and yaw compensation of the USBL antenna movements.

See sections 4.9.1 and 4.9.2 for position tracking commands.

3 Input/Output Interfaces

An S2C Underwater Acoustic Modem / S2C USBL Underwater Communication Device can be equipped with RS-232 (serial) and Ethernet (TCP/IP) input/output (I/O) interfaces.

Up to 8 I/O interfaces can be configured.

Each interface is associated with a particular data stream. Data streams can be reassigned between interfaces (see 4.6.17).

Interfaces are configured by editing `Interface Strings`, text strings with current interface parameters.

The basic interface configuration is a data interface. Data interfaces do not support Command Mode and asynchronous messages, every input is treated as data to be transmitted over the acoustic channel.

So called "filters" can be applied to an interface to enable additional features.

With a filter, one of the interfaces is by default configured as the control interface.

The control interface supports the AT command set, the Command Mode, when all input data is treated as commands, and asynchronous messages (see 4). Only one interface can be configured as a control interface.

The web-based Configuration Utility (see 5.1) allows configuring interfaces via Ethernet. The Configuration Utility is not accessible via RS-232.

If an Ethernet interface is not available, `Interface Strings` can be reconfigured with a firmware update utility, contact EvoLogics for more information.

NOTE: Changing interface configurations is an advanced task and may require additional support from EvoLogics. We recommend consulting EvoLogics before changing interface configurations.

3.1 Interface String

An `Interface String` is a text string that describes the current configuration of an I/O interface.

The `Interface String` defines the interface type, interface name and interface parameters. The `Interface String` ends with a list of filters if additional features are enabled for the interface.

Interface parameters are different for serial and TCP/IP interfaces, see the tables below for the `Interface String` format descriptions.

Use commands, described in 4.6.17 to view the list of interfaces and the associated stream numbers of the device.

The web-based Configuration Utility (see 5.1) allows configuring interfaces via Ethernet. The Configuration Utility is not accessible via RS-232.

If an Ethernet interface is not available, RS-232 interfaces can be reconfigured with a firmware update utility, contact EvoLogics for more information.

RS-232 Interface

The serial connection configuration is 8-N-1:

Start bit: 1 Data bits: 8 Parity: N (none) Stop bit: 1

The `Interface String` format is following:

```
serial:///dev/ttyS1:B<Baudrate>[|at][|zlib]
```

Parameters in square brackets are optional filters. A vertical bar `|` separates the filters.

NOTE: The filters are order-sensitive!

	RS-232
`Baudrate`	2.4 - 115.2 Kbps The maximum baudrate is limited to 19200 bps when a Wake Up Module is installed.
`|at`	Control interface. The "at" filter: this interface implements the Standard version of the AT command set.
`|zlib`	Data compression filter. Data compression is on when `zlib` is appended.

The default end of line marker is carriage return `\r`. The default end of line marker can be omitted in the `Interface String`.

Recommended client software to access the device via RS-232: HyperTerminal, minicom, putty.

Ethernet Interface

The `Interface String` format is following:

```
tcp://<ip>:<port>:lr[|at -l \n][|zlib]
```

Parameters in square brackets are optional filters. A vertical bar `|` separates the filters.

NOTE: The filters are order-sensitive!

The default end of line marker is line feed `\n`. It is appended to the "at" filter.

If `<ip>` is set to 0.0.0.0, the device listens on every IP address in the subnet.

	Ethernet
`<ip>`	IP address.
`<port>`	Port number.
`|at`	Control interface. The "at" filter: this interface implements the Standard version of the AT command set.
`|zlib`	Data compression filter. Data compression is on when `zlib` is appended.

By default, the device is configured in the subnet 192.168.0.0/24.

The IP address and network mask of the device can be changed with a web-based Configuration Utility.

Recommended client software to access the device via Ethernet: netcat.

4 Commands

4.1 Introduction

The AT command set controls every aspect of device operation. A similar Hayes command set is the industry standard for modem communications.

AT commands allow modifying, applying and storing device settings and setting configurations. The device supports AT commands for transmitting various types of data, tracking communication parameters or estimating positioning data.

4.2 AT Command syntax

This section contains general notes about AT command syntax. Individual commands are described in detail in sections that follow.

The AT command syntax is case-sensitive. Only upper-case characters are accepted.

All command statements begin with an `AT` prefix, where "AT" stands for "ATtention code". The device is thus signalized that a command is to follow.

Each command ends with a control character - an end of line marker that terminates the command statement. The standard terminal software used to access the device automatically adds an end of line marker to the command string when you press `Enter`.

The end of line is a syntactical element and does not appear in the command line of the standard terminal.

Which end of line marker - line feed (`\n`) or carriage return (`\r`) - ends a command string depends on the interface and the terminal software used to access the device. Ethernet terminals use the line feed (`\n`), serial terminals - the carriage return (`\r`). The Ethernet interface of the device is by default configured for a line feed (`\n`) end of line character, a RS-232 interface – for a carriage return (`\r`).

All messages the device sends back end with a `\r\n` combination of command characters as the end of line marker.

Command length is limited to 1054 characters. An error message is generated if the limit is exceeded.

The local device follows any input data with a synchronous message. Synchronous message is a message the local device sends back to the I/O interface as an immediate response to a command.

Synchronous messages include:

- notifications that indicate if the command to change a setting or perform an action is accepted for execution;
- requested values or value lists if the command was a setting request;
- error messages that indicate syntax errors or invalid values, that the command is out of context or conflicts with other tasks etc.

Wait for the synchronous message before sending another command to the device. Characters, sent between a command and the corresponding synchronous message might be ignored, resulting in undefined behaviour.

Whenever an instant message is received from a remote source, the local device sends an asynchronous message to the I/O interface.

Asynchronous messages are independent reports and can appear between a local command and the corresponding synchronous message.

Asynchronous messages include:

- an instant-message-received-message that contains transmission parameters and the instant message itself (see `RECVIM`, section 4.4.5);
- an instant message delivery report that notifies if instant message delivery was acknowledged by the remote side (see `AT*SENDIM`, section 4.4.3).

Both synchronous and asynchronous messages end with a `\r\n` combination of command characters as the end of line marker.

See the chapters below for individual command syntax and descriptions.

Commands starting with `AT?` are requests that return a setting value or a value list currently in use.

Commands that start with `AT!` set a new value to the corresponding setting.

In the sections below, `n` at the end of an `AT!` command describes command options. `n` is a number, the ranges are defined in individual command descriptions.

NOTE: you can skip `0` at the end of a command. The device treats `AT!L` and `AT!L0` as the same statement.

4.3 Operating Mode: switching between modes

4.3.1 `ATC`: Switch to Command Mode

`ATC` switches the device into Command Mode.

This command is an alternative to the Guard Time Escape Sequence (GTES). When used as a part of a Time Independent Escape Sequence (TIES, see section 2.3.4), it spares the guard time intervals that a GTES demands.

The device replies with an `OK` synchronous message after having switched to Command Mode.

A typical `ATC` application scenario is listed below.

	Example `ATC`
`+++ATC`	TIES with the command.
`OK`	Synchronous message, the device is in Command Mode.
`AT*SENDIM,4,2,ack,test`	Send IM to address 2.
`DELIVEREDIM,2`	The IM was delivered.
`ATO`	Switch to Data Mode.

4.3.2 `ATO`: Switch to Data Mode

Use `ATO` to switch the device from Command Mode into Data Mode, where all input data is treated as burst data.

The device does not reply with a synchronous message, it is ready to transmit data immediately.

A typical `ATO` application scenario is listed below.

	Example `ATO`
`+++`	Guard Time Escape Sequence, switching to Command Mode.
`OK`	Synchronous message, the device is in Command Mode.
`AT*SENDIM,4,2,ack,test`	Send IM to address 2.
`DELIVEREDIM,2`	The IM was delivered.
`ATO`	Switch to Data Mode.

4.4 Data Exchange: sending and receiving burst data or instant messages

4.4.1 Send burst data

When in Data Mode, any data sent to the I/O interface will be transmitted to a particular remote device as burst data. The network address of the remote device is defined by the `Remote Address` setting (see section 4.6.10).

Before sending data make sure that:

- Both the local and the remote devices share the same data stream, i.e. their `Stream Number` settings match (see `Stream Number`, section 4.6.17).
- An acoustic connection can be established - the `Carrier Waveform ID` identifiers of the local and the remote devices match one of the allowed combinations (see `Carrier Waveform ID`, section 4.6.8);
- The maximum length of a data packet is identical for both communicating devices (see `Packet Time`, section 4.6.13);
- The `Highest Network Address` settings of the devices match (see section 4.6.11).
- Data compression is enabled (disabled) on both the transmitting and the receiving sides (see section 2.1.4).

4.4.2 Receive burst data

Receiving burst data in Data mode is automatic - all incoming data is sent directly to the I/O interface.

If burst data is received while the device is in Command mode, the data is buffered and sent to the I/O interface after the device switches to Data Mode.

4.4.3 AT*SENDIM: Send instant messages

Use AT*SENDIM to send an instant message (IM).

Before sending an instant message make sure that:

- Both the local and the remote devices share the same data stream, i.e. their Stream Number settings match (see Stream Number, section 4.6.17).
- An acoustic connection can be established - the Carrier Waveform ID identifiers of the local and the remote devices match one of the allowed combinations (see Carrier Waveform ID, section 4.6.8);
- The Highest Network Address settings of the devices match (see section 4.6.11).

AT*SENDIM,<length>,<destination address>,<flag>,<data>

Here an instant message in form of a binary data array <data> of length <length> bytes is to be delivered to a remote device with an address <destination address>.

The message length is limited to 64 bytes.

See the parameter descriptions in the table below.

		Parameter Description
<data>		The instant message – a binary data array
<length>		Message length - the data array length, max. 64 bytes
<destination address>		Network address of the remote device
Unicast Mode	1..<max address>	The message will be sent to a particular address
Broadcast Mode	255	The message will be sent to all network devices
	0	Reserved for future use
<flag>	ack	The local device requests an instant message delivery acknowledgment. If the remote side does not acknowledge successful instant message delivery, the local device will transmit the message again. Set the number of retries with AT!RI, see IM Retry Count, section 4.6.23 View the current IM Retry Count with AT?RI Message delivery can not be acknowledged in Broadcast Mode, the noack setting must be used.
	noack	The local device does not request an instant message delivery acknowledgment. The instant message will be transmitted once. A delivery report will not be generated.

NOTE: If flag is ack in broadcast mode, a syntax error will be detected.

See section 4.6.11 for the <max address> that defines the highest network address of a device.

In Unicast Mode the instant message will be delivered to a particular remote device.

In Broadcast Mode the instant message will be sent to all communication devices in the network. To send a message in Broadcast Mode, simply enter the broadcast address as message destination address.

You can define whether the remote device should acknowledge a successful unicast message delivery. Please note that broadcast messages, sent to all communication devices in the network, can not be acknowledged.

The local device will respond with a synchronous message.

	Notifications
OK	The command is accepted and can be performed.
BUSY DELIVERING DATA TO <address>	The channel is busy with a pending data delivery.
BUSY RECEIVING DATA FROM <address>	The channel is busy with a pending data reception.
BUSY CLOSING CONNECTION WITH <address>	The channel is busy with a pending connection termination.
BUSY BACKOFF STATE	The channel is busy, the local device is in Backoff state (see AT?S, section 4.6.2).
ERROR WRONG DESTINATION ADDRESS	<destination address> matches the local address
ERROR WRONG FORMAT	The command contains syntax errors.

If flag is ack, the local device will generate a delivery report, an asynchronous delivery acknowledgement message from the remote device.

	Delivery Reports
DELIVEREDIM,<destination address>	Instant message delivery was successful.
FAILEDIM,<destination address>	Instant message delivery was not acknowledged. NOTE: a FAILED report means the local device did not receive a delivery acknowledgment. The instant message may actually be delivered.

A typical AT*SENDIM application scenario is listed below.

	Example SENDIM
+++	Switch to Command Mode
OK	
AT?S	Request the acoustic connection status
INITIATION LISTEN 16384	
AT*SENDIM,4,10,ack,test	Send IM to address 10 with acknowledgement request
OK	
DELIVEREDIM,10	Data was successfully delivered
AT*SENDIM,4,10,noack,test	Send IM to address 10 without acknowledgement
OK	request
AT*SENDIM,4,11,noack,test	Sending an IM to address 11 fails – the destination
ERROR WRONG DESTINATION ADDRESS	address matches the local address
AT*SENDIM,4,12,ack,test	Send IM to address 12
BUSY BACKOFF STATE	The device is in Backoff State

4.4.4 `AT?DI`: Instant message delivery status

Use `AT?DI` to request the status of an instant message delivery.

A synchronous message will indicate the current message delivery status.

Request		Instant message delivery status
`AT?DI`	`EMPTY`	No instant messages are being delivered
	`DELIVERING`	Instant message delivery pending
	`FAILED`	Instant message delivery failed

A typical `AT?DI` application scenario is listed below.

	Example `AT?DI`
`+++AT?DI`	Get the current delivery status
`+++AT?DI:5:EMPTY`	No messages are being delivered
`+++AT*SENDIM,4,12,ack,test`	Send IM to address 12
`+++AT*SENDIM:2:OK`	
`+++AT?DI`	
`+++AT?DI:10:DELIVERING`	The IM is being delivered
`+++AT*SENDIM:14:DELIVEREDIM,12`	Asynchronous message – the delivery report
`+++AT?DI`	Request the delivery status
`+++AT?DI:5:EMPTY`	No messages are being delivered

4.4.5 RECVIM: Receive instant messages

Upon successful instant message reception, the device automatically generates an asynchronous RECVIM message:

```
RECVIM,<length>,<source address>,<destination address>,<flag>,
<bitrate>,<rssi>,<integrity>,<propagation time>,<velocity>,<data>
```

Here an instant message in form of a binary data array <data> of length <length> bytes was received from a remote device with an address <source address>.

See the parameter descriptions in the table below.

		Parameter Description
<data>		The instant message – a binary data array
<length>		Packet length - data array length, max. 64 bytes
<source address>	1..<max address>	Network address of the remote device
	0	Reserved for future use
<destination address>		Network address of the remote device
Unicast Mode	1..<max address>	Network address of the recipient
Broadcast Mode	255	Broadcast: the IM was sent to all network devices
<flag>	ack	The remote device requested an instant message delivery acknowledgment.
	noack	The remote device did not request an instant message delivery acknowledgment.
<bitrate>		Raw bitrate of the remote-to-local acoustic connection, constant for instant messages: 976 bps
<rssi>		Received Signal Strength Indicator. See section 4.8.3. Signed number.
<integrity>		Incoming signal integrity level. See section 4.8.4.
<propagation time>		The acoustic signal's propagation delay (us). See section 4.8.5.
<velocity>		Relative velocity of the devices (m/s). See section 4.8.6. Signed number.

See section 4.6.11 for the <max address> that defines the highest network address of a device.

A typical RECVIM scenario is listed below.

	Example RECVIM
+++	Switch to Command Mode
OK	
AT?AL	Request the local network address
60	The local address is 60
RECVIM,4,5,60,ack,976,-40,120,645193,0.1000,test	Asynchronous message – IM received from address 5, addressed to the local device

4.5 Basic Commands: Resetting the device, dropping data, closing a connection

4.5.1 `ATHn`: Close an acoustic connection

Use `ATHn` to close an acoustic connection to a remote device.

See the table below for command options.

Command	Options		Description
`ATHn`	`n`	0	Graceful disconnect. Close an acoustic connection.
		1	Forced disconnect. Terminate an acoustic connection.

The local device will respond with a synchronous notification message.

Notification	Description
`OK`	The command is accepted and can be performed.
`ERROR OUT OF CONTEXT`	The command is out of context (for example, trying to terminate a non-existing connection).
`ERROR OUT OF RANGE`	The value is out of range.
`ERROR WRONG FORMAT`	The command contains syntax errors.

Typical examples of `ATHn` application are listed below.

	Example `ATH0`
`test data test data`	Send burst data.
`+++`	Switch to Command Mode
`OK`	
`ATH0`	Close acoustic connection
`OK`	
`ATH`	
`ERROR OUT OF CONTEXT`	The command is out of context, no connection is established at the moment

	Example `ATH1`
`test data test data`	Send burst data.
`+++`	Switch to Command Mode
`OK`	
`ATH1`	Terminate connection
`OK`	

4.5.2 `ATZn`: Reset the device, drop data and/or instant messages.

Use `ATZn` to:

- reset the device
- drop burst data from the transmission buffer and close the acoustic connection
- drop burst data or instant messages from the transmission buffer
- clear all data from the transmission buffer

See the table below for command options.

Command	Options		Description
`ATZn`	`n`	0	Reset the device to default settings and restart it. NOTE: No synchronous notification message. Any open TCP connections will be closed.
		1	Drop burst data and terminate the acoustic connection.
		2	Reserved for future use.
		3	Drop instant messages.
		4	Clear the transmission buffer – drop burst data and instant messages.

The local device will respond with a synchronous notification message.

NOTE: Both `ATZ1` and `ATZ2` perform the same action. Use either of the options to drop burst data and terminate the acoustic connection.

Notification	Description
`OK`	The command is accepted and can be performed.
`ERROR OUT OF CONTEXT`	The command is out of context (for example, trying to terminate a non-existing connection).
`ERROR OUT OF RANGE`	The value is out of range.
`ERROR WRONG FORMAT`	The command contains syntax errors.

A typical example of `ATZn` application is listed below.

	Example `ATZ1`
`test data test data`	Send burst data.
`+++`	Switch to Command Mode
`OK`	
`ATH1`	Drop burst data and terminate the connection.
`OK`	Synchronous notification message.

4.6 Settings and requests: configuring the device

This section describes viewing, configuring and storing device settings with AT commands.

Use the commands listed below to view or change individual settings. Please note, that some settings can not be changed when an acoustic connection is active. These changes apply after a communication link is closed (see the following chapters).

After shutdown or reset the settings are automatically restored to those saved in a settings profile. You can save the new set of settings to the profile to use them after reset or shutdown.

View setting lists, store settings

4.6.1 `ATIn`: View firmware information.

`ATI` requests the current version numbers of the firmware, the physical layer protocol and the data-link layer protocol.

See the table below for command options.

Command	Options		Description
`ATIn`	`n`	0	Get firmware major version number.
		1	Get physical layer protocol version and data-link layer protocol version.

The local device will respond with a synchronous notification message.

Notification		Description
`n`	0	`<Firmware Version Number>`
	1	`<Physical Layer Protocol>,<Data-Link Layer Protocol>`
`ERROR OUT OF RANGE`		The value is out of range.
`ERROR WRONG FORMAT`		The command contains syntax errors.

A typical example of `ATIn` application is listed below.

	Example `ATZ1`
`+++`	Switch to Command Mode
`OK`	
`ATI0`	Request the current firmware version
`1.6`	Synchronous message – the firmware version number
`ATI1`	Request the physical and data–layer protocol versions
`phy: 0x40803016, mac: v1.6-0`	
`ATI2`	The `n` is out of range
`ERROR OUT OF RANGE`	
`ATI?`	
`ERROR WRONG FORMAT`	

4.6.2 AT?S: Acoustic Connection Status request

Use AT?S to get the current acoustic connection status.

The local device will respond with a synchronous message:

```
<acoustic link status> <pool status>
```

<pool status> is a space-separated list of available free transmission buffer space (in bytes).

The free space is counted for every data stream. The entries correspond to data streams, they are not sorted by stream numbers, but match the fixed positions of the interfaces in the Interface List (see 3.1). Use AT?ZSL to see the Interface List with Interface Strings and corresponding Stream Numbers.

NOTE: The buffer might contain compressed data, the values can differ from those based on the input data size.

The <acoustic link status> is described in the table below.

Parameter		Description
Acoustic Link Status	OFFLINE	Initial state after switching on/reset.
	OFFLINE CONNECTION FAILED	Acoustic connection failed.
	OFFLINE TERMINATED	Internal error occurred, device must reset.
	OFFLINE ALARM	Acoustic connection failed.
	INITIATION LISTEN	The device is ready for immediate connection initiated by the remote side.
	INITIATION ESTABLISH	The device attempts to establish an acoustic connection with the remote side.
	INITIATION DISCONNECT	Acoustic connection is being closed.
	ONLINE	Acoustic connection established and active.
	BACKOFF	An acoustic connection between other network nodes is detected. Local device will stay in Backoff state for for a random Backoff Timeout interval.

A typical example of AT?S application is listed below.

Example AT?S	
+++AT?S	Request the acoustic connection status.
+++AT?S:22:INITIATION LISTEN 8192	
test test test	Send burst data.
+++AT?S	
+++AT?S:25:INITIATION ESTABLISH 8187	
+++AT?S	
+++AT?S:18:ONLINE 8187	
+++AT?S	
+++AT?S:26:INITIATION DISCONNECT 8192	

4.6.3 AT&V: Get device settings

Use AT&V to request current device settings.

The local device will respond with a synchronous message that lists the device settings. See the table below.

Setting	Description
Source Level	The transmission's SPL, dB re 1 uPa.
Source Level Control	Source level control mode.
Gain	Input amplifier gain.
Carrier Waveform ID	Carrier waveform identifier.
Local Address	Network address of the local device.
Cluster Size	Maximum number of packets in a packet train.
Packet Time	Maximum duration of a data packet, ms.
Retry Count	Number of connection establishment retries.
Retry Timeout	Acoustic connection establishment retry timeout, ms.
Wake Up Active Time	Active interval of the acoustic channel monitoring cycle, s.
Wake Up Period	Total duration of the acoustic channel monitoring cycle, s.
Sound Speed	Speed of sound in water, m/s.
IM Retry Count	Instant message delivery retries.
Pool size	Transmission buffer size, b.
Drop Counter	Dropped bytes counter, b.
Overflow Counter	Bytes dropped due to buffer overflow, b.
Hold Timeout	Shutdown after transmission timeout, s.
Idle Timeout	Closing an idle acoustic connection timeout, s.

NOTE: Some settings can not be changed unless the acoustic link is either in OFFLINE or INITIATION LISTEN state.

These settings are listed with a [*] mark. Applying a new value is deferred until the device enters OFFLINE or INITIATION LISTEN.

A typical example of AT&V application is listed below.

	Example AT&V
test data test data	Send burst data.
+++	Switch to Command Mode
OK	
AT&V	View the list of current settings.
Source Level: 3	
Source Level Control: 0	
AT&V	
Source Level: 3	
Source Level Control: 0	
Gain: 0	
Carrier Waveform ID: 2	
Local Address: 11	
Cluster Size: 10	
Packet Time: 1000	
Retry Count: 10	
Retry Timeout: 2500	
Wake Up Active Time: 1	
Wake Up Period: 12	
Sound Speed: 1500	
IM Retry Count: 1	
Pool Size: 16384 8192	
Drop Counter: 0 0	
Overflow Counter: 0 0	
Hold Timeout: 0	
Idle Timeout: 60	
AT!L2	Set Source Level to 2.
[*]OK	The setting is deferred.
AT&V	View the list of current settings.
[*]Source Level: 2	The setting is deferred as the device is ONLINE while delivering data.
Source Level Control: 0	
Gain: 0	
Carrier Waveform ID: 2	
Local Address: 11	
Cluster Size: 10	
. . .	a few rows are skipped
Pool Size: 16384 8192	
Drop Counter: 0 0	
Overflow Counter: 0 0	
Hold Timeout: 0	
Idle Timeout: 60	

4.6.4 AT&W: Store settings profile

Use AT&W to store the current set of settings in the non-volatile memory of the device.

These values will be applied after reset or shutdown.

Please note, that the current System Time value will not be saved to a profile. See section 4.6.21 for more information on System Time.

If the current set of settings contains deferred values, they will be stored to the profile, not the values that remain valid before the device enters OFFLINE or INITIATION LISTEN.

NOTE: Storing the values to a profile does not mean applying them immediately. Deferred settings remain deferred.

The local device will respond with a synchronous notification message.

Notification	Description
OK	The command is accepted and can be performed.
ERROR CONFIGURATION NOT STORED	An internal error occurred, try again. Contact EvoLogics Support if the error persists.
ERROR WRONG FORMAT	The command contains syntax errors.

A typical example of AT&W application is listed below.

	Example AT&W
+++	Switch to Command Mode
OK	
AT?L	View the current Source Level
3	Source Level is 3.
AT!L1	Change Source Level to 1.
[*]OK	The setting will be deferred.
AT?L	View the current Source Level.
[*]1	The deferred Source Level setting is 1.
AT&W	Store settings profile.
OK	
AT!L2	Change Source Level to 2.
[*]OK	The setting will be deferred.
AT?L	View the current Source Level.
[*]2	The deferred Source Level setting is 2.
ATZ	Restart the device.
OK	
AT&V	View the setting list.
Source Level: 1	The Source Level is 1. This setting was stored to profile and applies after reset
Source Level Control: 0	
Gain: 0	
. . .	a few rows are skipped
Overflow Counter: 0 0	
Hold Timeout: 0	
Idle Timeout: 60	

Change device settings

Use the following commands to view and/or change individual device settings.

New values are valid until the device is reset or turned off. To use a set of settings after reset, store it to non-volatile memory with `AT&W` (see 4.6.4).

NOTE: Some settings can not be changed unless the acoustic link is either in `OFFLINE` or `INITIATION LISTEN` state. These settings are displayed with a `[*]` prefix. Applying a new value is deferred until the device enters `OFFLINE` or `INITIATION LISTEN`.

4.6.5 `AT?L` and `AT!Ln`: Source Level

`Source Level` defines the sound pressure level (SPL) in transmission mode.

View Setting	Change Setting	Options		Description
`AT?L`	`AT!Ln`	`n`	0	Maximum SPL.
			1	Maximum – 6 dB.
			2	Maximum – 12 dB.
			3	Maximum - 20 dB.

Refer to the Factory Certificate of the device for the maximum SPL value. The maximum SPL depends on the type of the S2C device, see the example below:

	`Source Level`	SPL, dB re 1 uPa
S2CR 48/78 Underwater Acoustic Modem	0	184 The Factory Certificate value
	1	178
	2	172
	3	164

The local device will respond with a synchronous notification message.

Notifications View Setting	Description
`<Source Level>`	The current value.
`[*]<Source Level>`	The value will be applied when the device enters `OFFLINE`, `INITIATION LISTEN`, or before a transmission.

Notifications Change Setting	Description
`OK`	The command is accepted and will be applied immediately.
`[*]OK`	The value will be applied when the device enters `OFFLINE`, `INITIATION LISTEN`, or before a transmission.
`ERROR OUT OF RANGE`	The value is out of range.
`ERROR WRONG FORMAT`	The command contains syntax errors.

A deferred `Source Level` setting is automatically applied before a burst data or instant message transmission.

A typical example of `AT?L` and `AT!Ln` application is listed below.

	Example AT?L and AT!Ln
test data test data	Send burst data.
+++	Switch to Command Mode
OK	
AT?L	Request the current Source Level.
2	The current Source Level is 2.
AT!L3	Set Source Level to 3
[*]OK	The setting is deferred.
AT?L	Get current Source Level.
3	The current Source Level is 3 - the setting was applied once the device has left ONLINE state.
AT!L4	
ERROR OUT OF RANGE	

4.6.6 AT?LC and AT!LCn: Source Level Control

Source Level Control defines if the Source Level of the local device can be changed remotely via an acoustic link.

The local device will automatically adopt the Source Level value of the remote device during connection establishment if Source Level Control is set to 1.

NOTE: If Source Level Control is set to 1, the new Source Level setting, adopted from the remote device, will be automatically stored to the local non-volatile memory (to the settings profile, see 4.6.4).

View Setting	Change Setting	Options		Description
AT?LC	AT!LCn	n	0	The local Source Level setting can not be changed by a remote device.
			1	The local device's Source Level setting can be changed by a remote device. The local device will adopt the remote device's Source Level setting during connection establishment.

The local device will respond with a synchronous notification message.

Notifications View Setting	Description
<Source Level Control>	The current value.
[*]<Source Level Control>	The value will be applied when the device enters OFFLINE or INITIATION LISTEN.

Notifications Change Setting	Description
OK	The command is accepted and will be applied immediately.
[*]OK	The value will be applied when the device enters OFFLINE or INITIATION LISTEN.
ERROR OUT OF RANGE	The value is out of range.
ERROR WRONG FORMAT	The command contains syntax errors.

A typical example of AT?LC and AT!LCn application is listed below.

	Example AT?LC and AT!LCn
+++	Switch to Command Mode
OK	
AT?LC	Get the current Source Level Control.
0	The current Source Level Control is 0.
AT?L	Get the current Source Level.
3	The current Source Level is 3.
AT!LC1	Set Source Level Control to 1.
OK	
AT?LC	
1	
ATO	Switch to Data Mode.
+++AT?L	Get the current Source Level
+++AT?L:1:2	The local device adopted the Source Level value of the remote device during data transmission.

4.6.7 AT?G and AT!Gn: Gain

Use the Gain setting to adjust the input amplifier gain. The low gain setting is recommended for short-distance communication or when testing the device.

View Setting	Change Setting	Options		Description
AT?G	AT!Gn	n	0	Normal gain, corresponds to high sensitivity.
			1	Low gain, corresponds to -20dB reduced sensitivity. Recommended for short distances or testing purposes.

The local device will respond with a synchronous notification message.

Notifications View Setting	Description
<Gain>	The current value.
[*]<Gain>	The value will be applied when the device enters OFFLINE, INITIATION LISTEN, or before a transmission.

Notifications Change Setting	Description
OK	The command is accepted and will be applied immediately.
[*]OK	The value will be applied when the device enters OFFLINE, INITIATION LISTEN, or before a transmission.
ERROR OUT OF RANGE	The value is out of range.
ERROR WRONG FORMAT	The command contains syntax errors.

A deferred Gain setting is automatically applied before a burst data or instant message transmission.

A typical example of AT?G and AT!Gn application is listed below.

	Example AT?G and AT!Gn
test data test data	Send burst data.
+++	Switch to Command Mode
OK	
AT?G	Get the current Gain setting.
0	
AT!G1	Set Gain to 1.
[*]OK	The setting is deferred.
AT?G	The new Gain setting is now applied.
1	
AT!G2	
ERROR OUT OF RANGE	
AT?G1	
ERROR WRONG FORMAT	

4.6.8 AT?C and AT!Cn: Carrier Waveform ID

Each device has a Carrier Waveform ID - an identifier used for acoustic connection establishment. It defines the unique properties of the signal's waveform.

An acoustic link can only be established between devices with specific Carrier Waveform ID combinations. These are:

- 0-1
- 2-2

We recommend using the 0 - 1 combination for communications between 2 devices and the 2 - 2 combination for networking.

View Setting	Change Setting	Options	Range
AT?C	AT!Cn	n	0..3

The local device will respond with a synchronous notification message.

Notifications View Setting	Description
<Carrier Waveform ID>	The current value.
[*]<Carrier Waveform ID>	The value will be applied when the device enters OFFLINE, INITIATION LISTEN, or before a transmission.

Notifications Change Setting	Description
OK	The command is accepted and will be applied immediately.
[*]OK	The value will be applied when the device enters OFFLINE, INITIATION LISTEN, or before an transmission.
ERROR OUT OF RANGE	The value is out of range.
ERROR WRONG FORMAT	The command contains syntax errors.

A deferred Carrier Waveform ID setting is automatically applied before a burst data or instant message transmission.

A typical example of AT?C and AT!Cn application is listed below.

	Example AT?C and AT!Cn
test data test data	Send burst data.
+++	Switch to Command Mode
OK	
AT?C	Get the current <Carrier Waveform ID>.
2	
AT!C3	Set the <Carrier Waveform ID> to 3.
[*]OK	The setting is deferred.
AT?C	The new <Carrier Waveform ID> setting is now applied.
3	
AT!C4	
ERROR OUT OF RANGE	
AT?C2	
ERROR WRONG FORMAT	

4.6.9 AT?AL and AT!ALn: Local Address

Local Address is the network address of the local device.

The highest network address the device can take up is defined by the <max address> parameter. Request its value with AT?AM, see section 4.6.11.

View Setting	Change Setting	Options	Range
AT?AL	AT!ALn	n	0..max address

The local device will respond with a synchronous notification message.

Notifications View Setting	Description
<Local address>	The current value.
[*]<Local address>	The value will be applied when the device enters OFFLINE or INITIATION LISTEN.

Notifications Change Setting	Description
OK	The command is accepted and will be applied immediately.
[*]OK	The value will be applied when the device enters OFFLINE or INITIATION LISTEN.
ERROR OUT OF RANGE	The value is out of range.
ERROR WRONG FORMAT	The command contains syntax errors.

A typical example of AT?AL and AT!ALn application is listed below.

	Example AT?AL and AT!ALn
test data test data	Send burst data.
+++	Switch to Command Mode
OK	
AT?AL	Get the current Local Address.
12	
AT!AL2	Set the Local Address to 2.
[*]OK	The setting is deferred.
AT?S	Get the Acoustic Connection Status
ONLINE 19254	
AT?S	
INITIATION LISTEN 20000	
AT?AL	
2	The new Local Address setting is applied.
AT?AL3	
ERROR WRONG FORMAT	
AT!AL16	
ERROR OUT OF RANGE	

4.6.10 AT?AR and AT!ARn: Remote Address

Remote Address is the network address of a remote device that the local device communicates with.

This setting defines the remote network address for burst data transmissions and instant message exchange.

In Data Mode, all data the local device receives from the I/O interface will be delivered to the device with a Remote Address network address. Unless Remote Address is 0, the local device will not transmit or receive data and instant messages to/from other devices.

If the Remote Address is 0, the local device will accept a connection establishment request or an instant message from any device. It will automatically adopt that device's network address as the new Remote Address.

The device will send a Back Escape Sequence (BES)

+++AT?AR:<length>:<Remote Address><\r\n>

to the I/O interface once a new Remote Address value is applied.

The highest possible Remote Address value is defined by the <max address> parameter that defines the highest address in a network. Request its value with AT?AM, see section 4.6.11.

View Setting	Change Setting	Options	Range
AT?AR	AT!ARn	n	0..max address

The local device will respond with a synchronous notification message.

Notifications View Setting	Description
<Remote address>	The current value.
[*]<Remote address>	The value will be applied when the device enters OFFLINE or INITIATION LISTEN.

A typical example of AT?AR and AT!ARn application is listed below.

Notifications Change Setting	Description
OK	The command is accepted and will be applied immediately.
[*]OK	The value will be applied when the device enters OFFLINE or INITIATION LISTEN.
ERROR BUFFER IS NOT EMPTY	The buffer is not empty, the setting can not be modified.
ERROR OUT OF RANGE	The value is out of range.
ERROR WRONG FORMAT	The command contains syntax errors.

	Example AT?AR and AT!ARn
+++ATC	Switch to Command Mode
AT!AR12	Set Remote Address to 12.
OK	A new value is applied.
AT?AR3	
ERROR WRONG FORMAT	
AT!AL16	
ERROR OUT OF RANGE	

4.6.11 AT?AM: Highest Network Address

A network address of the device can take up values that range from 1 up to <max address> (inclusive).

Use AT?AM to request the <max address> of the device.

<max address> represents the highest address in a network and thus limits the amount of devices that comprise it. <max address> values must match for all devices in a network. Note, that network address 255 is reserved for instant message Broadcast Mode, when an instant message is delivered to all devices in a network.

The highest network address can be changed with a firmware update utility, contact Evo-Logics for more information.

The local device will respond with a synchronous notification message.

View Value	Notification	Example AT?AM	
		+++	Switch to Command Mode
		OK	
		AT?AM	
		62	The <Highest Network Address> is 62
		AT!AM	
		ERROR WRONG FORMAT	

4.6.12 AT?ZC and AT!ZCn: Cluster Size

To transmit data, the device formats it into packets. They are then transmitted in packet trains (clusters).

Use `Cluster Size` to define the number of packets in a train.

The system throughput is higher when packet trains are long (large `Cluster Size`). On the other hand, longer packet trains slow down the algorithms that adapt the bitrate to the dynamics of the acoustic channel. A slow adaptation can reduce the net bitrate. It is recommended to set the `Cluster Size` to a lower value (less than 10) for communications between moving objects. In stationary cases the `Cluster Size` may be essentially higher (up to 32).

View Setting	Change Setting	Options	Range
AT?ZC	AT!ZCn	n	1..255

The local device will respond with a synchronous notification message.

Notifications View Setting	Description
<Cluster Size>	The current value.
[*]<Cluster Size>	The value will be applied when the device enters OFFLINE or INITIATION LISTEN.

Notifications Change Setting	Description
OK	The command is accepted and will be applied immediately.
[*]OK	The value will be applied when the device enters OFFLINE or INITIATION LISTEN.
ERROR OUT OF RANGE	The value is out of range.
ERROR WRONG FORMAT	The command contains syntax errors.

A typical example of AT?ZC and AT!ZCn application is listed below.

	Example AT?ZC and AT!ZCn
test data test data	Send burst data.
+++	Switch to Command Mode
OK	
AT?ZC	Get the current `Cluster Size`.
10	
AT!ZC15	Set the `Cluster Size` to 15.
[*]OK	The setting is deferred.
AT?ZC	The new `Cluster Size` setting is applied.
15	
AT?ZC20	
ERROR WRONG FORMAT	
AT!ZC256	
ERROR OUT OF RANGE	

4.6.13 AT?ZP and AT!ZPn: Packet Time

Packet Time defines the maximum duration of a data packet.

For every packet train, the device automatically calculates and implements an optimal packet size (and thus its duration) based on the estimated parameters of the acoustic channel.

Use AT!ZPn to limit the maximum duration of data packet(in ms).

Shorter Packet Time is recommended for challenging hydroacoustic channels with high dynamics.

NOTE: Packet Time values must be equal for all devices in the network, establishing an acoustic connection would otherwise be impossible.

View Setting	Change Setting	Options	Range
AT?ZP	AT!ZPn	n	50..1000 (ms)

The local device will respond with a synchronous notification message.

Notifications View Setting	Description
<Packet Time>	The current value.
[*]<Packet Time>	The value will be applied when the device enters OFFLINE or INITIATION LISTEN.

Notifications Change Setting	Description
OK	The command is accepted and will be applied immediately.
[*]OK	The value will be applied when the device enters OFFLINE or INITIATION LISTEN.
ERROR OUT OF RANGE	The value is out of range.
ERROR WRONG FORMAT	The command contains syntax errors.

A typical example of AT?ZP and AT!ZPn application is listed below.

	Example AT?ZP and AT!ZPn
test data test data	Send burst data.
+++	Switch to Command Mode
OK	
AT?ZP	Get the current Packet Time.
1000	
AT!ZP900	Set the Packet Time to 900 ms.
[*]OK	The setting is deferred.
AT?ZP	The new Packet Time setting is applied.
900	
AT?ZP80	
ERROR WRONG FORMAT	
AT!ZP45	
ERROR OUT OF RANGE	
AT!ZP1200	
ERROR OUT OF RANGE	

4.6.14 AT?RC and AT!RCn: Retry Count

Retry Count is a number of connection establishment retries.

This setting defines, how many times will the device retry to establish an acoustic connection.

Retry Count is decremented if the device retries establishing a new acoustic connection or tries to reestablish a broken acoustic link.

After successful connection establishment Retry Count is reset to the initial value.

View Setting	Change Setting	Options	Range
AT?RC	AT!RCn	n	0..255

The local device will respond with a synchronous notification message.

Notifications View Setting	Description
<Retry Count>	The current value.
[*]<Retry Count>	The value will be applied when the device enters OFFLINE or INITIATION LISTEN.

Notifications Change Setting	Description
OK	The command is accepted and will be applied immediately.
[*]OK	The value will be applied when the device enters OFFLINE or INITIATION LISTEN.
ERROR OUT OF RANGE	The value is out of range.
ERROR WRONG FORMAT	The command contains syntax errors.

A typical example of AT?RC and AT!RCn application is listed below.

	Example AT?RC and AT!RCn
test data test data	Send burst data.
+++	Switch to Command Mode
OK	
AT?RC	Get the current Retry Count.
10	
AT!RC11	Set the Retry Count to 11.
[*]OK	The setting is deferred.
AT?RC	The new Retry Count setting is applied.
11	
AT?RC100	
ERROR WRONG FORMAT	
AT!RC257	
ERROR OUT OF RANGE	

4.6.15 AT?RT and AT!RTn: Retry Timeout

Retry Timeout is the time interval (in ms) that the device waits for a response to its acoustic connection establishment request.

If the remote device does not respond during Retry Timeout, the local device reattempts to establish an acoustic connection.

The number of retries is defined by Retry Count, see 4.6.14

NOTE: the Retry Timeout value should exceed the round-trip time that corresponds to the device's maximum operational range.

View Setting	Change Setting	Options	Range
AT?RT	AT!RTn	n	500..12000 (ms)

The local device will respond with a synchronous notification message.

Notifications View Setting	Description
<Retry Timeout>	The current value.
[*]<Retry Timeout>	The value will be applied when the device enters OFFLINE or INITIATION LISTEN.

Notifications Change Setting	Description
OK	The command is accepted and will be applied immediately.
[*]OK	The value will be applied when the device enters OFFLINE or INITIATION LISTEN.
ERROR OUT OF RANGE	The value is out of range.
ERROR WRONG FORMAT	The command contains syntax errors.

A typical example of AT?RT and AT!RTn application is listed below.

	Example AT?RT and AT!RTn
test data test data	Send burst data.
+++	Switch to Command Mode
OK	
AT?RT	Get the current Retry Timeout.
2500	
AT!RT1000	Set the Retry Timeout to 1000 ms.
[*]OK	The setting is deferred.
AT?RT	The new Retry Timeout setting is applied.
1000	
AT?RT2000	
ERROR WRONG FORMAT	
AT!RT12010	
ERROR OUT OF RANGE	
AT!RT450	
ERROR OUT OF RANGE	

4.6.16 AT?ZI and AT!ZIn: Idle Timeout

Idle Timeout defines the timeout before closing an idle acoustic connection.

The device closes an established acoustic connection if no data flow was detected during the Idle Timeout. (See section 2.5 for Data flow information). If no data flow was detected, the device closes the acoustic connection once Idle Timeout has expired. It then stands by for immediate connection initiated by the remote side.

Use AT!ZIn to define the Idle Timeout (in seconds).

View Setting	Change Setting	Options	Range
AT?ZI	AT!ZIn	n	0..3600 (s)

The local device will respond with a synchronous notification message.

Notifications View Setting	Description
<Idle Timeout>	The current value.

Notifications Change Setting	Description
OK	The command is accepted and will be applied immediately.
ERROR OUT OF RANGE	The value is out of range.
ERROR WRONG FORMAT	The command contains syntax errors.

A typical example of AT?ZI and AT!ZIn application is listed below.

	Example AT?ZI and AT!ZIn
test data test data	Send burst data.
+++	Switch to Command Mode
OK	
AT?ZI	Get the current Idle Timeout.
60	
AT?S	Get the Acoustic Connection Status.
ONLINE 16376	
AT!ZI75	Set the Idle Timeout to 75.
OK	
AT?ZI	The new Idle Timeout setting is applied.
75	
AT?ZI500	
ERROR WRONG FORMAT	

4.6.17 AT?ZS, AT?ZSL and AT!ZSn: Stream Number

Each of the device's I/O interfaces is associated with a particular data stream that has its unique number.

AT?ZS request returns the stream number, associated with the interface that is currently in use to access the device.

AT?ZSL requests the Interface List, where each row contains a stream number with the associated interface's Interface String (see 3.1).

The list order is fixed - the Interface Strings have fixed positions in the Interface List. Changing a stream number of the interface does not change its position in the Interface List.

Use AT!ZS to change the Stream Number, associated with the interface currently in use.

If the new value is currently assigned to another stream, stream numbers will swap.

NOTE: Transferring data between different data streams is impossible. To establish an acoustic connection the devices must operate within one data stream - communicating devices must have identical Stream Number values.

View Setting	Change Setting	Options	Range
AT?ZS AT?ZSL	AT!ZSn	n	0..7

The local device will respond with a synchronous notification message.

Notifications View Setting	Description
<Stream number>	The current value.
[*]<Stream number>	The value will be applied when the device enters OFFLINE or INITIATION LISTEN.
<Stream number> <Interface String>	The Interface List with associated stream numbers.

Notifications Change Setting	Description
OK	The command is accepted and will be applied immediately.
[*]OK	The value will be applied when the device enters OFFLINE or INITIATION LISTEN.
ERROR OUT OF RANGE	The value is out of range.
ERROR WRONG FORMAT	The command contains syntax errors.

A typical example of AT?ZS, AT?ZSL and AT!ZSn application is listed below.

	Example AT?ZS, AT?ZSL and AT!ZSn
+++	Switch to Command Mode
OK	
AT?ZS	Get the Stream Number of the interface in use.
0	The interface is associated with Stream Number 0.
AT?ZSL	Get the Interface List.
0 tcp://0.0.0.0:9210:lr:n|at -l "\n"	
1 tcp://0.0.0.0:9220:lr:n	
AT!ZS1	Set the current interface's Stream Number to 1.
OK	
AT?ZS	The current interface is now associated with
1	Stream Number 1.
AT?ZSL	Get the Interface List.
1 tcp://0.0.0.0:9210:lr:n|at -l "\n"	Stream Number values have swapped.
0 tcp://0.0.0.0:9220:lr:n	
AT!ZS5	Set the current interface's Stream Number to 5.
OK	
AT?ZS	The current interface is now associated with
5	Stream Number 5.
AT?ZSL	Get the Interface String.
5 tcp://0.0.0.0:9210:lr:n|at -l "\n"	
0 tcp://0.0.0.0:9220:lr:n	
AT!ZS8	
ERROR OUT OF RANGE	
AT?ZS5	
ERROR WRONG FORMAT	

4.6.18 `AT?ZL` and `AT!ZLn,m`: Pool Size

`Pool Size` defines the transmission buffer size (in bytes), associated with a particular data stream.

`AT?ZL` requests a space-separated list of buffer sizes. The list entries are not sorted by stream numbers, but match the positions of the interfaces in the `Interface List` (see 3.1). Use `AT?ZSL` to see the `Interface List` with interface strings and corresponding stream numbers.

Use `AT!ZLn,m` to change the buffer size, associated with an interface.

Here `n` is the current stream number of the interface, `m` is the new buffer size.

NOTE: The buffer to be modified must be empty! Use `ATZ4` to clear the transmission buffer by dropping unsent data and instant messages (see 4.5.2).

View Setting	Change Setting	Options	Range	
`AT?ZL`	`AT!ZLn,m`	`n`	0..7	Stream number
		`m`	16384..1048576	Pool size, B

The local device will respond with a synchronous notification message.

Notifications View Setting	Description
`<Pool Size>`	The current value.

Notifications Change Setting	Description
`OK`	The command is accepted and will be applied immediately.
`ERROR BUFFER IS NOT EMPTY`	The buffer is not empty and can not be modified.
`ERROR OUT OF RANGE`	The value is out of range.
`ERROR WRONG FORMAT`	The command contains syntax errors.

A typical example of `AT?ZL` and `AT?ZLn,m` application is listed below.

	Example AT?ZL and AT!ZLn,m
+++	Switch to Command Mode
OK	
AT?ZSL	Get the Interface List of the device.
0 tcp://0.0.0.0:9221:lr:n|at -l "\n"	
1 tcp://0.0.0.0:9221:lr:n	
AT!ZL1,16384	Set the Pool Size for Interface 9221 to 16384.
OK	
AT!ZS1	Set the current interface Stream number to 1.
OK	
AT?ZSL	Get the Interface List.
1 tcp://0.0.0.0:9211:lr:n|at -l "\n"	
0 tcp://0.0.0.0:9221:lr:n	
AT&W	Save settings to profile.
OK	
AT?ZL	Get the Pool Size.
20000 16384	
AT!ZL1,30000	Set the Pool Size for Stream Number 1 to 30000.
OK	
AT?ZL	Get the Pool Size.
30000 16384	
ATO	Switch to Data Mode.
test data test data	Send burst data.
+++ATC	Switch to Command Mode.
OK	
AT!ZL1,20000	Set Pool Size to 20000.
ERROR BUFFER IS NOT EMPTY	The buffer is not empty due to a pending data transmission.
AT!ZL1,1048577	
ERROR OUT OF RANGE	
AT!ZL1,16383	
ERROR OUT OF RANGE	
AT!ZL8,20000	
ERROR OUT OF RANGE	

4.6.19 `AT?ZD` and `AT!ZD`: Drop counter

Use this command to view and reset the dropped bytes counter.

The device drops unsent data from the transmission buffer:

- if it received a corresponding command (see 4.5.2);
- once the Idle Timeout has expired (see 4.6.16);
- if data transmission to a `Remote Address` 0 was attempted

The dropped data is counted for every data stream (in bytes).

`AT?ZD` requests a space-separated list of dropped bytes. The entries correspond to data streams. The list entries are not sorted by stream numbers, but match the fixed positions of the interfaces in the `Interface List` (see 3). Use `AT?ZSL` to see the `Interface List` with `Interface Strings` and corresponding `Stream Numbers`.

Use `AT!ZD` to reset the dropped bytes counter.

The local device will respond with a synchronous notification message.

Notifications View Setting	Description
`<Drop Counter>`	The current value.

Notifications Change Setting	Description
`OK`	The command is accepted and will be applied immediately.
`ERROR WRONG FORMAT`	The command contains syntax errors.

A typical example of `AT?ZD` and `AT!ZD` application is listed below.

	Example `AT?ZD` and `AT!ZD`
`test data test data`	Send burst data.
`+++`	Switch to Command Mode
`OK`	
`ATZ4`	Drop burst data and instant messages.
`OK`	
`AT?ZD`	Get the `Drop Counter` value.
`8 0`	
`AT?ZSL`	Get the `Interface List`.
`1 tcp://0.0.0.0:9211:lr:n|at -l "\n"`	
`0 tcp://0.0.0.0:9221:lr:n`	
`AT!ZD`	Reset the `Drop Counter`.
`OK`	
`AT?ZD`	
`0 0`	
`AT!ZD1`	
`ERROR WRONG FORMAT`	

4.6.20 AT?ZO and AT!ZO: Overflow Counter

The transmission buffer size is limited.

The acoustic channel is usually slower than the I/O interface. A buffer overflow can occur if host data is filling the transmission buffer faster than it can be delivered via the acoustic channel. If the buffer is full, any incoming bytes are lost.

The `Overflow Counter` tracks the bytes lost due to buffer overflow.

Use `AT?ZO` to request the current lost bytes count.

The lost data is counted for every data stream (in bytes).

`AT?ZO` requests a space-separated list of dropped bytes. The entries correspond to data streams.

The list entries are not sorted by stream numbers, but match the fixed positions of the interfaces in the `Interface List` (see 3.1). Use `AT?ZSL` to see the `Interface List` with `Interface Strings` and corresponding `Stream Numbers`.

Use `AT!ZO` to reset the `Overflow Counter`.

Buffer overflow can be avoided by implementing flow control. Track the free buffer space with the Acoustic Connection Status request `AT?S` (see section 4.6.2).

Notifications View Setting	Description
`<Overflow Counter>`	The current value.

Notifications Change Setting	Description
`OK`	The command is accepted and will be applied immediately.
`ERROR WRONG FORMAT`	The command contains syntax errors.

A typical example of `AT?ZO` and `AT!ZO` application is listed below.

	Example `AT?ZO` and `AT!ZO`
`+++`	Switch to Command Mode
`OK`	
`AT?ZO`	Get the `Overflow Counter` value.
`12 0`	
`AT?ZSL`	Get the `Interface List`.
`1 tcp://0.0.0.0:9211:lr:n|at -l "\n"`	
`0 tcp://0.0.0.0:9221:lr:n`	
`AT!ZO`	Reset the `Overflow Counter`.
`OK`	
`AT?ZO`	
`0 0`	
`AT!ZO2`	
`ERROR WRONG FORMAT`	

4.6.21 AT?UT and AT?UTn: System Time

System Time is the internal clock of the device.

A default System Timevalue is the number of seconds elapsed since the device has been powered on.

Use AT?UT to view the current System Time (in seconds).

Use AT!UTn to set another System Time value.

NOTE: System Time values can not be stored to a settings profile with AT&W (Store Settings Profile). A reset changes the System Time back to its default value - the number of seconds elapsed since the device has been powered on.

View Setting	Change Setting	Options	Range
AT?UT	AT!UTn	n	64 bit, unsigned long long

The local device will respond with a synchronous notification message.

Notifications View Setting	Description
<System Time>	The current value.

Notifications Change Setting	Description
OK	The command is accepted and will be applied immediately.
ERROR OUT OF RANGE	The value is out of range.
ERROR WRONG FORMAT	The command contains syntax errors.

A typical example of AT?UT and AT!UTn application is listed below.

	Example AT?UT and AT!UTn
+++	Switch to Command Mode
OK	
AT?UT	Get the current System Time.
6993	
AT!UT1	Set the System Time to 1.
OK	
AT?UT	Get the System Time.
3	The current System Time. 2 seconds have passed since it was set to 1.
AT&W	Save setting to profile.
OK	
ATZ	Reset the device.
OK	
AT?UT	Get System Time.
7020	The System Time was not saved to profile.
AT?UT3	
ERROR WRONG FORMAT	

4.6.22 AT?CA and AT?CAn: Sound Speed

Sound Speed defines the sound velocity value used to evaluate the distance to a remote device.

Distance estimation is the basis for calculating the position of a remote device (AT?UP and AT?UPX, see 4.9.1 and 4.9.2). The device's default Sound Speed value is 1500 m/s.

The actual speed of sound may take up a wide range of values that depend on water temperature, salinity and pressure. Use AT?CA to request or AT!CAn to set another Sound Speed value (in m/s).

View Setting	Change Setting	Options	Range
AT?CA	AT!CAn	n	1300..1700 (m/s)

The local device will respond with a synchronous notification message.

Notifications View Setting	Description
<Sound Speed>	The current value.
[*]<Sound Speed>	The value will be applied when the device enters OFFLINE or INITIATION LISTEN.

Notifications Change Setting	Description
OK	The command is accepted and will be applied immediately.
[*]OK	The value will be applied when the device enters OFFLINE or INITIATION LISTEN.
ERROR OUT OF RANGE	The value is out of range.
ERROR WRONG FORMAT	The command contains syntax errors.

A typical example of AT?CA and AT!CAn application is listed below.

	Example AT?CA and AT!CAn
test data test data	Send burst data.
+++	Switch to Command Mode
OK	
AT?CA	Get the current Sound Speed.
1500	
AT!CA1400	Set the Sound Speed to 1400 m/s.
[*]OK	The setting is deferred.
AT?CA	The new setting is applied.
1400	
AT?CA1400	
ERROR WRONG FORMAT	
AT!CA1800	
ERROR OUT OF RANGE	
AT!CA1299	
ERROR OUT OF RANGE	

4.6.23 `AT?RI` and `AT!RIn`: IM Retry Count

`IM Retry count` is the number of instant message delivery retries.

`IM Retry count` value defines, how many times will the device retry to deliver an instant message after a failure.

NOTE: set `IM Retry count` 255 for an unlimited number of instant message delivery retries. The device will then reattempt transmitting the instant message until it is delivered to the destination address.

View Setting	Change Setting	Options		Description
`AT?RI`	`AT!RIn`	`n`	0	The device will not reattempt delivering the IM.
			1..255	Number of IM delivery retries.

The local device will respond with a synchronous notification message.

Notifications View Setting	Description
`<IM Retry Count>`	The current value.

Notifications Change Setting	Description
`OK`	The command is accepted and will be applied immediately.
`ERROR OUT OF RANGE`	The value is out of range.
`ERROR WRONG FORMAT`	The command contains syntax errors.

A typical example of `AT?RI` and `AT!RIn` application is listed below.

	Example `AT?RI` and `AT!RIn`
`+++`	Switch to Command Mode
`OK`	
`AT?RI`	Get the current `IM Retry count`.
`200`	
`AT!RI1`	Set the `IM Retry count` to 1.
`OK`	
`AT?RI`	
`1`	
`AT?RI1`	
`ERROR WRONG FORMAT`	
`AT!RI256`	
`ERROR OUT OF RANGE`	

4.7 Wake Up Module

This section describes commands that have effect only on devices with the Wake Up Module installed.

The Wake Up Module helps optimizing power consumption for short– or long–term deployments by checking for incoming acoustic signals or incoming data on the host interface and turning the rest of the device on only when such a signal is detected. Once the device completes receiving or transmitting data, it switches itself off.

The Wake Up Module always reacts on incoming data on the host interface. To save energy, the Wake Up Module monitors the acoustic channel in an on/off toggle cycle. It detects incoming acoustic signals only when it is active, signals that arrive when the Wake Up Module is idle are not received.

Use the following commands to adjust the acoustic channel monitoring toggle cycle.

4.7.1 `AT?DA` and `AT!DAn`: Wake Up Active Time

`Wake Up Active Time` is the active interval of acoustic channel monitoring.

This setting defines the duration (in seconds) of an active interval, when the Wake Up Module monitors the acoustic channel for incoming signals.

NOTE: Duration of the active interval must be less than the total duration of the Wake Up cycle (the `Wake Up Period`, see section 4.7.2).

View Setting	Change Setting	Options	Range
`AT?DA`	`AT!DAn`	`n`	0..3600 (s)

The local device will respond with a synchronous notification message.

Notifications View Setting	Description
`<Wake Up Active Time>`	The current value.
`[*]<Wake Up Active Time>`	The value will be applied when the device enters `OFFLINE` or before a transmission.

Notifications Change Setting	Description
`OK`	The command is accepted and will be applied immediately.
`[*]OK`	The value will be applied when the device enters `OFFLINE` or before a transmission.
`ERROR OUT OF RANGE`	The value is out of range.
`ERROR WRONG FORMAT`	The command contains syntax errors.

A deferred `Wake Up Active Time` setting is automatically applied before a burst data or instant message transmission.

A typical example of `AT?DA` and `AT!DAn` application is listed below.

	Example `AT?DA` and `AT!DAn`
`+++`	Switch to Command Mode
`OK`	
`AT?S`	Requesting the acoustic connection status
`ONLINE 16384`	
`AT?DA`	Get the current `Wake Up Active Time`.
`10`	
`AT!DA15`	Set the `Wake Up Active Time` to 15 s.
`[*]OK`	The setting is deferred.
`ATH1`	Terminate the acoustic connection.
`AT?DA`	The new `Wake Up Active Time` setting is applied.
`15`	

4.7.2 AT?DT and AT!DTn: Wake Up Period

Wake Up Period is the period of the acoustic channel monitoring cycle.

The Wake Up Period value defines the total duration of an acoustic channel monitoring cycle that comprises an active interval and an idle interval.

Use this command to set the Wake Up Period (in seconds).

Use AT?DA and AT!DAn to view or change the duration of an active monitoring interval (see section 4.7.1).

View Setting	Change Setting	Options	Range
AT?DT	AT!DTn	n	0..3600 (s)

The local device will respond with a synchronous notification message.

Notifications View Setting	Description
<Wake Up Period>	The current value.
[*]<Wake Up Period>	The value will be applied when the device enters OFFLINE or before a transmission.

Notifications Change Setting	Description
OK	The command is accepted and will be applied immediately.
[*]OK	The value will be applied when the device enters OFFLINE or before a transmission.
ERROR OUT OF RANGE	The value is out of range.
ERROR WRONG FORMAT	The command contains syntax errors.

A deferred Wake Up Period setting is automatically applied before a burst data or instant message transmission.

A typical example of AT?DT and AT!DTn application is listed below.

	Example AT?DT and AT!DTn
+++	Switch to Command Mode
OK	
AT?S	Requesting the acoustic connection status
ONLINE 16384	
AT?DT	Get the current Wake Up Period.
9	
AT!DT10	Set the Wake Up Period to 10 s.
[*]OK	The setting is deferred.
ATH1	Terminate the acoustic connection.
AT?DT	The new Wake Up Period setting is applied.
10	

4.7.3 `AT?ZH and AT!ZHn`: Hold Timeout

Having completed data transmissions, the Wake Up Module–equipped device will stay powered for a `Hold Timeout` interval.

A device turns itself off once the `Hold Timeout` interval has expired.

Use `AT!ZHn` to define the duration (in seconds) of the `Hold Timeout` interval.

View Setting	Change Setting	Options	Range
`AT?ZH`	`AT!ZHn`	`n`	0..3600 (s)

The local device will respond with a synchronous notification message.

Notifications View Setting	Description
`<Hold Timeout>`	The current value.
`[*]<Hold Timeout>`	The value will be applied when the device enters `OFFLINE` or `INITIATION LISTEN`.

Notifications Change Setting	Description
`OK`	The command is accepted and will be applied immediately.
`[*]OK`	The value will be applied when the device enters `OFFLINE` or `INITIATION LISTEN`.
`ERROR OUT OF RANGE`	The value is out of range.
`ERROR WRONG FORMAT`	The command contains syntax errors.

A typical example of `AT?ZH` and `AT!ZHn` application is listed below.

	Example `AT?ZH` and `AT!ZHn`
`test data test data`	Send burst data.
`+++`	Switch to Command Mode
`OK`	
`AT?ZH`	Get the current `Hold Timeout`.
`60`	
`AT!ZH10`	Set the `Hold Timeout` to 10 s.
`[*]OK`	The setting is deferred.
`AT?ZH`	The new `Hold Timeout` setting is applied.
`10`	

4.8 Tracking: measuring the parameters of the acoustic link.

This section describes tracking communication parameters with AT commands.

Most communication parameters are measured upon incoming signal reception.

If no connection is established at the moment, the last measured values will be returned.

Initial parameter values after turning on or resetting the device are 0 as no prior data transfers occurred.

4.8.1 AT?BL: Local–to–remote bitrate

Communicating devices automatically adjust the bitrate during data transmissions to maintain the highest possible throughput values.

AT?BL requests the last transmission's raw bitrate[1]value in the local-to-remote direction.

AT?BL returns the total number of transferred bits per second, including both the useful data and the protocol overhead.

The device will respond with a synchronous message with the value requested.

View Value	Notification	Example	
AT?BL	<local-to-remote bitrate>	+++ OK AT?BL 8461 AT!BL ERROR WRONG FORMAT	Switch to Command Mode. Get the last measured value.

4.8.2 AT?BR: Remote–to–local bitrate

Communicating devices automatically adjust the bitrate during data transmissions to maintain the highest possible throughput values.

AT?BR requests the last transmission's raw bitrate value in the remote-to-local direction.

AT?BR returns total number of transferred bits per second, including both the useful data and the protocol overhead.

The device will respond with a synchronous message with the value requested.

View Value	Notification	Example	
AT?BR	<remote-to-local bitrate>	+++ OK AT?BR 8463 AT!BR ERROR WRONG FORMAT	Switch to Command Mode. Get the last measured value.

[1] http://en.wikipedia.org/wiki/Bit_rate

4.8.3 AT?E: RSSI

AT?E requests the RSSI (Received Signal Strength Indicator) value. RSSI indicates the received signal level in dB re 1 V and represents the relative received signal strength.

The device will respond with a synchronous message with the value requested. RSSI is a signed floating point number. Higher RSSI values correspond to stronger signals.

View Value	Notification	Example	
AT?E	<RSSI>	+++	Switch to Command Mode.
		OK	
		AT?E	Get the last measured value.
		-56	
		AT!E	
		ERROR WRONG FORMAT	

4.8.4 AT?I: Signal Integrity Level

AT?I requests the Signal Integrity value that illustrates distortion of the last received acoustic signal. It is calculated based on cross-correlation measurements.

Higher Signal Integrity Level values correspond to less distorted signals. An acoustic link is considered weak if the Signal Integrity Level value is less than 100.

The device will respond with a synchronous message with the value requested.

View Value	Notification	Example	
AT?I	<Signal Integrity Level>	+++	Switch to Command Mode.
		OK	
		AT?I	Get the last measured value.
		145	
		AT!I	
		ERROR WRONG FORMAT	

4.8.5 AT?T: Propagation Time

AT?T requests the acoustic signal's propagation time between communicating devices (in microseconds).

The propagation delay is measured during point-to-point communication or upon instant message acknowledgement reception.

The device will respond with a synchronous message with the value requested.

View Value	Notification	Example	
AT?T	<Propagation Time>	+++	Switch to Command Mode.
		OK	
		AT?T	Get the last measured value.
		323586	
		AT!T	
		ERROR WRONG FORMAT	

4.8.6 AT?V: Relative Velocity

AT?V requests the relative velocity between communicating devices (in m/s).

The device will respond with a synchronous message with the value requested.

Relative velocity is a signed floating point number.

View Value	Notification	Example	
AT?V	<Relative velocity>	+++	Switch to Command Mode.
		OK	
		AT?V	Get the last measured value.
		0.0072	
		AT!V	
		ERROR WRONG FORMAT	

4.8.7 AT?P: Multipath Structure

AT?P returns a table illustrating the structure of the acoustic signal's multipath propagation.

The first 8 registered signals are taken into account.

The left column corresponds to the timeline (in us), the right column contains the corresponding signal integrity values of the multipath components (see section 4.8.4).

The device will respond with a synchronous message with the value requested.

View Value	Notification	Example	
AT?P	<Multipath Structure>	+++	Switch to Command Mode.
		OK	
		AT?P	Get the last measured value.
		28 146	
		448 156	
		580 123	
		968 184	
		1380 142	
		0 0	
		0 0	
		0 0	
		AT!P	
		ERROR WRONG FORMAT	

4.9 Positioning: tracking positioning data

This section describes tracking the position of a remote device with AT commands.

The following commands have effect only on S2C USBL (Ultra-short baseline) series devices that provide 3D positioning simultaneously with data transmissions.

4.9.1 AT?UP: Positioning

AT?UP estimates the position of the remote target in the local coordinate system of the USBL-series device[2]. The local device will respond with a synchronous message.

AT?UP returns:

```
<seconds>,<remote address>,<X>,<Y>,<Z>
```

here <seconds> indicates the System Time of the measurement, <X>,<Y>,<Z> (in meters) are coordinates of the target - a remote device with address <remote address>.

See section 4.6.21 for more information about the system time of the device. See section 6 for the local coordinate reference frame.

Detailed parameter descriptions are listed in the table below.

	Parameter Description
<seconds>	Time of the measurement, corresponds to the local device's System Time(s).
<remote address>	The target's network address.
<X>,<Y>,<Z>	Coordinates (m), floating point.

The positioning values are calculated when both the local device and the target are either in ONLINE or INITIATION LISTEN.

When in ONLINE, positioning values are refreshed during point-to-point data exchange between the local device and the target.

When in INITIATION LISTEN, positioning values are refreshed upon reception of instant message delivery acknowledgments during instant message exchange.

You can send an instant message to the remote device to track its position without establishing an acoustic link.

An example of AT?UP is listed below.

	Example AT?UP
+++	Switch to Command Mode
OK	
AT*SENDIM,4,12,ack,test	Send an instant message to address 12.
OK	
DELIVEREDIM,12	Instant message delivery acknowledged.
AT?UP	Get the position of the device with address 12.
3246,12,-1.45,4.24,26.40	

[2]see section 6

4.9.2 AT?UPX: Motion-Compensated Positioning

This command has effect only on USBL-series devices with an AHRS (Attitude and Heading Reference System) sensor installed.

AT?UPX estimates the position of the remote target in the local coordinate system of the USBL-series device with roll, pitch and heading compensation.

Estimated coordinates of the remote device do not depend on the orientation of the local reference frame (see section 6 for the local coordinate reference frame).

A magnetic field mapping procedure is to be performed to ensure correct heading compensation. See Magnetic Mapper Guide for more information.

AT?UPX returns:

```
<seconds>,<remote address>,<E>,<N>,<U>
```

here <seconds> indicates the System Time of the measurement, <E>,<N>,<U> are coordinates (in meters) of a remote device with address <remote address>.

<E>,<N>,<U> are the East, North, Up (ENU) coordinates[3]. East, North, Up are directions of the object-based right-handed reference frame.

See section 4.6.21 for more information about the system time of the device.

Detailed parameter descriptions are listed in the table below.

	Parameter Description
<seconds>	Time of the measurement, corresponds to the local device's System Time(s).
<remote address>	The target's network address.
<E>,<N>,<U>	Coordinates (m), floating point.

The positioning values are calculated when both the local device and the target are either in ONLINE or INITIATION LISTEN.

When in ONLINE, positioning values are refreshed during point-to-point data exchange between the local device and the target.

When in INITIATION LISTEN, positioning values are refreshed upon reception of instant message delivery acknowledgments during instant message exchange.

You can send an instant message to the remote device to track its position without establishing an acoustic link.

An example of AT?UPX is listed below.

	Example AT?UPX
+++	Switch to Command Mode
OK	
AT*SENDIM,4,12,ack,test	Send an instant message to address 12.
OK	
DELIVEREDIM,12	Instant message delivery acknowledged.
AT?UPX	Get the position of the device with address 12.
14556,12,1.02,-5.76,-10.30	

[3] http://en.wikipedia.org/wiki/East_North_Up

5 Appendix I

5.1 S2C Acoustic Modem Configuration Utility

S2C device settings can be changed with a web-based Configuration Utility.

via link `http://<modem_ip>/` in the browser on the PC connected to the modem with Ethernet interface.

The PC and the modem must be in the same subnetwork. By default modem has 255.255.255.0 netmask in 192.168.0.0 network.

Important: **To make the changes actual the modem should be reset.**

Step-by-step guide to access the configuration utility:

- Connect modem to your LAN with Ethernet patch cable or connect modem to any computer directly with Ethernet cross-over cable.
- Computer must be configured to the same subnet, as the modem. Check the possibility to access the modem using ping command.
- Start your Internet browser and access main page of the configuration utility via link `http://<modem_ip>/`. On success on the main page of the configuration utility a menu with links to the following pages should appear:
  - Network Parameters
  - Data-Link Parameters
  - Hayes Mode Parameters

  The particular parameters of these configuration pages are described in the sections below.

Figure 2: S2C Acoustic Modem Configurator

5.1.1 Network Parameters

Step-by-step guide to change modem network configuration:

- Access the main page of the configuration utility as described in the section above.
- Choose link "Network Parameters" from the main page.

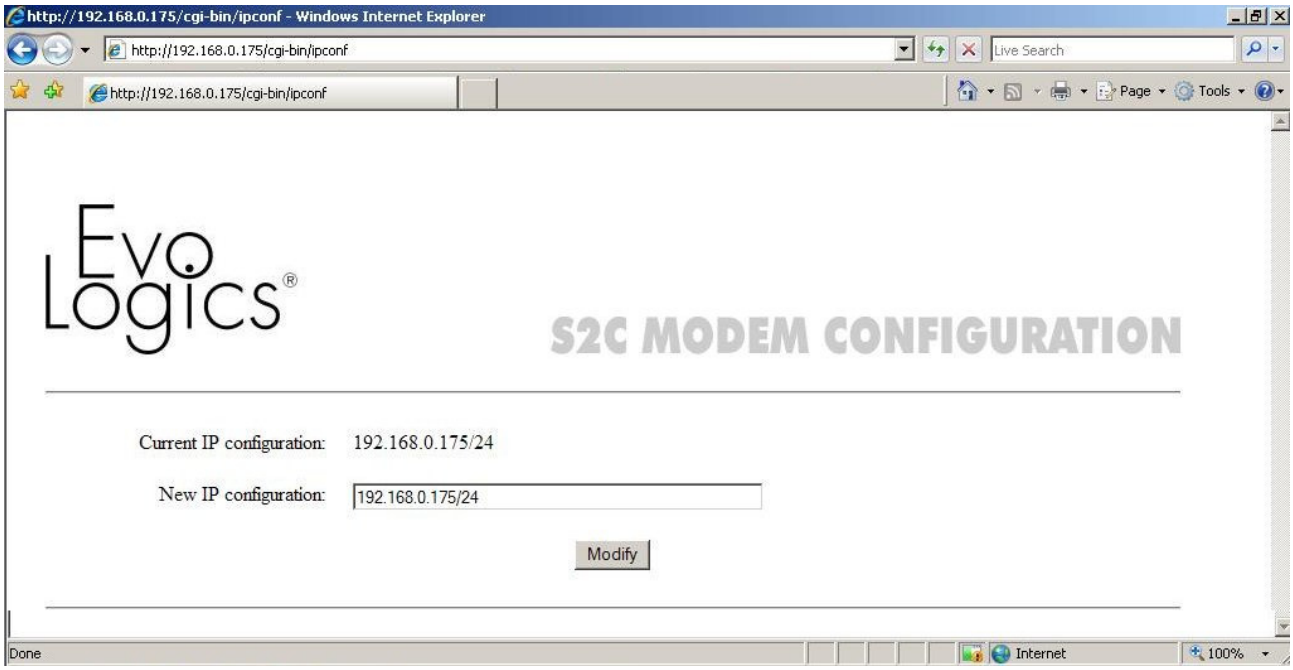

Figure 3: Change IP in S2C Acoustic Modem Configurator

- Change network configuration parameters using the following format:

  `<IP>/<number of bits in subnet mask>`

- Press Modify button. On success you will get a message `STATUS:Successfully changed.` The modified parameters will be applied after reboot of the modem. If you entered parameters in a wrong format, you will get appropriate error message. In this case repeat again from the previous step.
- Reboot your modem. Reconfigure the computer to the new subnet parameters (if necessary) and check the possibility to access the modem using ping command.

Table 1: Network Parameters

Configuration parameter name	*Example*
Current IP configuration	192.168.0.166/24
New IP configuration	192.168.0.166/24

5.1.2 Data-Link Parameters

Step-by-step guide to change parameters specific for Data-Link layer of the modem

- Access the main page of the configuration utility.
- Choose link "Data-Link Parameters" from the main page.
- Modify Data-Link Parameters. See Table 2 for parameter description.
- Press Apply button. On success you will get a message `STATUS:Successfully changed.` The modified parameters will be applied after reboot of the modem. If you entered parameters in a wrong format, you will get appropriate error message. In this case repeat again from the previous step.
- Reboot your modem.

Table 2: Data-Link Parameters Description

Name	*Range*	*Description*
Cluster Size	1..31	number of packets to be sent before acknowledgements
Streams Number	1..8	number of streams
Packet Time	50..1000	maximum number of bytes in the packet
Retrain Count	1..50	number of retries to reestablish connection
Retrain Timeout	500.12000	time to wait remote modem response, milliseconds
Local Address	1..14	the address of the current modem
Remote Address	0..14	Default Remote Address value
Carrier Waveform ID	0..1	This value must differ from its one on the remote side
Source Level	0..3	0 corresponds to highest source level, 3 - to lowest
Gain Control	normal, low	gain of the input amplifier, use low value for short distances (several meters)

Table 3: Data-Link Parameters

Parameter name	*Example*
Cluster Size	10
Streams Number	2
Packet Time	750
Retrain Count	10
Retrain Timeout, ms	3000
Local Address	1
Remote Address	2
Carrier Waveform ID	0
Source Level	0
Gain Control	*normal*

5.1.3 Hayes Mode Parameters

Step-by-step guide to change parameters specific for Hayes Mode

- Access the main page of the configuration utility.
- Choose link "Hayes Mode Parameters" from the main page.
- Modify Hayes Mode Parameters. See Table 4 for parameter description.
- Press Apply button. On success you will get a message `STATUS:Successfully changed.` The modified parameters will be applied after reboot of the modem. If you entered parameters in a wrong format, you will get appropriate error message. In this case repeat again from the previous step.
- Reboot your modem.

Table 4: Hayes Mode Parameters Description

Name	*Range*	*Description*
Command mode ESC sequence	string	Defines Guard Time Escape Sequence to switch to Command Mode: `+++` for RS232 and `+++\n` for TCP/IP
Stream Interfaces	string array[4]	Defines output interfaces for host-modem communication for every output stream with appropriate id
Operation regimes	manual, active or passive	The operation regimes

Table 5: Hayes Mode Parameters

Parameter name	*Example*
Command mode ESC sequence	$+++$
External interface connections	$0\ serial:///dev/ttyS1:B19200\|at$ $1\ tcp://192.168.0.166:9201:lr$
Modem operation mode	*active*

5.1.4 Interface String Format

Interface String defines the type of the interface (RS232 or Ethernet), and particular interface parameters (depending of the interface type), data compression and Command Mode association.

Interface string for RS232 interface type:
`serial:///dev/ttyS1:B<bitrate>[|at][|zlib]`
Interface string for Ethernet interface type:
`tcp://<ip>:<port>:lr[|at][|zlib]`
The suffixes in braces are optional.

[4]See Section 5.1.4

Examples:
`serial:///dev/ttyS1:B19200|at|zlib` `tcp://0.0.0.0:9200:lr|zlib`
Array of interfaces has the following format
`<n1> <interface string1> <n2> <interface string2>`
where `n1` and `n2` are numbers of stream associated with corresponding interface string.
Examples:
`0 serial:///dev/ttyS1:B19200|at|zlib`
`1 tcp://0.0.0.0:9200:lr|zlib`

6 Appendix II

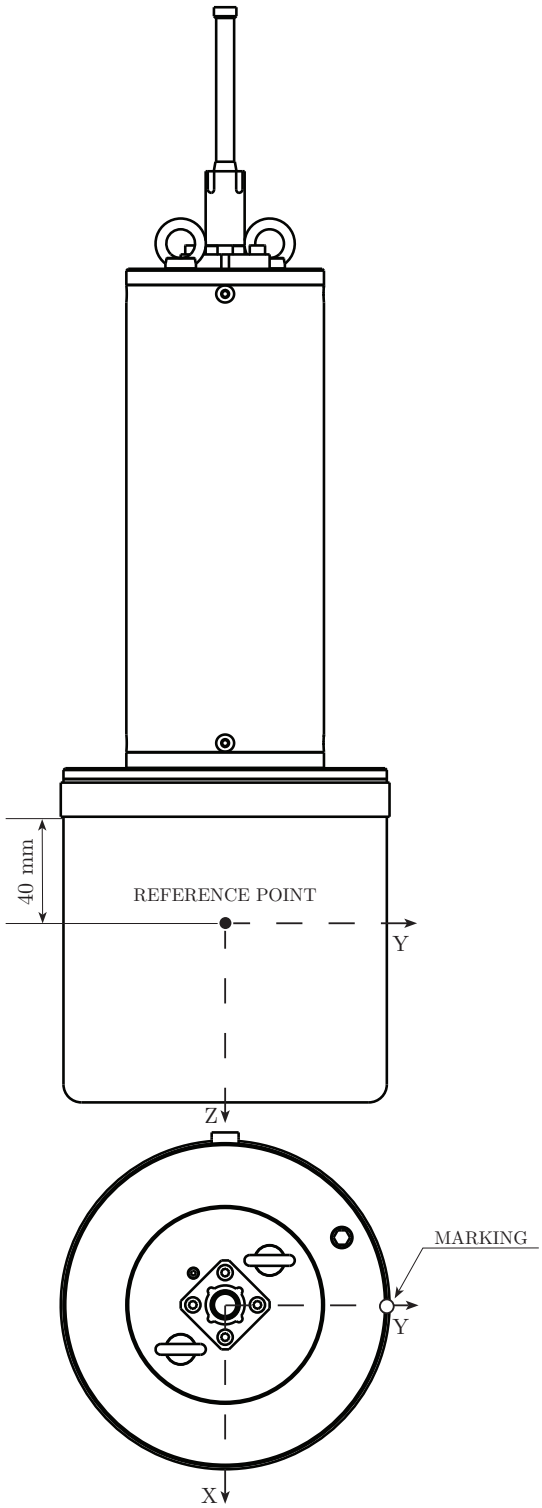

Figure 4: Local coordinate system of the device