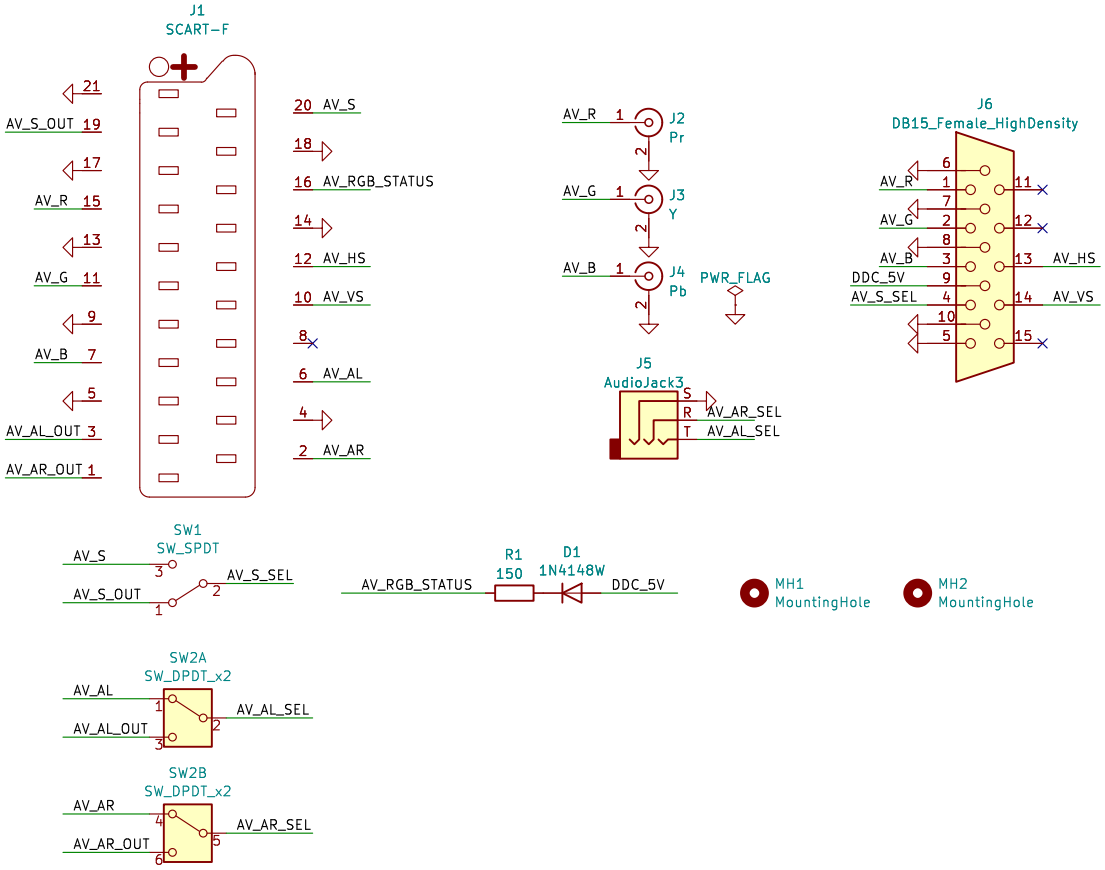

Sheet: /
File: dexx_video_adapter.kicad_sch

Title: AV adapter

Size: A4	Date: 2024-02-02	**Rev: 1.2**
KiCad E.D.A. kicad 7.0.11+dfsg-1		Id: 1/1