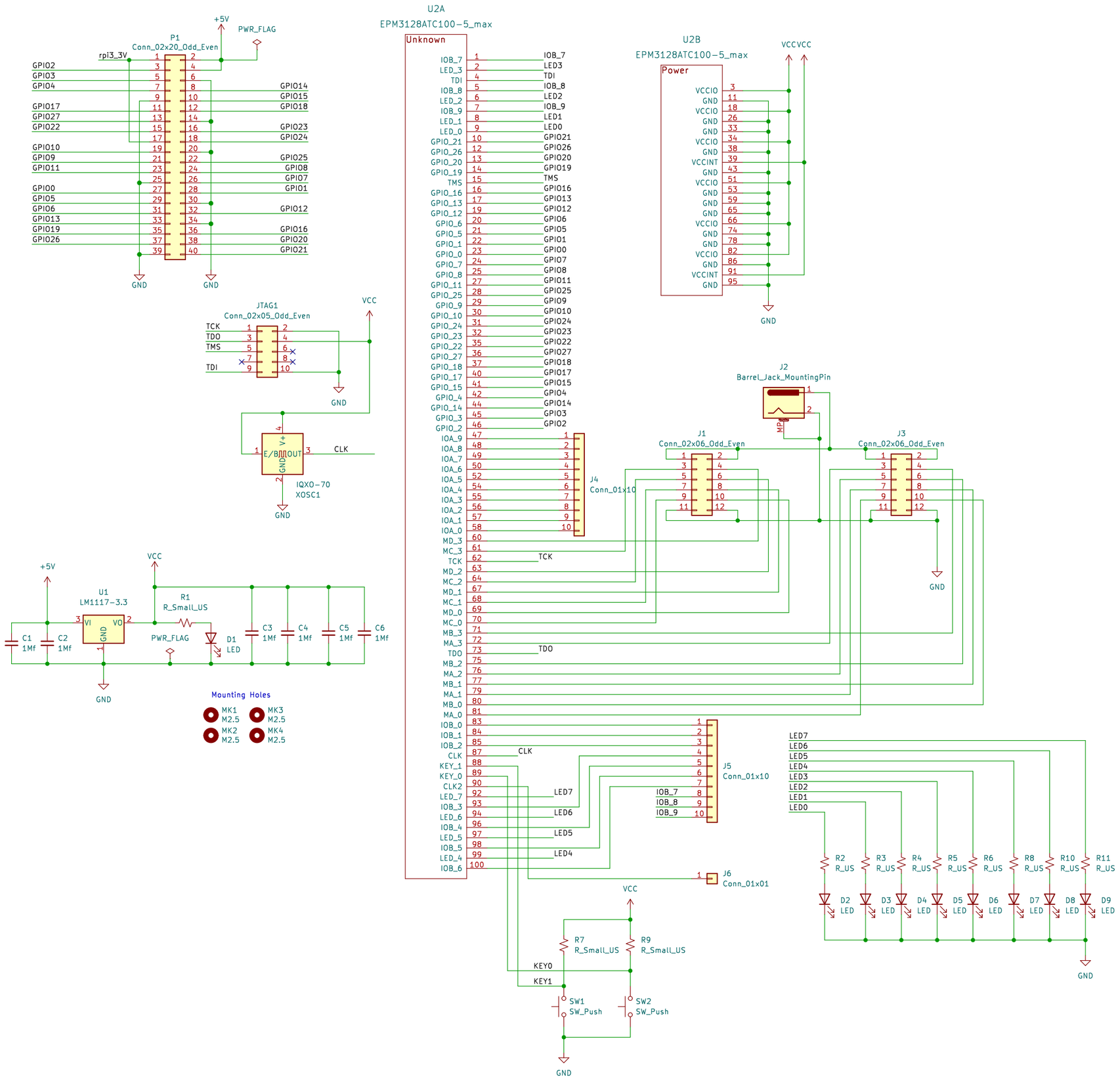
U2A
EPM3128ATC100-5_max
Unknown
U2B
EPM3128ATC100-5_max
Power
VCCVCC
P1
Conn_02x20_Odd_Even
rpi3_3V
+5V
PWR_FLAG
GPIO2
GPIO3
GPIO4
GPIO17
GPIO27
GPIO22
GPIO10
GPIO9
GPIO11
GPIO0
GPIO5
GPIO6
GPIO13
GPIO19
GPIO26
GPIO14
GPIO15
GPIO18
GPIO23
GPIO24
GPIO25
GPIO8
GPIO7
GPIO1
GPIO12
GPIO16
GPIO20
GPIO21
GND
JTAG1
Conn_02x05_Odd_Even
TCK
TDO
TMS
TDI
VCC
E/B
OUT
V+
GND
CLK
IQXO-70
XOSC1
J2
Barrel_Jack_MountingPin
MP
J1
Conn_02x06_Odd_Even
J3
Conn_02x06_Odd_Even
J4
Conn_01x10
J5
Conn_01x10
J6
Conn_01x01
U1
LM1117-3.3
VI
VO
C1
1Mf
C2
1Mf
R1
R_Small_US
D1
LED
C3
1Mf
C4
1Mf
C5
1Mf
C6
1Mf
Mounting Holes
MK1
M2.5
MK2
M2.5
MK3
M2.5
MK4
M2.5
LED7
LED6
LED5
LED4
LED3
LED2
LED1
LED0
R2
R_US
R3
R_US
R4
R_US
R5
R_US
R6
R_US
R8
R_US
R10
R_US
R11
R_US
D2
LED
D3
LED
D4
LED
D5
LED
D6
LED
D7
LED
D8
LED
D9
LED
R7
R_Small_US
R9
R_Small_US
KEY0
KEY1
SW1
SW_Push
SW2
SW_Push