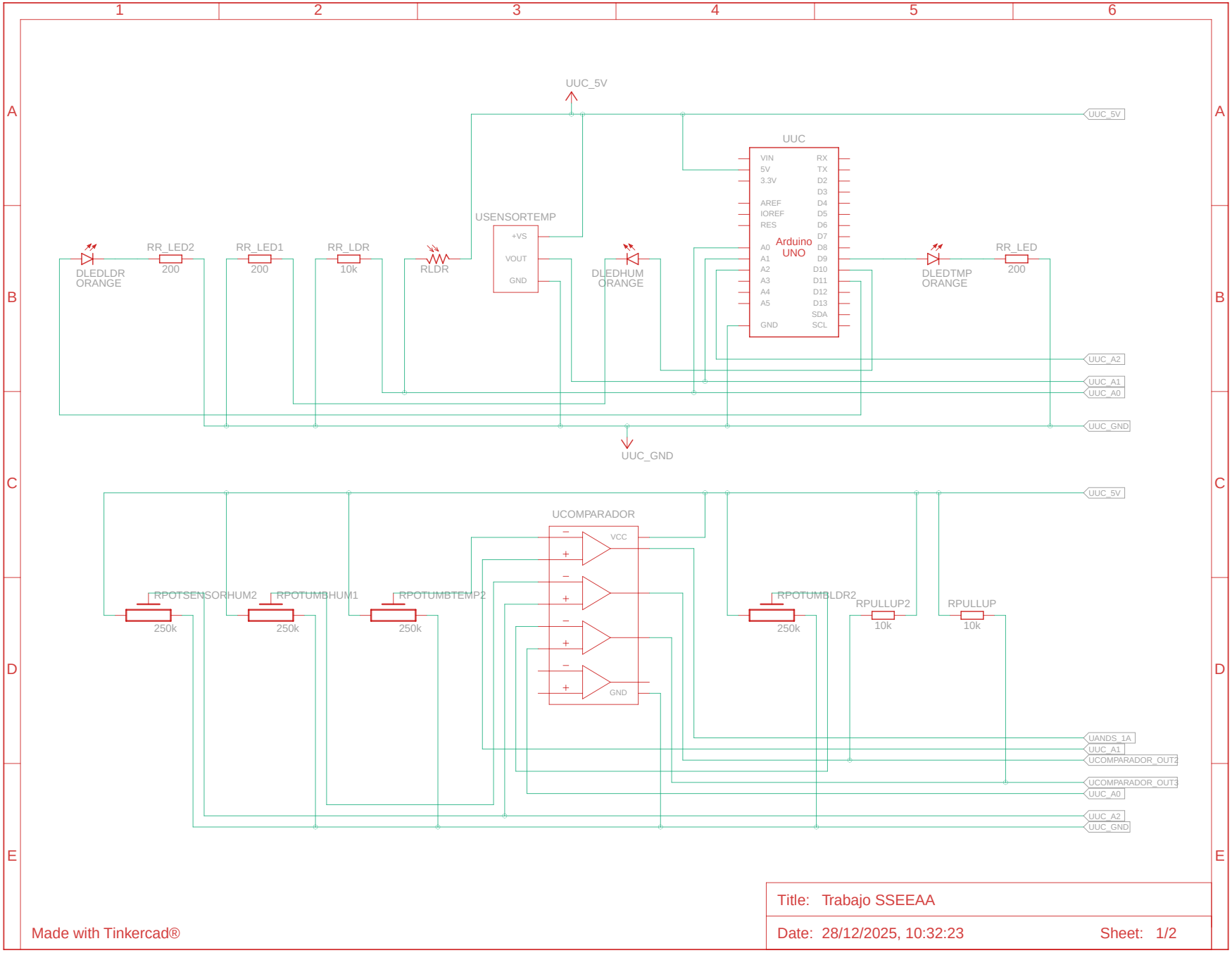

Made with Tinkercad®

Title: Trabajo SSEEAA

Date: 28/12/2025, 10:32:23

Sheet: 1/2

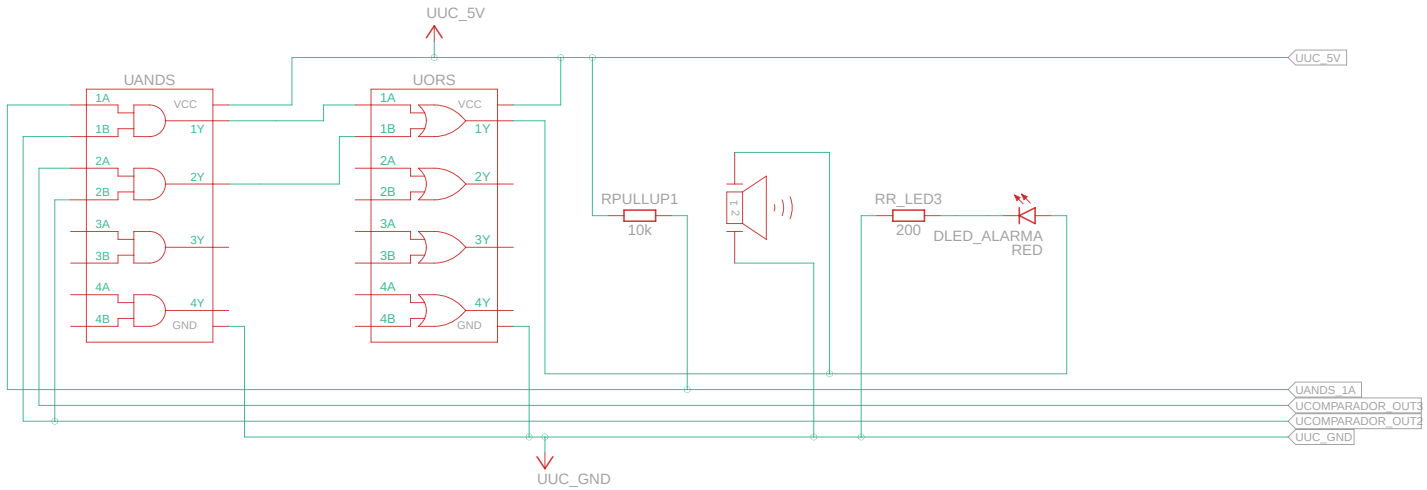

Made with Tinkercad®

Title: Trabajo SSEEAA

Date: 28/12/2025, 10:32:23

Sheet: 2/2