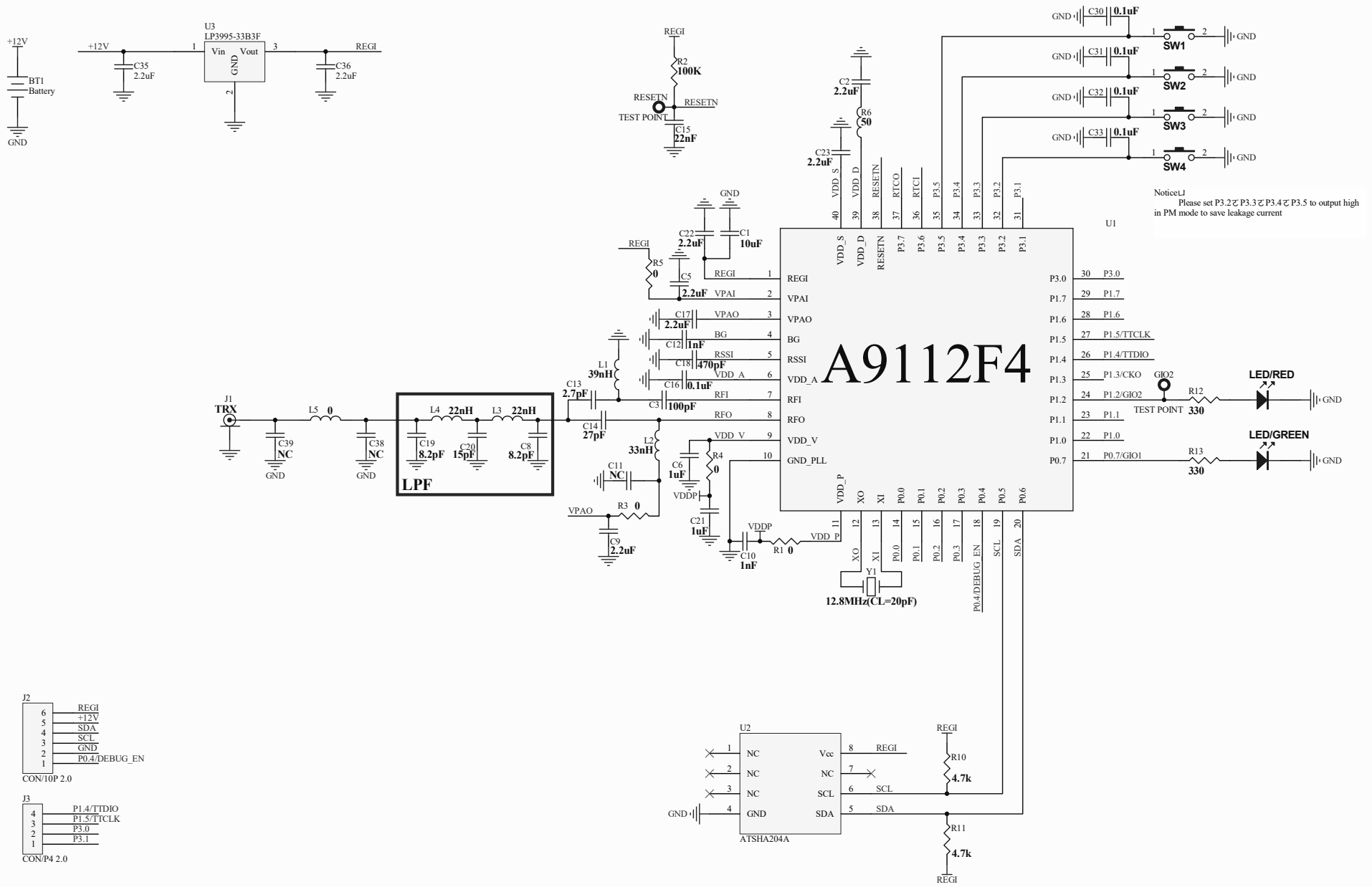

Title		
Size A3	Number	Revision
Date: 2018/3/1	Sheet of	
File: D:\Pmaster\..\Pmaster-A9112-remote_1.SchDoc	Drawn By:	