User Manual

# CL86Y(V20)

## Pulse type close loop stepper driver instruction manual

Version：V2.0

©2025 All Rights Reserved

Address: 15-4, #799 Hushan Road, Jiangning, Nanjing, China
Tel: 0086-2587156578
Web: www.omc-stepperonline.com
Sales: sales@stepperonline.com
Support: technical@stepperonline.com

# Catalogue

Revision history ..... 1
Introduction ..... 2
Chapter 1 Overview ..... 3
1.1 Product introduction ..... 3
1.2 Application field ..... 4
Chapter 2 Performance Indicators ..... 5
2.1 Electrical characteristic ..... 5
2.2 Using environment ..... 5
Chapter 3 Installation ..... 6
3.1 Mounting dimension ..... 6
3.2 Installation Methods ..... 6
Chapter 4 Driver Ports and Wiring ..... 7
4.1 Wiring diagram ..... 7
4.2 Port Definition ..... 8
4.2.1 Status indicator light ..... 8
4.2.2 Drive dip Settings ..... 8
4.2.3 Power input and motor port ..... 9
4.2.4 Power input and motor port ..... 9
4.2.5 Encoder input port ..... 9
4.3 Input/output port operation ..... 10
4.3.1 Input signal ..... 10
4.3.2 Output signal ..... 11
4.4 Signal input timing diagram ..... 11
Chapter 5 Driver Status Indicators ..... 12
Chapter 6 General Troubleshooting methods ..... 13

# Revision history

| Version | Description | Date | Remark |
|---|---|---|---|
| V1.0 | First edition release | 2025.05.30 | |
| | | | |
| | | | |
| | | | |
| | | | |

# Introduction

Thank you for using this stepper drive.

Before using this product, be sure to read this manual carefully to understand the necessary safety information, precautions, and operation methods.

The wrong operation can lead to extremely serious consequences.

# Statement

The design and manufacture of this product does not have the ability to protect personal safety from the threat of mechanical systems. Users are requested to consider safety protection measures during the design and manufacture of mechanical systems to prevent accidents caused by improper operation or abnormal products.

Due to product improvements, the contents of the manual are subject to change without notice.

Our company will not be responsible for any modification of the product by the user.

When reading, please note the following marks in the manual:

Remind you to pay attention to the main points in the text.

Indicates that improper operations may result in personal injury or equipment damage.

# Chapter 1 Overview

## 1.1 Product introduction

CL86Y(V20) adopts a new generation of 32-bit DSP control technology and power Angle control technology, the maximum speed can reach 3000rpm,And the high-speed torque attenuation is far lower than that of the ordinary open-loop driver, which can greatly improve the high-speed performance and torque of the stepper motor,It can effectively reduce the heating and vibration of the motor, thus improving the processing efficiency and accuracy of the machine.The driver adopts load-based current control technology, which can effectively reduce motor heat and prolong motor service life.The built-in position and alarm output signals of the driver are convenient for the upper computer to monitor and control. Position out of tolerance alarm function guarantee.

- The current size is intelligently adjusted according to the load condition
- Can drive 24/34 series stepper motor
- The optocoupler isolates the differential signal input
- The impulse response frequency is up to 200KHz
- Voltage input range: AC20-80V/DC30-110V
- With over current, over voltage, under voltage, position over error protection

## 1.2 Application field

This product is suitable for a variety of large automation equipment and instrument applications. For example: engraving machine, special industrial sewing machine, stripping machine, marking machine, cutting machine, laser phototypesetting, plotter, CNC machine tools and other automation equipment and instruments.

# Chapter 2 Performance Indicators

## 2.1 Electrical characteristic

| Argument | CL86Y(V20) | | | |
|---|---|---|---|---|
| | Minimum value | Typical value | Maximum value | Unit |
| Continuous output current | 0.6 | - | 6.0 | A |
| Input supply voltage | 20.0 | - | 80.0 | Vdc |
| Logic input current | 7.0 | - | 20.0 | mA |
| Pulse frequency | - | - | 200 | kHz |
| Insulation resistance | 500 | - | - | MΩ |

## 2.2 Using environment

| Cooling mode | Natural cooling | |
|---|---|---|
| Use environment | Use occasion | Try to stay away from other heating equipment, avoid dust, oil mist, corrosive gas, strong vibration places, flammable gas and conductive dust are prohibited |
| | Temperature | 0℃~50℃ |
| | Humidity | 40-90%RH (non-condensation) |
| | Vibration | 10~55Hz/0.15mm |
| Storage temperature | -20℃~+70℃ | |

# Chapter 3 Installation

## 3.1 Mounting dimension

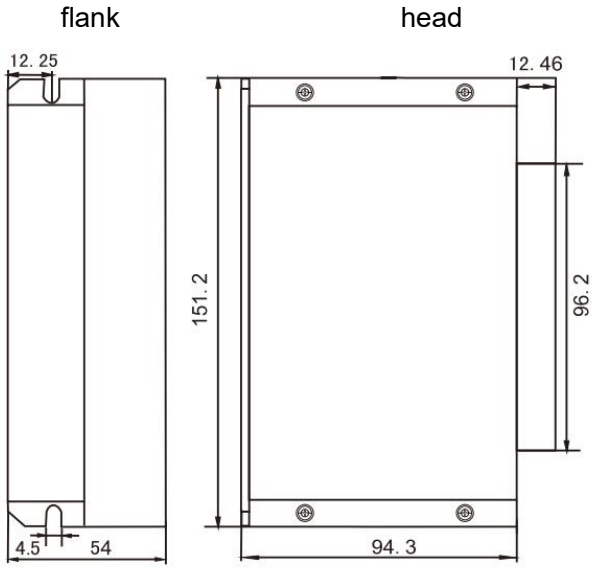


**Installation size drawing（unit：mm）**

## 3.2 Installation Methods

When installing the driver, please use the upright side installation to form strong air convection on the driver surface; If necessary, install a fan close to the driver to force the heat to dissipate to ensure that the driver works within the reliable operating temperature range (the reliable operating temperature of the driver is usually within 50°C, and the operating temperature of the motor is within 80°C).

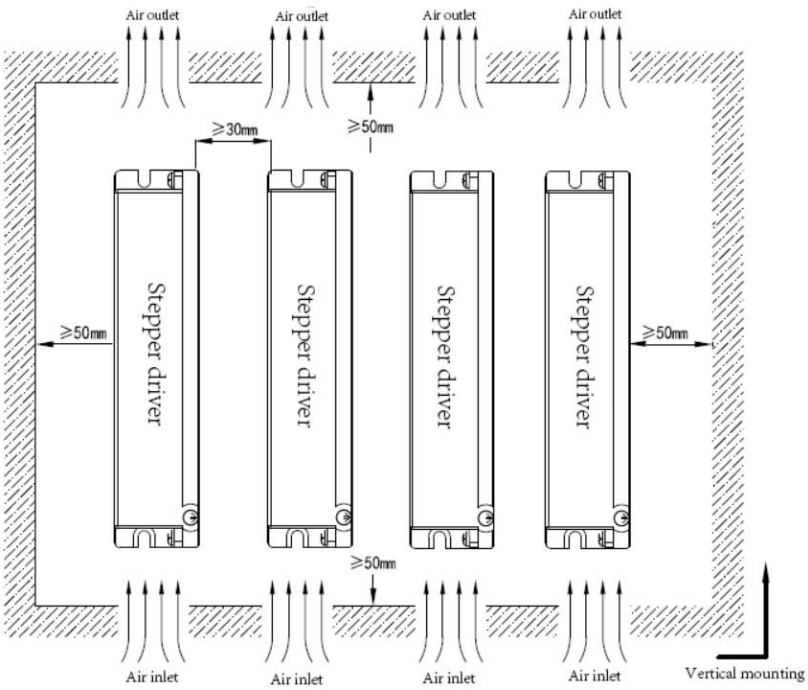

# Chapter 4 Driver Ports and Wiring

## 4.1 Wiring diagram

Use the CL86Y(V20) drive according to the interface diagram:

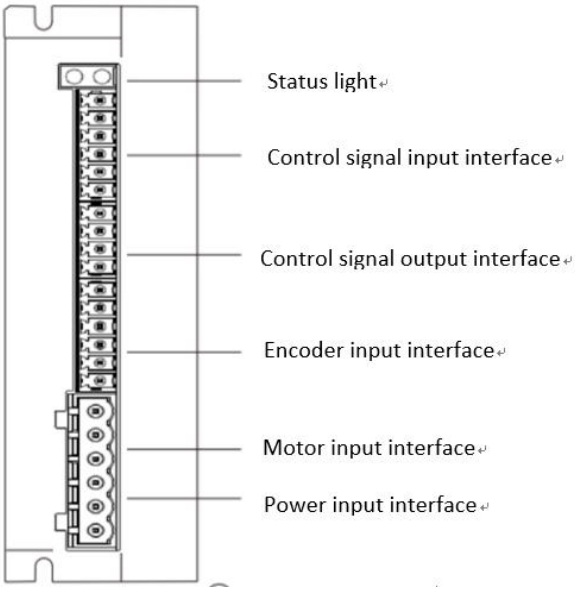


**Schematic diagram of the side wiring of the driver**

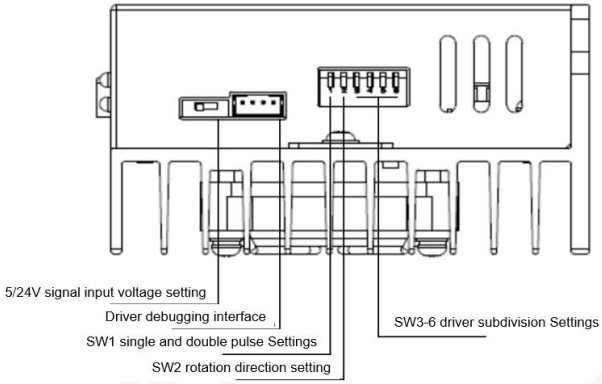


**Schematic diagram of the top wiring of the drive**

**Attention!**

- The personnel involved in wiring must have professional ability.
- No live wiring.
- The wiring can only be carried out after the installation is firm.
- Do not connect the power supply wrong, the input voltage should not exceed 80VAC/110VDC.

## 4.2 Port Definition

### 4.2.1 Status indicator light

| Color | Name | Features |
|---|---|---|
| Green | Power indicator light | When the power is on, the green indicator lights up. |
| Red | Fault indicator light | Drive overcurrent: flash once<br>Drive overvoltage: flicker twice<br>Drive undervoltage: flicker three times<br>Drive phase error: flicker four times<br>Drive overtolerance: flicker five times<br>Drive encoder error: flicker six times |

### 4.2.2 Drive dip Settings

SW1-SW2 is the basic function setting of the driver. Single and double pulse and rotation direction can be set respectively, as shown in the following table

| Serial number | Dip code | Function | Dip status | Set content |
|---|---|---|---|---|
| 1 | SW1 | Single and double pulse Settings | ON | CW&CCW |
| | | | OFF | PU&DR |
| 2 | SW2 | Motor rotation direction setting | ON | CCW |
| | | | OFF | CW |

SW3-SW6 can set the drive subdivision, four dip switches a total of 16 gear, respectively set 400-51200 a total of 16 file subdivision, as shown in the following table:

| DIP | Default (400) | 800 | 1600 | 3200 | 6400 | 12800 | 25600 | 51200 | 1000 | 2000 | 4000 | 5000 | 8000 | 10000 | 20000 | 40000 |
|---|---|---|---|---|---|---|---|---|---|---|---|---|---|---|---|---|
| SW3 | ON | OFF | ON | OFF | ON | OFF | ON | OFF | ON | OFF | ON | OFF | ON | OFF | ON | OFF |
| SW4 | ON | ON | OFF | OFF | ON | ON | OFF | OFF | ON | ON | OFF | OFF | ON | ON | OFF | OFF |
| SW5 | ON | ON | ON | ON | OFF | OFF | OFF | OFF | ON | ON | ON | ON | OFF | OFF | OFF | OFF |
| SW6 | ON | ON | ON | ON | ON | ON | ON | ON | OFF | OFF | OFF | OFF | OFF | OFF | OFF | OFF |

### 4.2.3 Power input and motor port

| Port | Lead | Symbol | Feature | Annotation |
|---|---|---|---|---|
| 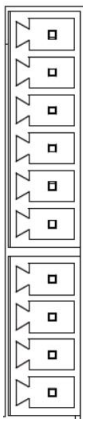 | 1 | PU+ | Pulse signal input positive end | Digital input and output signals, +5V-+24V can be driven (higher than 5V need to be connected to the current limiting resistance), support a common negative and positive connection |
| | 2 | PU- | Pulse signal input negative end | |
| | 3 | DR+ | Direction signal input positive end | |
| | 4 | DR- | Direction signal input negative end | |
| | 5 | MF+ | Enable the positive end of the signal input | Effectively (low level) turn off the motor coil current, the motor is in the free state and the alarm signal is cleared |
| | 6 | MF- | Enable the negative end of the signal input | |
| | 7 | PEND+ | Position signal output positive end | When the driver completes the given pulse, the position signal is effective (output optocoupler conduction). |
| | 8 | PEND- | Position signal output negative end | |
| | 9 | ALM+ | Alarm signal output positive end | Over current, over voltage, under voltage or out of the alarm, the alarm signal is valid |
| | 10 | ALM- | Alarm signal output negative end | |

### 4.2.4 Power input and motor port

| Port | Lead | Symbol | Name | Function |
|---|---|---|---|---|
| 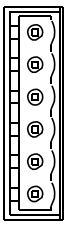 | 1 | A+ | Motor interface | Two phase stepper motor connector |
| | 2 | A- | | |
| | 3 | B+ | | |
| | 4 | B- | | |
| | 5 | ~AC | Power interface | VAC20-80V<br>VDC30-110V |
| | 6 | ~AC | | |

### 4.2.5 Encoder input port

| | Lead | Symbol | Name | Function |
|---|---|---|---|---|
| | 1 | EB+ | Encoder B phase input positive/negative end | Encoder B channel positive input/negative input |
| | 2 | EB- | | |
| | 3 | EA+ | Encoder phase A input positive/negative end | Encoder A channel positive input/negative input |
| | 4 | EA- | | |
| | 5 | VCC | Encoder power supply | Encoder 5V power supply |
| | 6 | EGND | Encoelectrically | Encoelectrically |

## 4.3 Input/output port operation

The CL86Y(V20) driver has three digital inputs, photoelectric isolation, and the signal supports 5V-24V input. When the input signal is higher than 24V, the series current limiting resistance is required at the signal input end. The specific wiring diagram is as follows:

### 4.3.1 Input signal

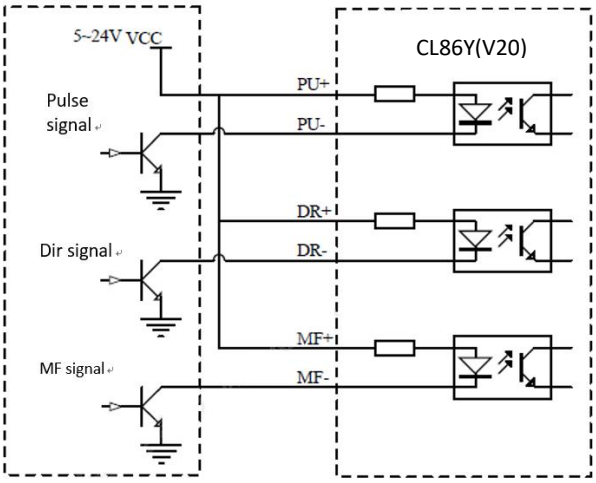


Common positive connection

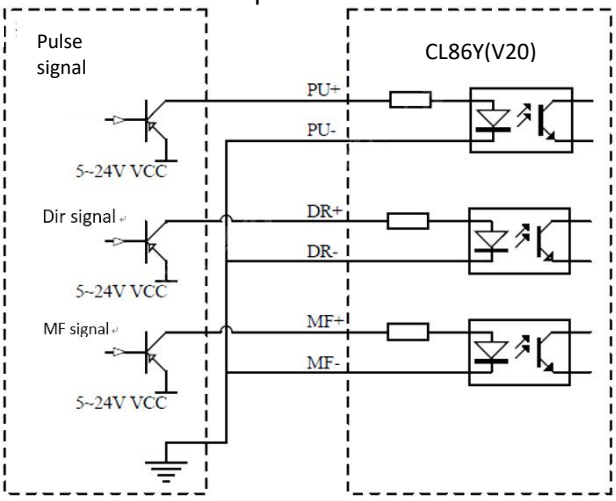


Common negative connection

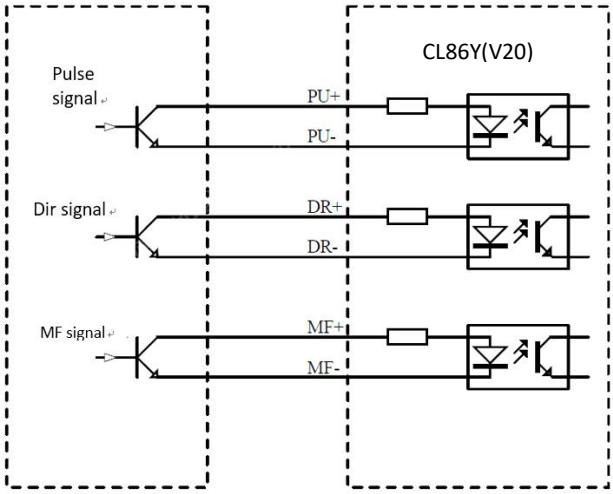


Differential connection

### 4.3.2 Output signal

The driver output signal is isolated by an optocoupler and the drive current is max 50mA.

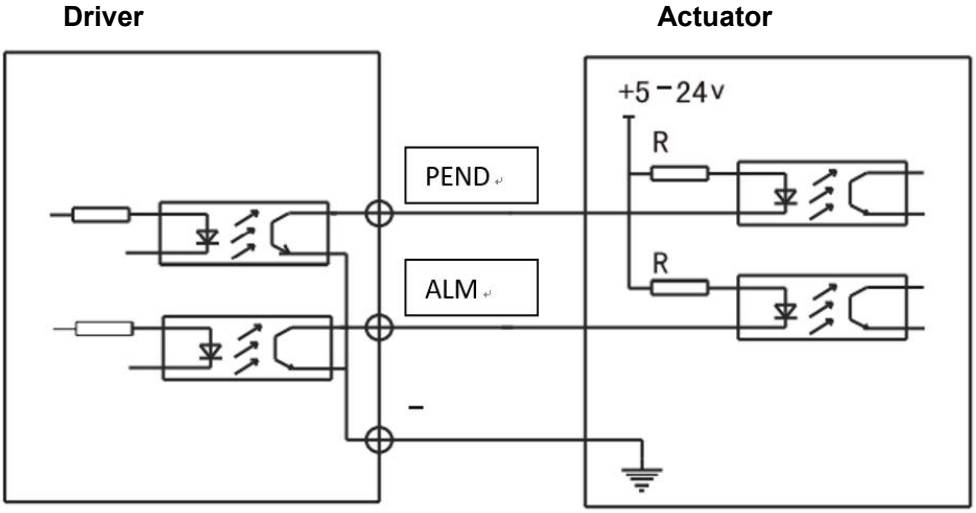


Common negative end connection

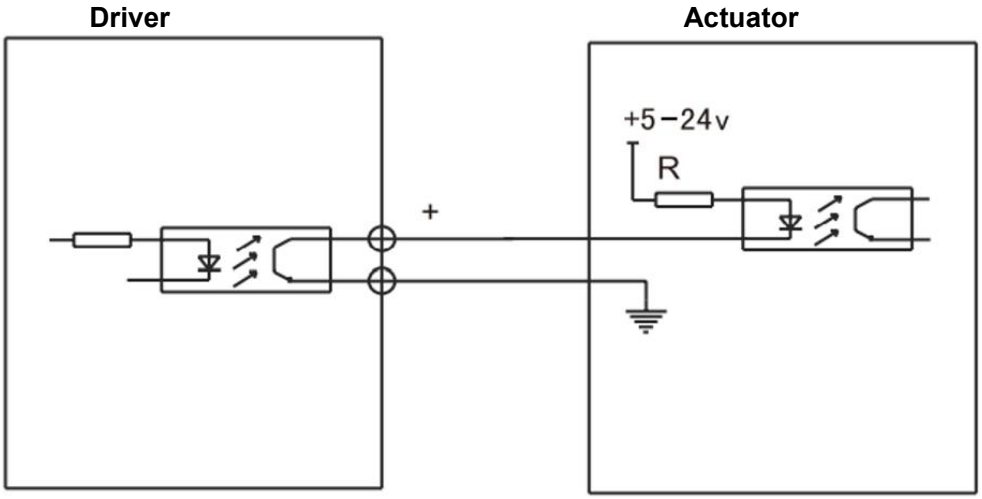


Independent termination method

## 4.4 Signal input timing diagram

CL86Y(V20) driver In order to avoid abnormal operation of the driver control motor, please refer to the following diagram for the timing diagram of the input signal:

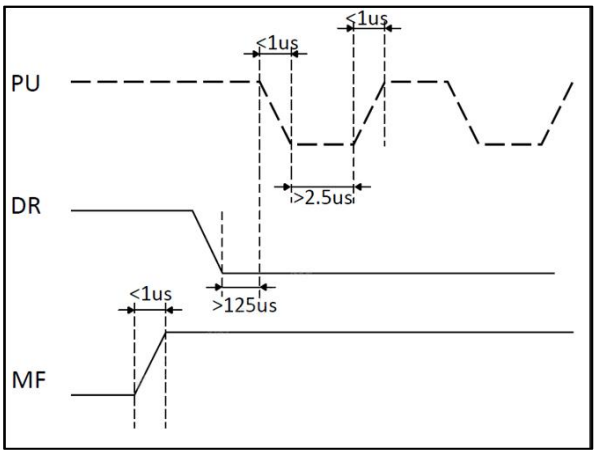

# Chapter 5 Driver Status Indicators

The CL86Y(V20) driver has an alarm prompt. After the driver alarms, the alarm indicator state indicates the alarm information of the driver. The specific alarm information is shown in the following table.

| Fault information | ALM Pilot lamp | Resetting |
|---|---|---|
| Overcurrent or interphase short circuit | Flicker once | Power-off reset |
| Overvoltage of supply | Flicker twice | Automatic restoration of standard voltage |
| The power supply voltage is too low. | Flicker Three times | Automatic restoration of standard voltage |
| The Drive phase error | Flicker four times | Cables are connected correctly. Restart and restore |
| Drive overtolerance | Flicker five times | Release/power-off reset or MF clear out alarm |
| Drive encoder error | Flicker six times | Cables are connected correctly. Restart and restore |

# Chapter 6 General Troubleshooting methods

| phenomenon | Possible situation | Solution measure |
|---|---|---|
| Motor failure | The power light is off | Check the power supply circuit. The power supply is normal |
| | The motor locks the shaft but does not turn | The IO signal is weak and the signal current is increased |
| | Too little speed | Selection speed |
| | Whether the release signal MF is connected | Will release the signal MF does not connect |
| | Instruction input error | Check whether the upper computer has a switch output |
| Motor steering error | Motor reversal | Replace motor wiring sequence or adjust instruction direction |
| | The motor line has a break | Check whether the cable is in poor contact |
| | The motor has only one direction | Input port damage |
| Alarm indicator light | The motor wire is connected incorrectly | Check the wiring |
| | The voltage is too high or low | Check power supply |
| | The motor or drive is damaged | Replace the motor or drive |
| Wrong position or speed | Signal interference | Eliminate interference, reliable grounding |
| | Instruction input error | Check the upper computer instructions to ensure correct output |
| | Speed setting error | Check the DIP switch status and connect it correctly |
| | Motor tripping | Check whether the command speed is too large and the motor selection is small |
| The driver terminal is burned out | Short-circuit between terminals | Check the power polarity or external short circuit |
| | The internal resistance between terminals is too large | Check whether excess solder is added to the wire and wire connection to form tin pellets |
| Motor stalling | The acceleration and deceleration time is too short | Reduce the command acceleration or increase the driver filter parameter |
| | Motor torque too small | Select high torque motor |
| | Heavy load | Check the load weight and quality, adjust the mechanical structure |
| | Too little current | Check dip switches to increase the output current of the driver |