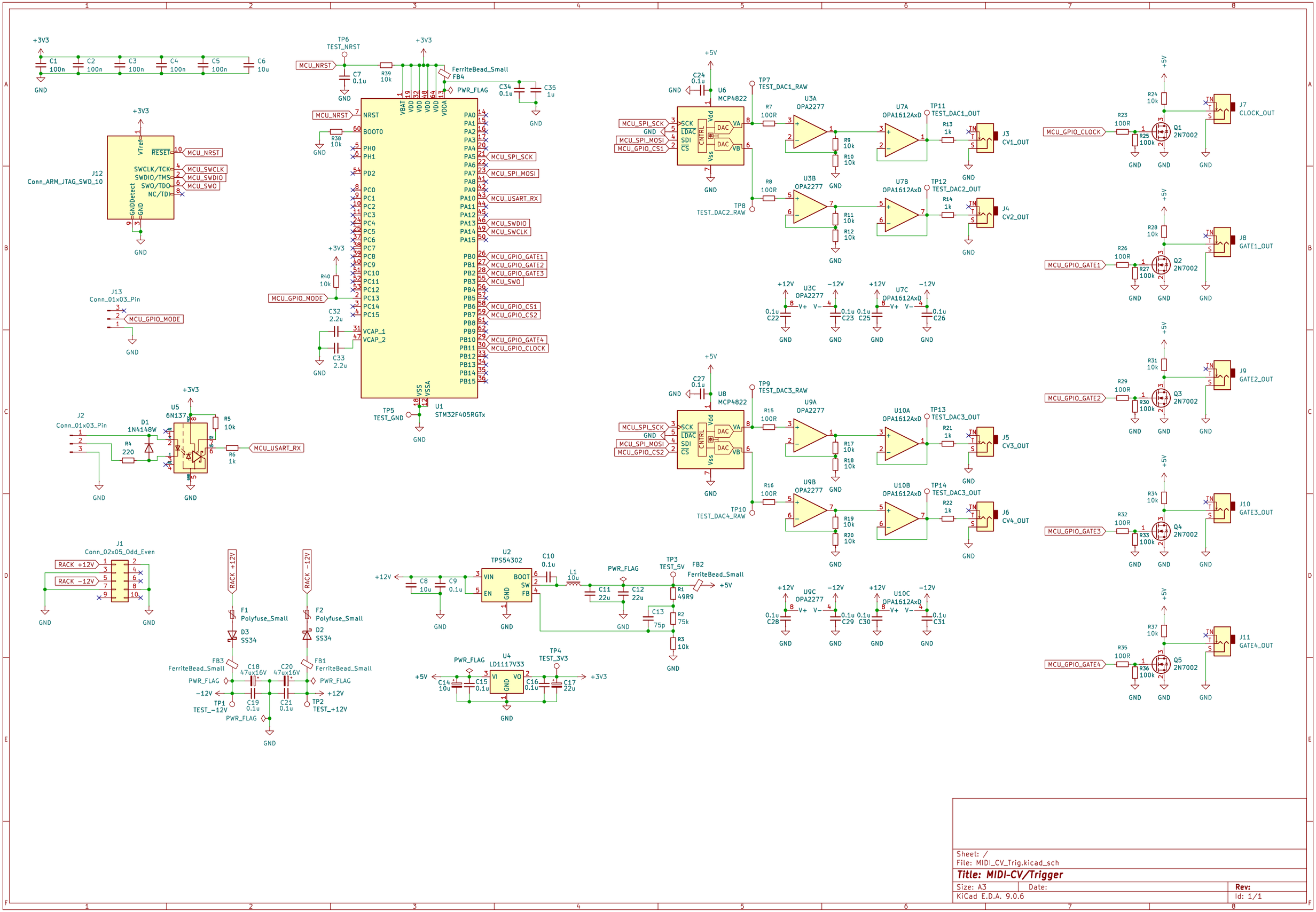

Sheet: /
File: MIDI_CV_Trig.kicad_sch

Title: MIDI-CV/Trigger

Size: A3	Date:	Rev:
KiCad E.D.A. 9.0.6		Id: 1/1