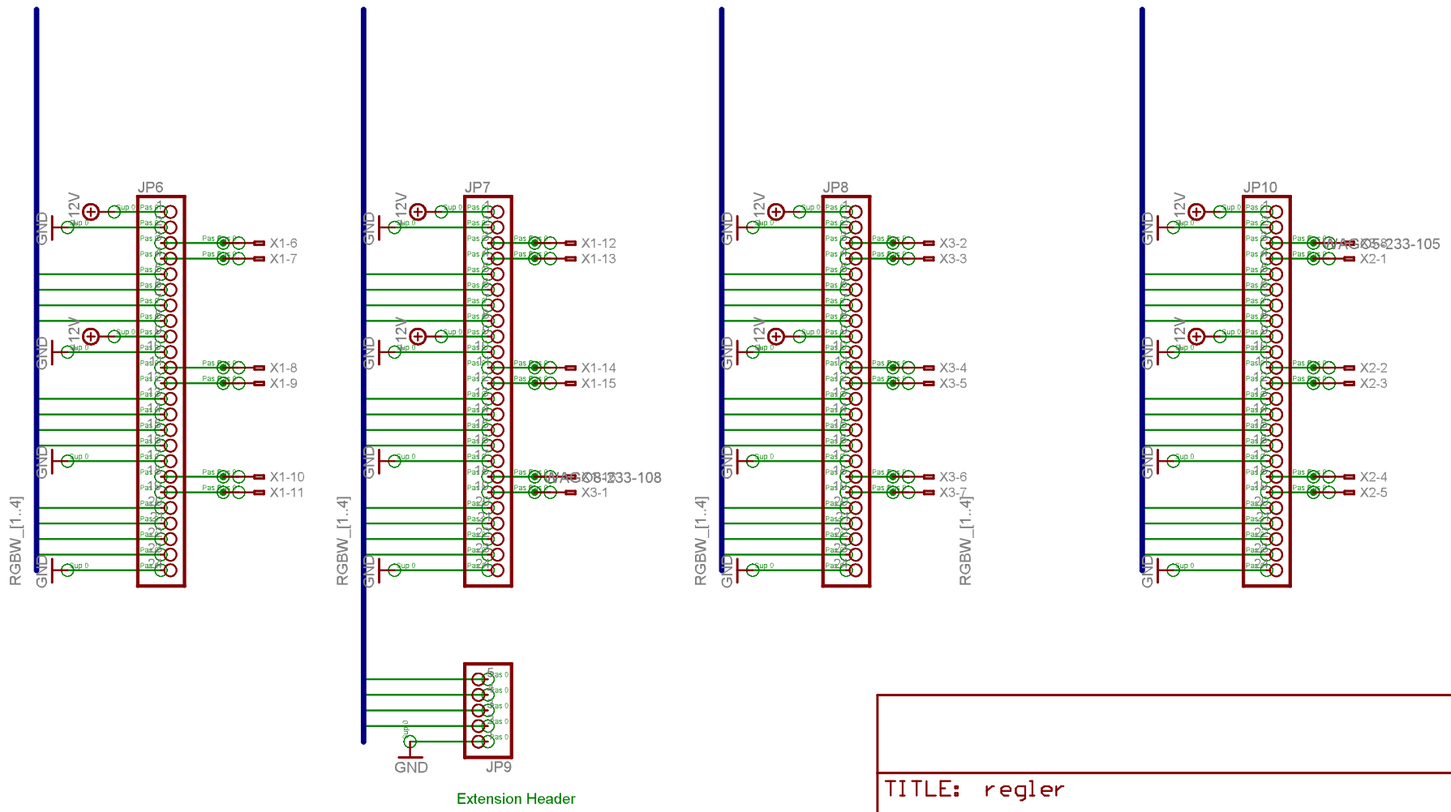

TITLE: regler	
Document Number:	REV:
Date: 4/02/2011 07:30:29p	Sheet: 1/1

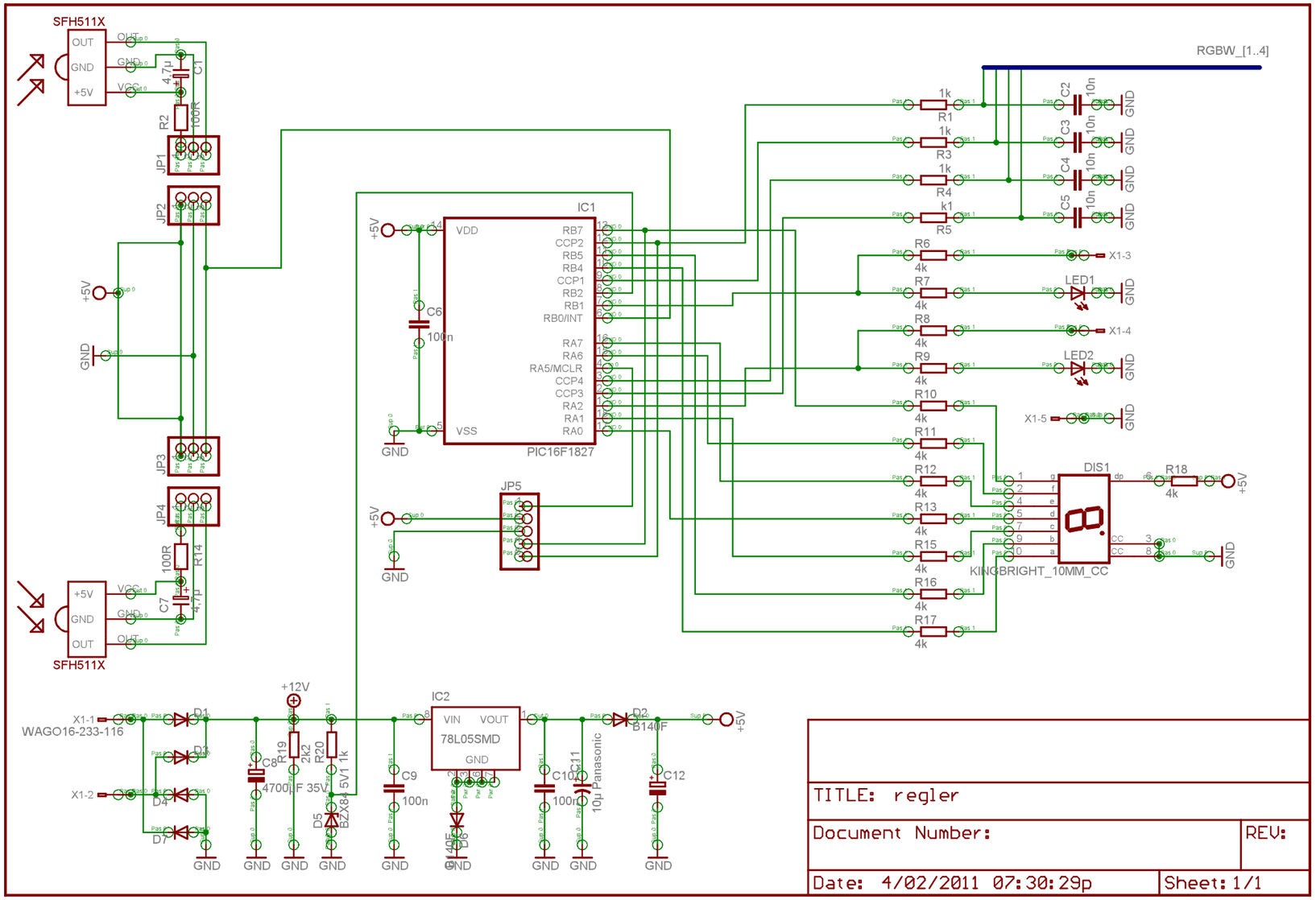
SFH511X
OUT
GND
+5V
VCC
4,7µ
C1
R2
100R
JP1
JP2
JP3
JP4
JP5
+5V
GND
IC1
VDD
VSS
RB7
CCP2
RB5
RB4
CCP1
RB2
RB1
RB0/INT
RA7
RA6
RA5/MCLR
CCP4
CCP3
RA2
RA1
RA0
PIC16F1827
C6
100n
RGBW_[1..4]
R1
1k
R3
1k
R4
1k
R5
k1
R6
4k
R7
4k
R8
4k
R9
4k
R10
4k
R11
4k
R12
4k
R13
4k
R15
4k
R16
4k
R17
4k
C2
10n
C3
10n
C4
10n
C5
10n
X1-3
X1-4
X1-5
LED1
LED2
DIS1
KINGBRIGHT_10MM_CC
R18
4k
R14
100R
C7
4,7µ
SFH511X
+12V
IC2
VIN
VOUT
78L05SMD
GND
X1-1
WAGO16-233-116
X1-2
D1
D2
B140F
D3
D4
D5
BZX84 5V1
D6
D7
R19
2k2
R20
1k
C8
4700µF 35V
C9
100n
C10
100n
C11
10µ Panasonic
C12
TITLE: regler
Document Number:
REV:
Date: 4/02/2011 07:30:29p
Sheet: 1/1