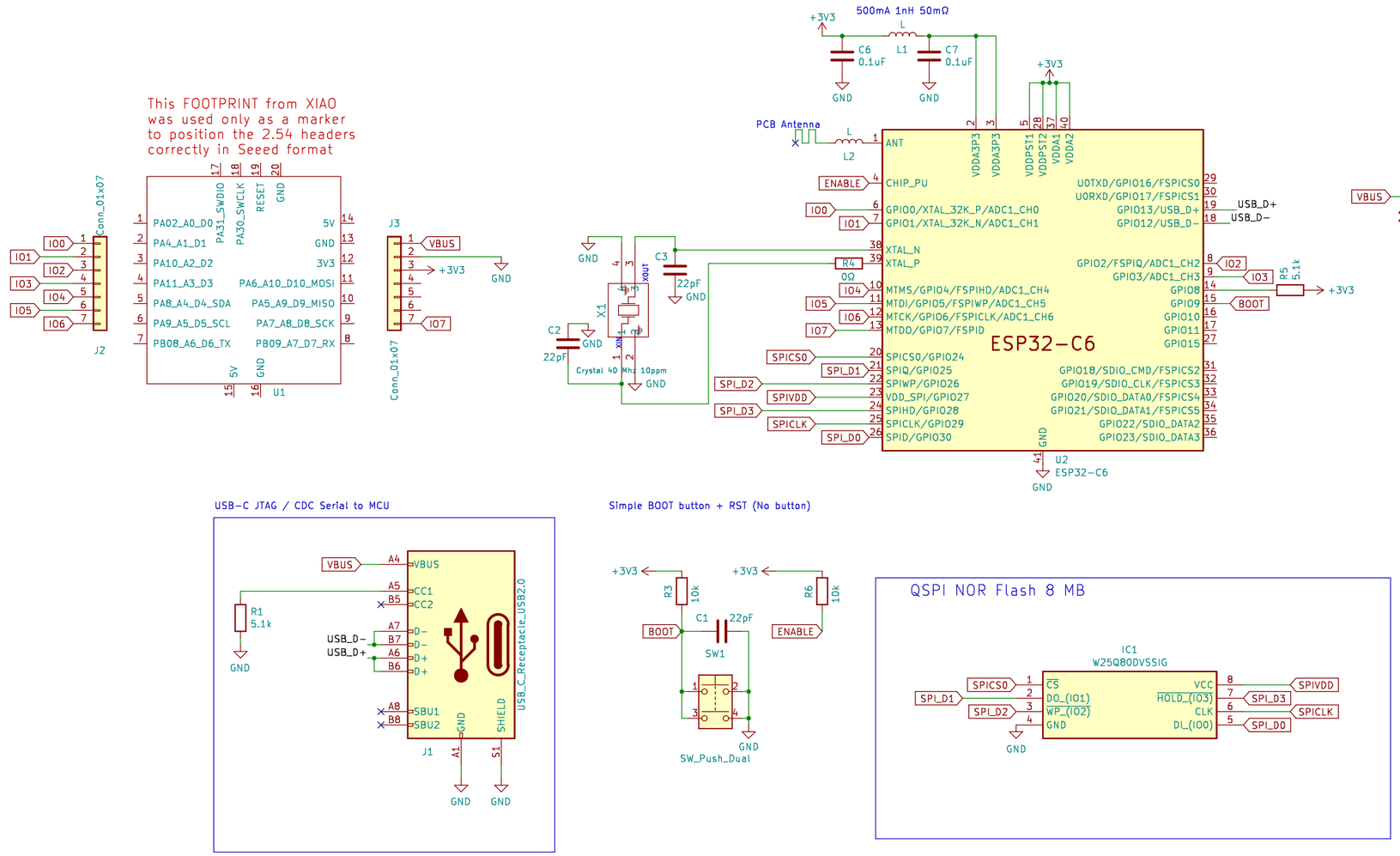

Sheet: /
File: C6-40-Flash-test.kicad_sch

Title: Testing ESP32C6 in a XIAO footprint

Size: A3	Date: 2024-10-24	Rev: 1.0
KiCad E.D.A. kicad 7.0.11-7.0.11~ubuntu22.04.1		Id: 1/1