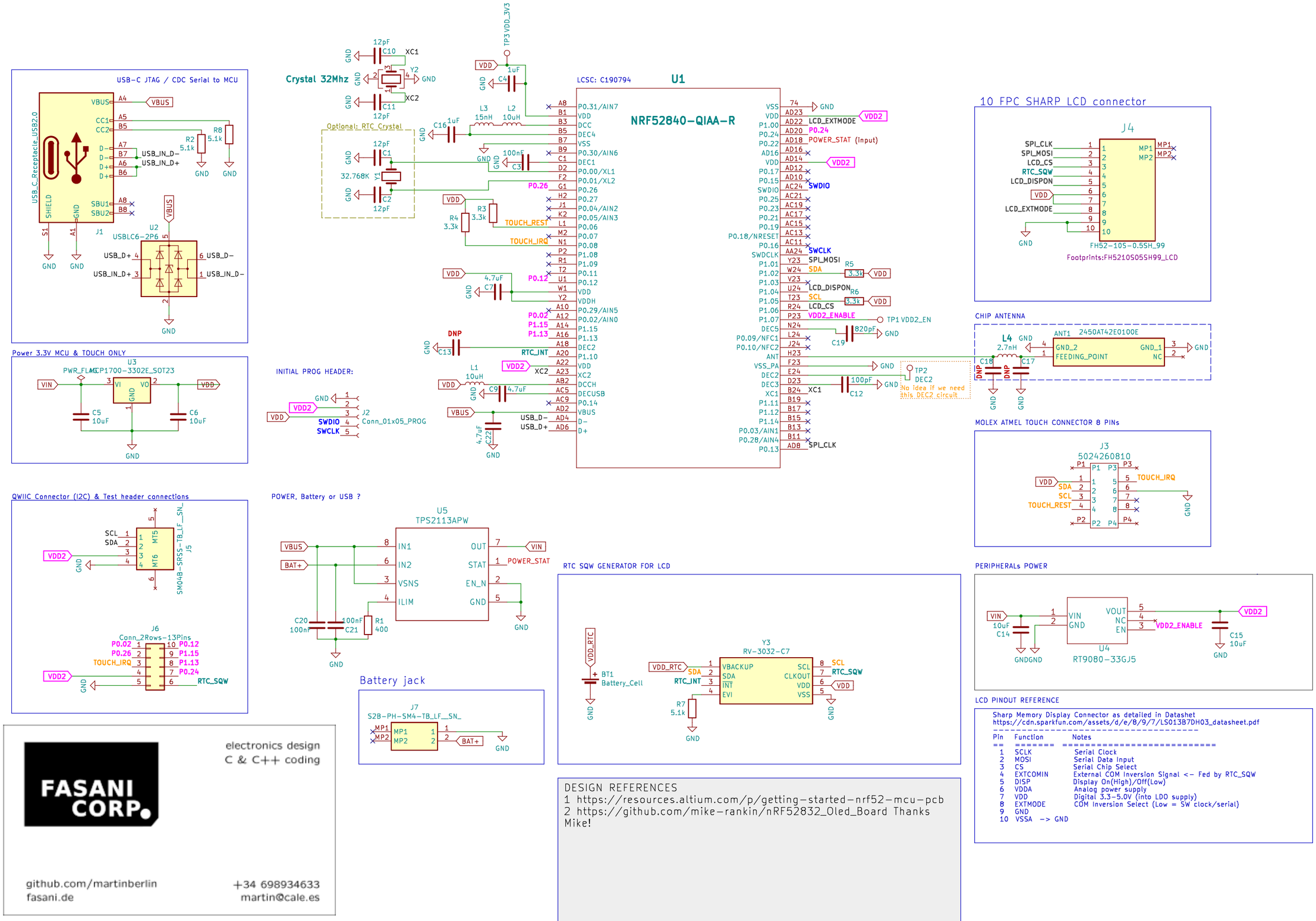
USB-C JTAG / CDC Serial to MCU
USB_C_Receptacle_USB2.0
J1
VBUS
CC1
CC2
D-
D+
SBU1
SBU2
SHIELD
GND
R2 5.1k
R8 5.1k
USB_IN_D-
USB_IN_D+
U2
USBLC6-2P6
USB_D+
USB_D-
Power 3.3V MCU & TOUCH ONLY
U3
PWR_FLAG
MCP1700-3302E_SOT23
VIN
VO
VDD
C5 10uF
C6 10uF
Crystal 32Mhz
C10 12pF
C11 12pF
XC1
XC2
Y2
Optional: RTC Crystal
C1 12pF
C2 12pF
32.768K
Y1
C16 1uF
L3 15nH
L2 10uH
C3 100nF
R3 3.3k
R4 3.3k
TOUCH_REST
TOUCH_IRQ
C7 4.7uF
P0.26
P0.02
P1.15
P1.13
P0.12
DNP
C13
RTC_INT
L1 10uH
C9 4.7uF
C22 4.7uF
TP3VDD_3V3
C4 1uF
LCSC: C190794
U1
NRF52840-QIAA-R
P0.31/AIN7
P0.30/AIN6
P0.00/XL1
P0.01/XL2
P0.27
P0.04/AIN2
P0.05/AIN3
P0.06
P0.07
P0.08
P1.08
P1.09
P0.11
P0.12
P0.29/AIN5
P0.02/AIN0
P1.15
P1.13
P1.10
DECUSB
P0.14
P0.09/NFC1
P0.10/NFC2
P0.03/AIN1
P0.28/AIN4
P0.13
LCD_EXTMODE
P0.24
POWER_STAT (input)
SWDIO
SWCLK
SDA
SCL
LCD_DISPON
LCD_CS
VDD2_ENABLE
TP1 VDD2_EN
C19 820pF
TP2 DEC2
No idea if we need this DEC2 circuit
C12 100pF
SPI_CLK
SPI_MOSI
10 FPC SHARP LCD connector
J4
FH52-10S-0.5SH_99
Footprints:FH5210S05SH99_LCD
CHIP ANTENNA
L4 2.7nH
ANT1 2450AT42E0100E
GND_2
FEEDING_POINT
GND_1
NC
C18 DNP
C17 DNP
MOLEX ATMEL TOUCH CONNECTOR 8 PINs
J3
5024260810
INITIAL PROG HEADER:
J2
Conn_01x05_PROG
QWIIC Connector (I2C) & Test header connections
J5
SM04B-SRSS-TB_LF__SN_
J6
Conn_2Rows-13Pins
POWER, Battery or USB ?
U5
TPS2113APW
IN1
IN2
VSNS
ILIM
OUT
STAT
EN_N
POWER_STAT
C20 100nF
C21 100nF
R1 400
Battery jack
J7
S2B-PH-SM4-TB_LF__SN_
BAT+
RTC SQW GENERATOR FOR LCD
VDD_RTC
BT1
Battery_Cell
Y3
RV-3032-C7
VBACKUP
CLKOUT
R7 5.1k
RTC_SQW
PERIPHERALs POWER
VIN
10uF C14
U4
RT9080-33GJ5
VOUT
NC
EN
VDD2_ENABLE
C15 10uF
LCD PINOUT REFERENCE
Sharp Memory Display Connector as detailed in Datasheet
https://cdn.sparkfun.com/assets/d/e/8/9/7/LS013B7DH03_datasheet.pdf
Pin Function Notes
1 SCLK Serial Clock
2 MOSI Serial Data Input
3 CS Serial Chip Select
4 EXTCOMIN External COM Inversion Signal <- Fed by RTC_SQW
5 DISP Display On(High)/Off(Low)
6 VDDA Analog power supply
7 VDD Digital 3.3-5.0V (into LDO supply)
8 EXTMODE COM Inversion Select (Low = SW clock/serial)
9 GND
10 VSSA -> GND
DESIGN REFERENCES
1 https://resources.altium.com/p/getting-started-nrf52-mcu-pcb
2 https://github.com/mike-rankin/nRF52832_Oled_Board Thanks Mike!
FASANI CORP.
electronics design
C & C++ coding
github.com/martinberlin
fasani.de
+34 698934633
martin@cale.es