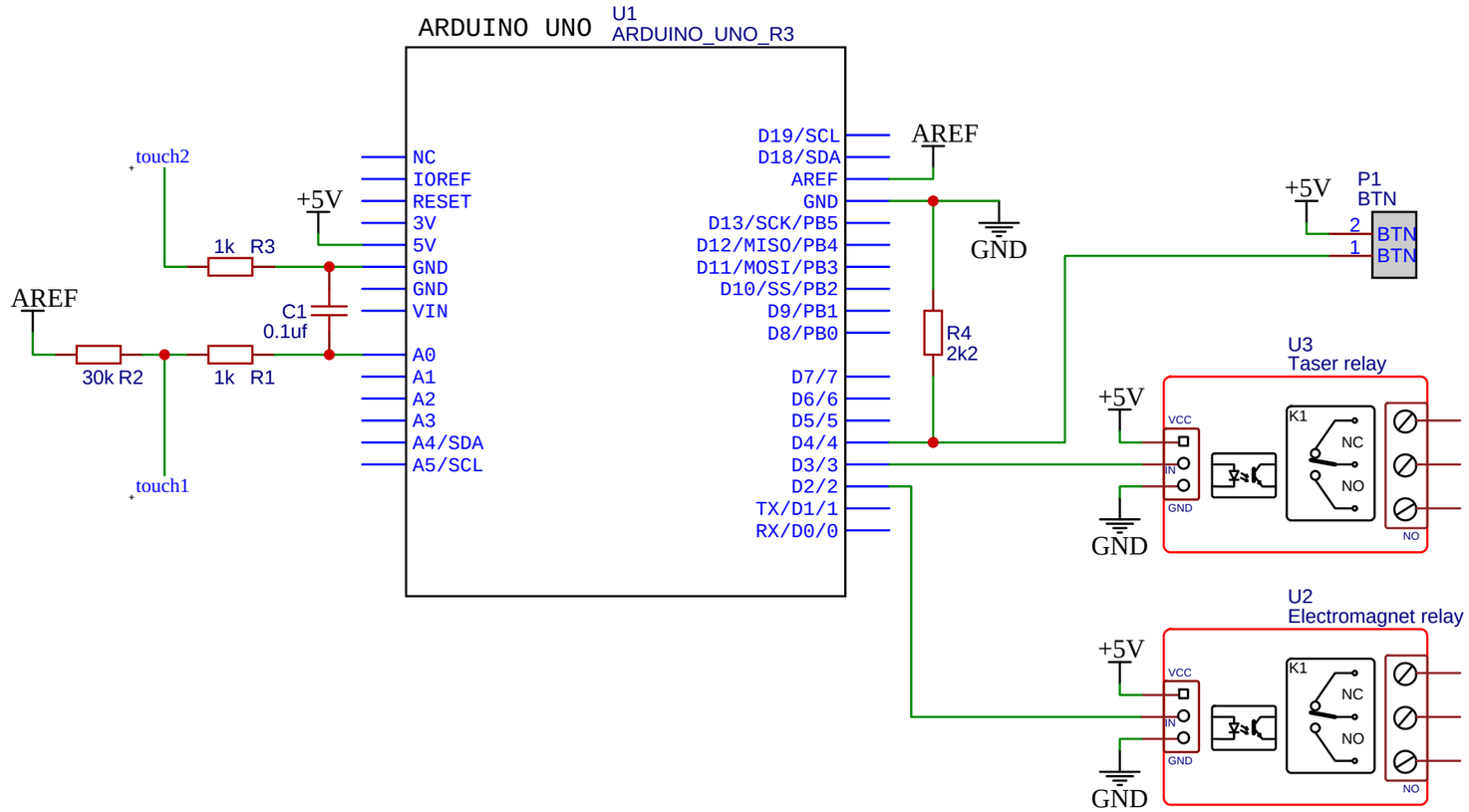

TITLE: human-circuit-schematic		REV: 1.0
嘉立创EDA	Company: Marty	Sheet: 1/1
	Date: 2023-01-24	Drawn By: Martin Cornu