General principle of the electronic circuit.

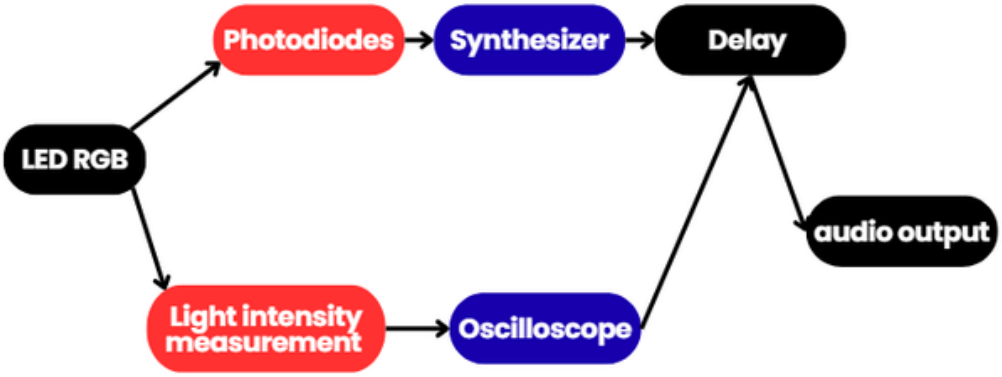

LED control

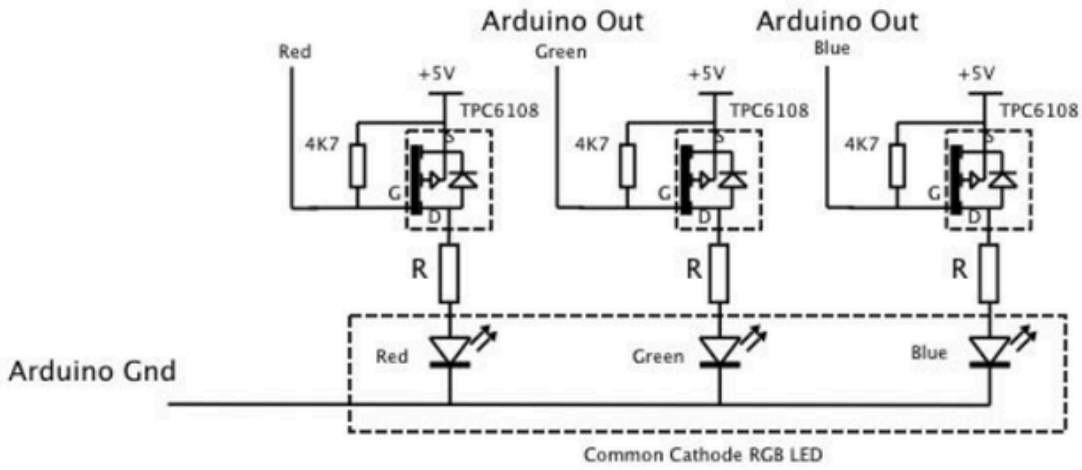

Photodiode

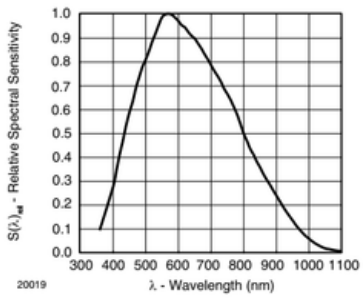

Fig. 7 - Relative Spectral Sensitivity vs. Wavelength

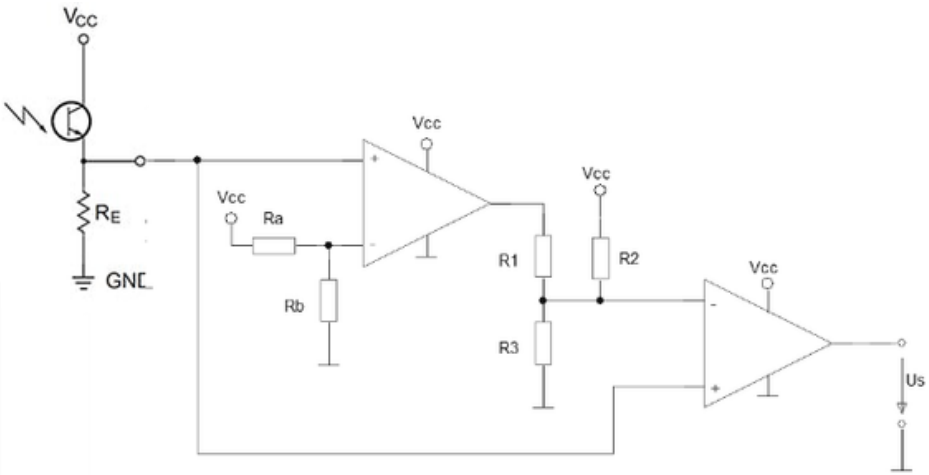

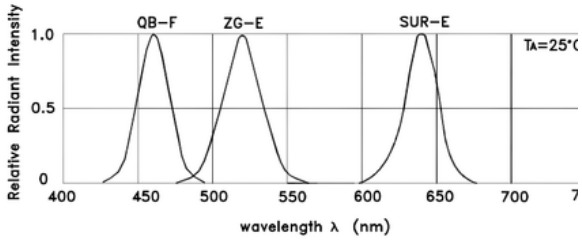

RELATIVE INTENSITY Vs. WAVELENGTH

Music synthesizer

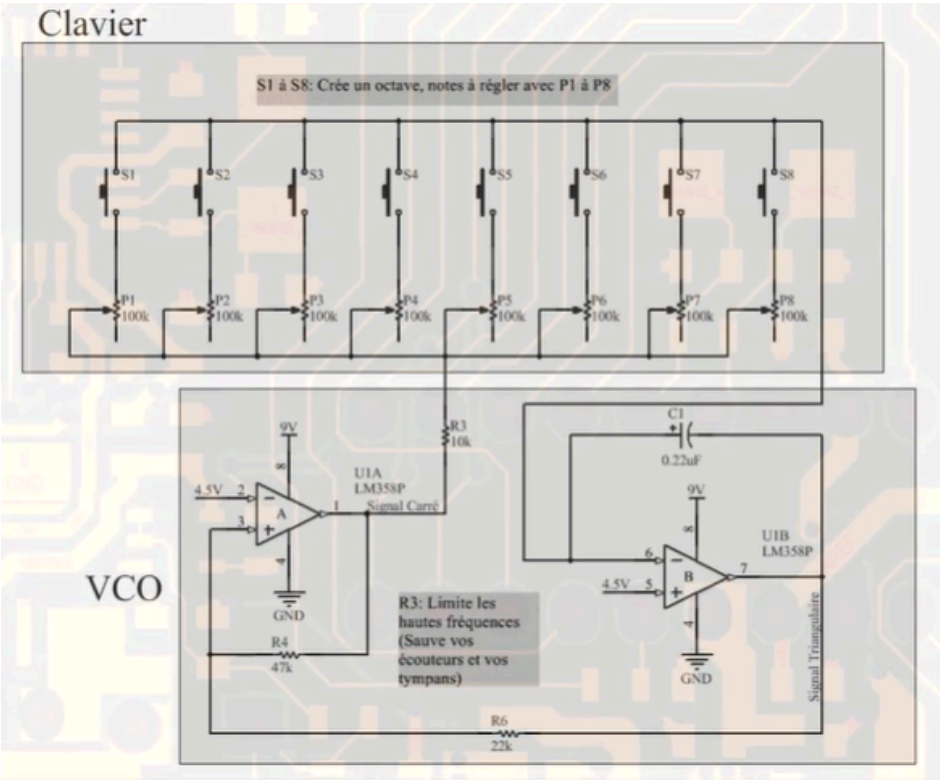
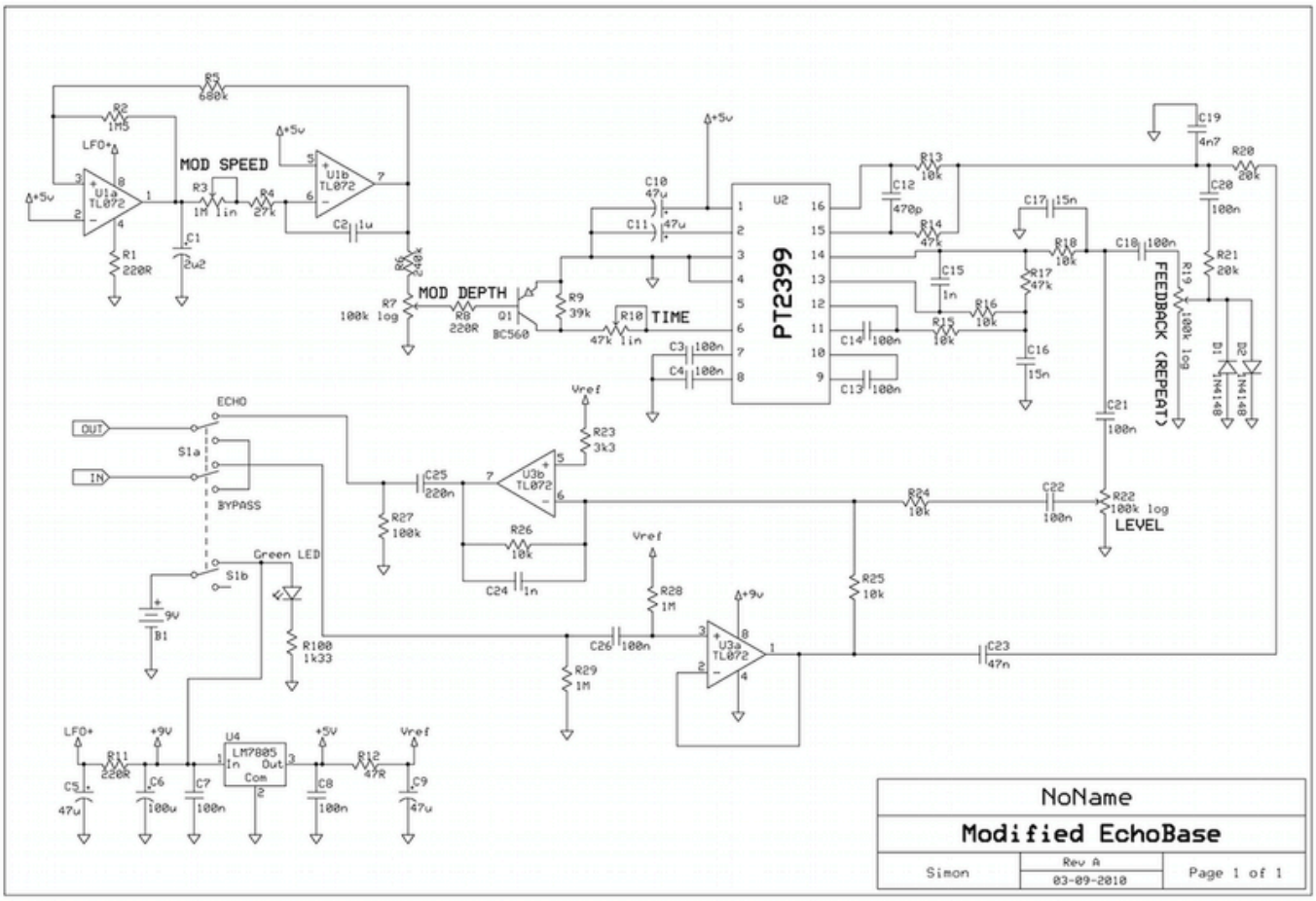
delay PT2399