Key Engineering Materials
ISSN: 1662-9795, Vol. 841, pp 54-58
doi:10.4028/www.scientific.net/KEM.841.54
© 2020 Trans Tech Publications Ltd, Switzerland
Submitted: 2019-07-23
Revised: 2019-10-22
Accepted: 2019-11-20
Online: 2020-05-05

Numerical Simulation of Material Plastic Deformation Using the Drawing Forming Process of Contoured Internal Surface Tubes

Martin Necpal[1,a*], Erika Hodúlová[1,b] and Maroš Martinkovič[1,c]

[1]Faculty of Material Science and Technology in Trnava Jána Bottu č. 2781/25, 917 24, Trnava, Slovakia

[a]martin.necpal@stuba.com, [b]erika.hodulova@stuba.sk, [c]maros.martinkovic@stuba.sk

Keywords: Finite element method, Multi-rifled tube, Cold drawing process, Forming tool geometry

Abstract. Production of multi-rifled seamless steel tubes employing cold draw process using multi-rifled mandrel is quite a modern technology. The important characteristic of the tube drawing process, unlike the tube with internal rifling, is the corner filling which influences the dimension accuracy of the internal shape of the tube. In this study, the influence of drawing tool dimensions and mandrel shape on to final rifling filling was investigated. Draw process has been simulated by using the three-dimensional rigid-plastic finite element method (FEM) by using DEFORM 3D software. The results of numerical simulation show that the shape of drawing tools and process conditions have a significant influence on the forming process and final shape and properties of the workpiece.

Introduction

Internal multi-rifled tubes, i.e. tubes with inner grooving are used over the last few years in high-pressure heat exchangers, evaporator, condenser, and other devices. Usually, the inner tube surface can have a helical or straight rifling pattern, depending on customer requirements. The production of tubes usually consists of hot rolling and next to the multiple cold drawing with intermediate heat treatment while is the treatment required to retain the plasticity of the material. Usually, the final cold drawing operation procedure is used for grooving pattern on the inner surface of the tube [1]. The multi-rifled mender is used on the final drawing pass and the material of the tube is formed a typical pattern on the inner shape. It is very important to fulfill all geometrical requirements of the rifling. The reliable results of the forming process affect these factors [2]:

- dimension and material formability of input feedstock,
- technological parameter of forming (drawing velocity, method of lubrication and type of lubricant)
- the geometry of the forming tools (rifled mandrel)

There are several approaches on how to predict factors that influence of the forming process. A very expensive approach in industrial conditions is technological experiments via “trial-end-error”. Due to the need to reduce economic costs, experiments of the forming process are supplemented with analytical calculations or simulation models. Analytical calculations are reliably usable only for simple forming processes [3]. More complicated forming problems can be successfully solved using Finite Element “FEM” or Finite Volume “FVM” or Finite Difference “FDM” computational Methods. In some studies [4], theTaguchi method of experimental design was used to plan the numerical simulation. In the case of simulation model design is necessary to verify this model. To validate the simulation model, neuron strain imaging measurements can be performed [5]. In some special cases of cold drawing process analysis, it is necessary to implement into a finite element application modified model, by means a develop Fortran subroutine [6]. Using FEM analyses to determine the initial tube size that gives the appropriate mechanical properties after drawing can be found in some works [7]. Not only the dimension and geometry of the final tube are importing. Using macro-micro coupling finite element method analysis surface roughening of cod drawn can be found in the paper [8].

All rights reserved. No part of contents of this paper may be reproduced or transmitted in any form or by any means without the written permission of Trans Tech Publications Ltd, www.scientific.net. (Research Gate for subscription journals-08/02/24,14:53:36)

To investigate the quality of the inner surface and dimension of final rifling filling of the tube depending on mandrel geometry were conducted base on the DEFORM 3D software and FEM result in this paper.

FEM

From the variational approach, the first-order variation of functional using the penalized form of incompressibility condition for rigid-plastic material can be written as follows:

$$\delta \prod = \int_V \bar{\sigma}\delta\bar{\varepsilon}\, dV + K \int_V \dot{\varepsilon}_V\, \delta\dot{\varepsilon}_V\, dV - \int_{SF} \bar{t}_i\, \delta V_i dS = 0 \quad (1)$$

Eq. 1 can be converted to non-linear algebraic equations by finite element discretization procedure. The solution of the non-linear simultaneous equations is obtained by the Newton-Raphson method.

Ferritic-pearlitic low carbon steel grade materials, also known as mild steel, can be used for the production of seamless steel tubes using cold drawing technology. The material of mild steel is without heat treatment, or the material is after normalization annealing. Low carbon steel, is now the most common form of steel of tubes because its price is relatively low while it provides material properties that are acceptable for the cold drawing process.

For simulation the material was considered as plastic, the hardening is assumed as isotropic, and yield function type is set as Von Mises. As the temperature stays lower in cold drawing, the forming material properties do not vary and can, therefore, be supposed to be independent of the temperature variation. The relationship of material between true stress-strain for the FE was obtained be simple tensile strength test is given by [9]:

$$\sigma = 513\bar{\varepsilon}^{\,0.44} + 325 \text{ [MPa]} \quad (2)$$

The forming tools, (mandrel and die) was considered as rigid bodies. The boundary condition that represents the speed of drawing is set to 9 m.min^{-1}. The friction coefficients between the tube and die and the tube and mandrel under lubricated condition are determined by FE modeling by comparing measured and simulated plug, die and drawing forces as follows [10] and the friction shear was set 0.05421.

The dimension of the drawing tube is diameter D 28mm and wall thickness W_t of 4mm. Die approach angle is 8° and the final diameter is 25mm. The calibration length of die c is 4mm. The mandrel cross-sectional shape and dimensions are shown in Fig. 1.

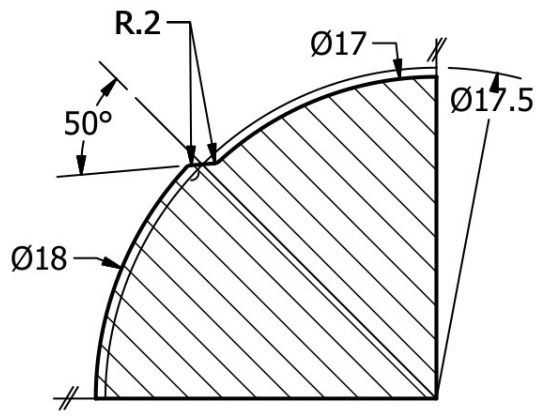

Fig. 1 Mandrel cross-sectional shape and dimensions

The tube domain remained filed by tetrahedron mesh. The size of the mesh is closely related to the accuracy and the number of mesh is related to the computation performance and calculation time. The tube domain was divided into subdomain for optimum meshing with the rib filling subdomain having the smallest elements. As a rib area is a part of the high-stress domain with the smallest element length after every 50 steps the re-mesh procedure was implemented to continue the process and achieved the convergence. The cross-section of the tube around rifling with visible mesh is illustrated in Fig. 2.

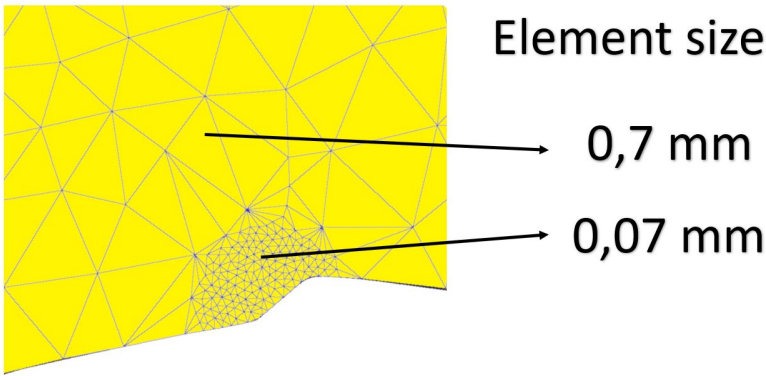

Fig. 2 Cross-section of the tube with tetrahedral FEM mesh

Tube cross-section area reduction is calculated by:

$$\text{reduction} = \frac{S_0 - S}{S_0} \cdot 100\ [\%] \tag{3}$$

Where S_0 is the tube area before drawing and S is the tube area after drawing. At given dimensions of formed tube, $S_0 = 301.59 mm^2$ and $S = 263.89\ mm^2$. Tube reduction determined by Eq. 3 is 12.5%.

The main goal of this article was to develop suitable numerical models at different geometry of mandrel to investigate the final rifling filling. Three types of geometries of the mandrel can be used. The difference of mandrel geometry was at groove angle "δ". The grove angle "δ" can be positive or negative as is illustrated in Fig. 3.

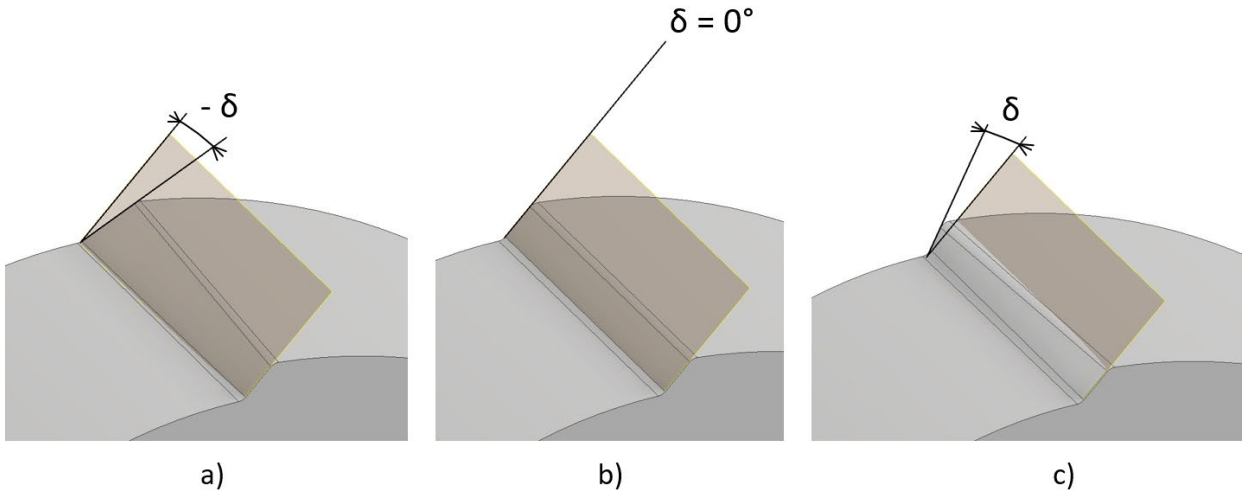

Fig. 3 Grove angle of mandrel a) negative grove angle b) zeros grove angle c) positive grove angle

Six simulations were performed with grove angle “δ” -15°, -10°, -5°, 5°, 10°, 15°, and final rifling filling was investigated in the cross and the longitudinal section as illustrated in Fig. 4. An example of the grooving profiles is shown in Fig. 5. The filling was evaluated by the based measurement of the gap between the tube and the plug. The gap sizes of each simulation were measured in the DEFORM software postprocessor. The values of the gaps are shown in Table 1.

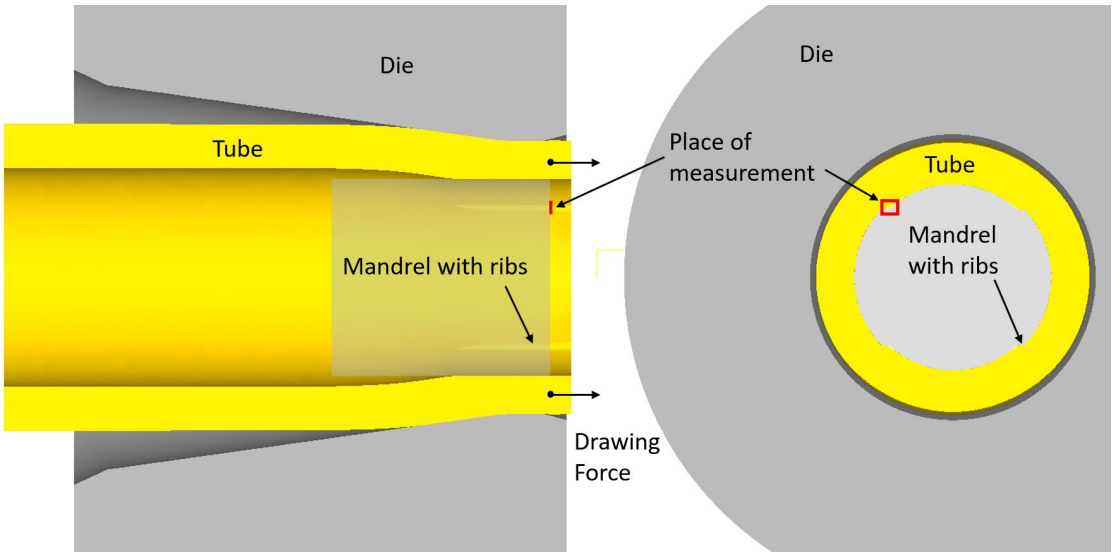

Fig. 4 Highlighted place of measurement

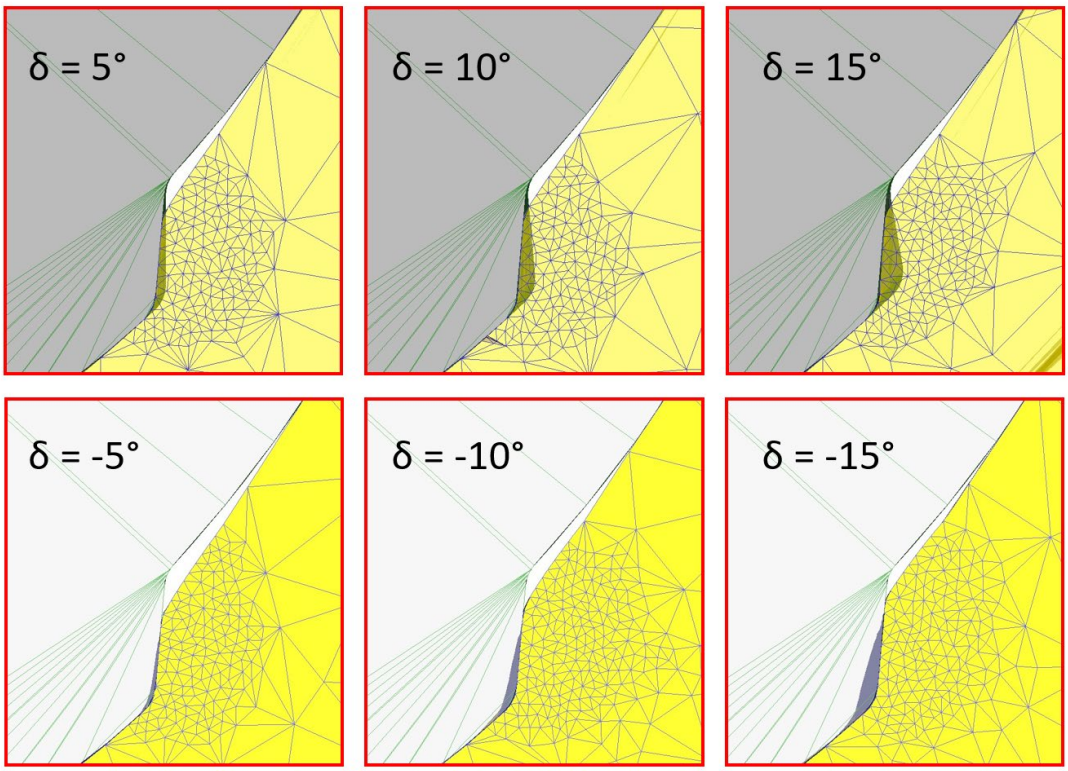

Fig. 5 Cross-section of the multi-rifled tube

Table 1 The gap size of internal rifling

grove angle "δ" of the mandrel groove [°]	the gap size between the tube and the mandrel [mm]
5	0,22
10	0,21
15	0,21
-5	0,18
-10	0,17
-15	0,15

Conclusions

The methodology of a numerical simulation of the multi-rifled tube drawing process is described in this work. It is shown that the geometry of mandrel affected internal rifling filling and the final inner surface quality of the tube. It has been found that the negative grove angle has a beneficial effect rifling in the gap filling. By using FEM simulation and DEFORM 3D software, the design of the forming tools, as well as, the design of the drawing technology conditions can be significantly improved.

Acknowledgments

This work was supported by the Slovak Research and Development Agency under contract No. APVV-15-0319 and by the VEGA Grant No. 1/0122/16 of the Grant Agency of the Slovak Republic Ministry of Education.

References

[1] P. Bella, R. Durcik, M. Ridzon, L. Parilak, Numerical simulation of cold drawing of steel tubes with straight internal rifling, Procedia Manuf. 15 (2018) 320-326.

[2] P. Bella, P. Buček, M. Ridzoň, M. Mojžiš, L. Parilák, Numerical simulation of multi-rifled tube drawing – finding proper feedstock dimensions and tool geometry, IOP Conf. Ser. Mater. Sci. Eng. 179 (2017) 12008.

[3] F. O. Neves, S. T. Button, C. Caminaga, F. C. Gentile, Numerical and experimental analysis of tube drawing with fixed plug, J. Brazilian Soc. Mech. Sci. Eng. 27 (2005) 426-431.

[4] R. Padmanabhan, M. C. Oliveira, J. L. Alves, L. F. Menezes, Influence of process parameters on the deep drawing of stainless steel, Finite Elem. Anal. Des. 43 (2007) 1062-1067.

[5] H. Palkowski, S. Brück, T. Pirling, A. Carradò, Investigation on the residual stress state of drawn tubes by numerical simulation and neutron diffraction analysis, Materials (Basel). 6 (2013) 5118-5130.

[6] P. J. McAllen, P. Phelan, Numerical analysis of axisymmetric wire drawing by means of a coupled damage model, J. Mater. Process. Technol. 183 (2007) 210-218.

[7] F. Boutenel, M Delhomme, V. Velay, R. Boman, Finite element modelling of cold drawing for high precision tubes, Comptes Rendus Mecanique, 346(8) (2018) 665-677.

[8] Zhang L, Xu W, Long J and Lei Z 2015 Surface roughening analysis of cold drawn tube based on macro-micro coupling finite element method J. Mater. Process. Technol. 224 189–99

[9] T. Holmquist, R. Johnson, Determination of constants and comparison for various constitutive models, J. Phys. 4 (1991) 853-860.

[10] M. Necpal, M. Martinkovič, S. Václav, Determination of the Coefficient of Friction Under Cold Tube Drawing Using FEM Simulation and Drawing Force Measurement, Res. Pap. Fac. Mater. Sci. Technol. Slovak Univ. Technol. 26 (2018) 29-34.