The usage of laser machining for manufacturing of the cutting insert prototype

Martin Necpal[1] , Maroš Martinkovič[1]
[1]Faculty of Materials Science and Technology in Trnava, Slovak University of Technology in Bratislava, 917 24 Trnava. Slovak Republic. E-mail: martin.necpal@stuba.sk, maros.martinkovic@stuba.sk

In this paper a method for creating chip breaker on cutting insert is described. For cutter inserts the powder is compressed into the molds, in a process. After pressing and sintering the cutting tools chip breaker looks like negative molds shape. For experimental cutting insert prototype is important to design and make molds with specific shape. Designing and production of new molds is time and cost consuming. Another way is to make insert with flat rake face and make chip breaker by an advanced machining method. Hard carbide material may be machined by laser ablation. This paper deals with possibility of laser ablation machine LASERTEC 80 Shape usage for creating of comprehensive chip breaker surface on the carbide insert.

Keywords: Laser micro machining, cutting tools, chip breaker

1 Introduction

Laser technology and laser beam is widely used in the manufacture and treatment of cutting tools. We encounter two basic types of use of the utilization of the laser beam in the treatment of cutting tools in practice „Laser processing and Laser surface texturing“.

Laser surface treatment of the tool surface provides thermal integration of binder with carbide compounds in the surface region. Thermal integration of cemented carbide of the tool material may improve the surface properties and fracture toughness of the cutting tool. This in turn improves the microstructure in the region irradiated by the laser beam. Laser treatment of cemented carbide cutting tool was investigated by Karatas et al. [1]. They found that laser surface treatment of cemented cutting tool improves the surface hardness. Multi directional cracks were observed due to rapid heating and high cooling rates of the surface.

The use of laser surface texturing on the tool rake face can modify the tribological properties presented at the chip-tool interface. The abrasive wear resistance of micro-textured tools in comparison to conventional (commercial) carbide insert containing a three-layered coating (TiCN-AL_2O_3-TiN) was investigated by Silva et al. [2]. They studied the tool performance during turning when using a maximum acceptable flank wear of 600µm. Jianxin et al. [3] investigated nano-scale surface texturing on the rake face close to the main cutting edge of the WC/TiC/Co carbide tools with femtosecond laser. These textured tools were then deposited with WS_2 solid lubricant coating. Dry cutting tests were carried out with the rake face textured tools (TT), the rake face textured tools deposited with WS_2 coatings (TT-WS_2), and the conventional carbide tools (CT). Neves at al. [4] evaluated the effectiveness of laser texturing on improving the substrate–coating adhesion of PVD coated cemented carbide tools. For this purpose, the substrates were textured with a Nd:YAG laser, in four different intensities, and then coated with a PVD TiAlN film. To determine the effectiveness of laser texturing, Rockwell C indentation and turning experiments were performed on both textured tools and conventional unlasered tools.

The possibility for creating chip breaker on cutting insert using laser micro-machining is described in this work. The ability of laser micro machining can be used for textured surfaces, but if you withdraw the material layer by layer, it is possible to create a more comprehensive deeper relief. This method of laser machining can be used in producing of the complex shaper of chip breaker on the cutting insert.

2 Experimental procedure and material

The sample used in this work was commercial carbide non coating insert CNMA120408 designed for turning operation. The original insert has flat facet rake area. Based on theoretical knowledge and experience of the company PRAMET has been proposed design of chip breaker in fig. 1. The rake angle varies between 16°-24°, chamfer angle is 2° and chamfer width approximately 0,15mm. The overall shape of chip breaker was modeled in CAD systems.

In this experiment, fiber laser machine LASERTEC 80 Shape, made by DMG Mori Seiki was used. It can continuously control five axis during machining. Laser source is a fiber ytterbium and provides a laser beam with a wavelength of 1 068nm. It operates only in pulse regime and frequency of pulses could be set between 20 to 100 kHz. Scanning speed of laser beam could be adjusted in range of 100 to 4 000 $mm.s^{-1}$. The maximum power of laser generator is 100W. Laser beam diameter is about 1µm. LASERTEC 80 Shape and LBM technology is suitable for machining of hard-machinable materials [5].

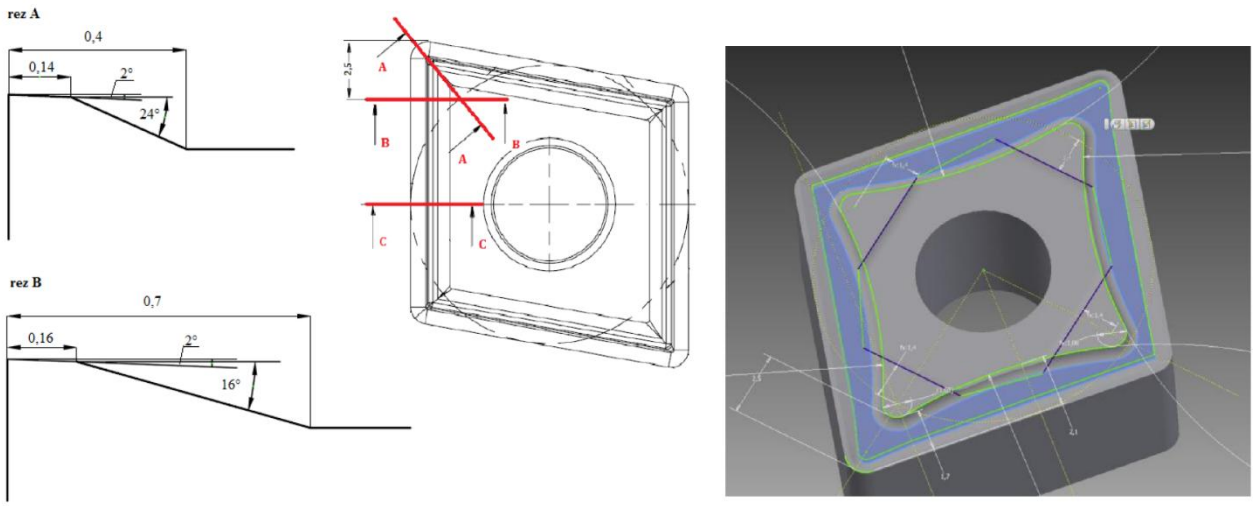

Fig. 1 Design and CAD model of chip breaker
Obr. 1 Návrh a CAD model tvarovača triesky

Data for machining were prepared using LpsWin software that is intended for this LBM machine. The first step is to import *.stl CAD data format. Due to the imported *.stl surface are then generated trajectory of the laser beam. For producing cavities by means of laser stock removal, 3D-CAD models of the cavities can be split up into individual layers, as fig. 2 shows.

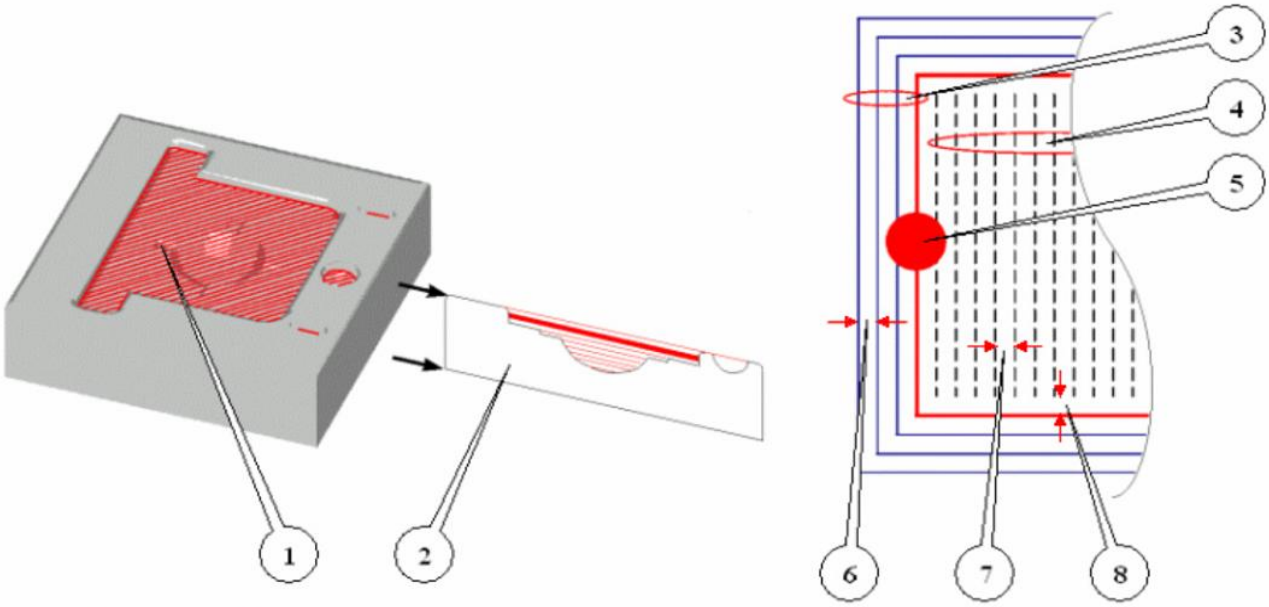

1: Cavity with hatching traces
2: Cross section of the cavity with slices
3: Border cuts: here are 4 border cuts
4: Hatching traces
5: Laser focus point
6: Track displacement for border cuts
7: Track displacement for hatching
8: Distance between hatch area and most inner border cut

Fig. 2 Stock removal into individual layers
Obr. 2 Odoberanie materiálu po jednotlivých vrstvách

The left part of the picture shows the cavity with hatching lines (1). (2) shows the cross section of the cavity with the slices. The traces of an arbitrary depth were computed by building the cut of the cavity surface and a plane, parallel to the X-Y-plane, in the desired depth. The result are some polygons (cutting polygons). Such a cutting polygon is the most outer polygon in (3). Parallel to this polygon are some further border cuts computed (here the number of border cuts are 4). The distance between two border cuts is the track displacement for border cuts (6). The rest of the slice will be hatched out by the laser beam (4), with a special track displacement (7). The distance between the hatching area and the most inner border cut (8) may be decreased by the hatch area enlargement. All these parameters are capable for editing [6].

As an insert is of small dimensions and original surface is flat, just 3-axis machine functionality need to be used. The result of the beam path in the program LpsWin is shown in fig. 3.

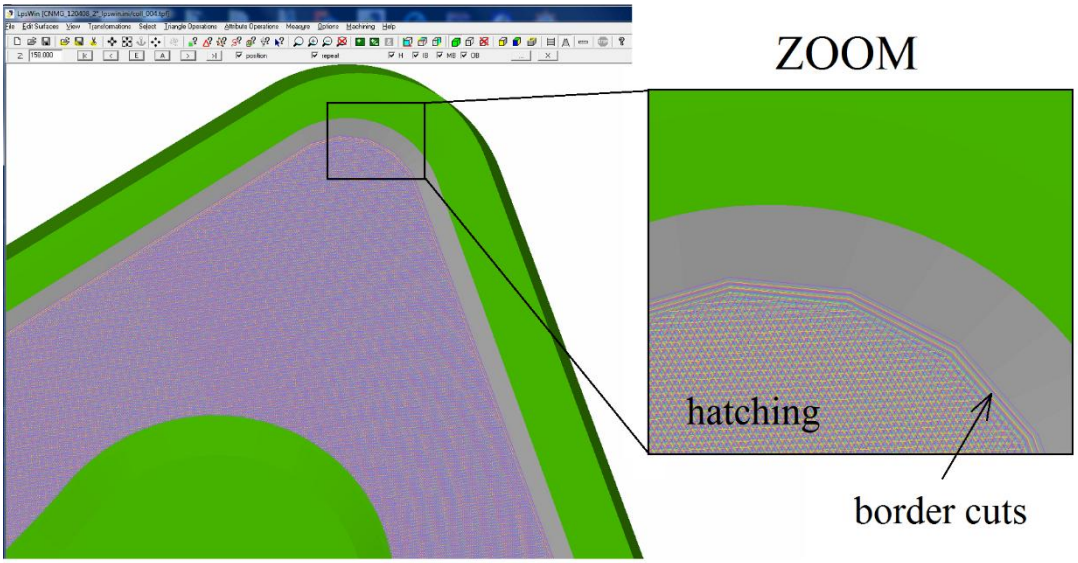

Fig. 3 Laser beam path in the LpsWin software
Obr. 3 Dráhy laserového lúča v softvéry LpsWin

The major factor responsible for reliable result of LBM machining is properly setting of machining parameters and laser source [7]. A simple experiment was undertaken for this purpose. On cemented carbide material were formed several samples with different parameters and then at a magnification of samples the satisfactory parameters were selected. During insert machining following parameters have been used: Pulse Frequency 60 KHz, laser beam Scanning Speed 2000mms^{-1}, laser Power 29W and Track Displacement (step-over) 10µm is the same for hatching and border cuts. Distance between the end of the hatch line and the innermost border cut is10 µm.

Using these parameters for machining the removal of one layer of sintered carbide was 1 µm. Whereas chip breaker was designed such that the maximum depth was 0.22 mm number of removed layers by LBM machining was 220. The total machining time lasted 25 min. After machining and cleaning the insert, the ATOS 3D scanner from GOM company has been used to compare original model and resulting shape. Surface after machining was assessed by using field emission scanning electron microscope.

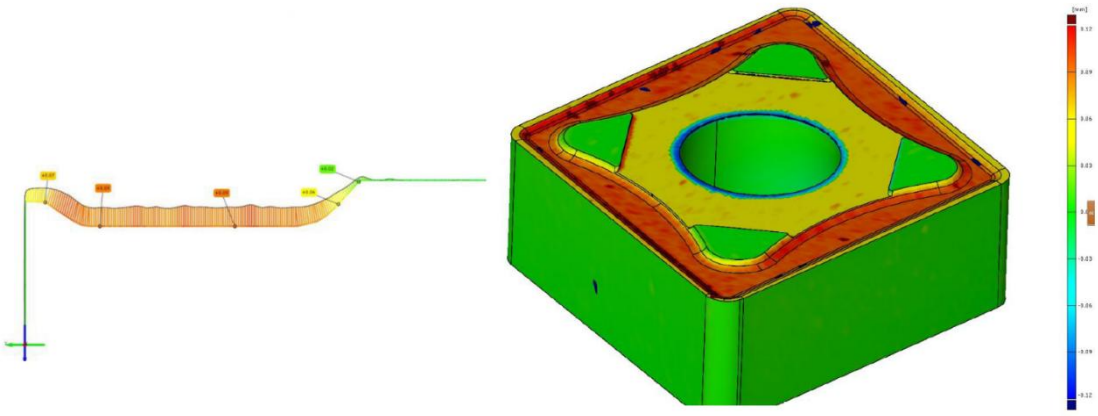

Fig. 4 The color map comparison of the actual surface and CAD model

Obr. 4 Farebná mapa porovnania povrchu s CAD modelom

3 Conclusion

The present work gives a description of the procedure implemented for manufacturing 3D compex structures on the surface of carbide material through a ytterbium pulsed fiber laser.

Even though the machine LASERTEC 80 Shape is not designed for cutting tools machining, ability to machine hard materials can be used to adjust the rake area of the cutting tools. Fig. 4 shows the color map of the form and cross-sectional deviation with the maximum deviation 0,09mm. In comparison to the dimensions of the insert is the deviation too large. Lower deviations and better result would be achievable by using of more thorough experiments and selecting of machining parameters. The results of the surface after machining obtained by using of emission scanning electron microscope shown in fig. 5 display a number of baked impurities, which could be eliminated by proper preparation and cleaning of the insert before LBM machining. There are several craters on the lower surface of the shaper. I tis necessary to remove these by sanding technology or to pay more attention to the setting of machinery parameters.

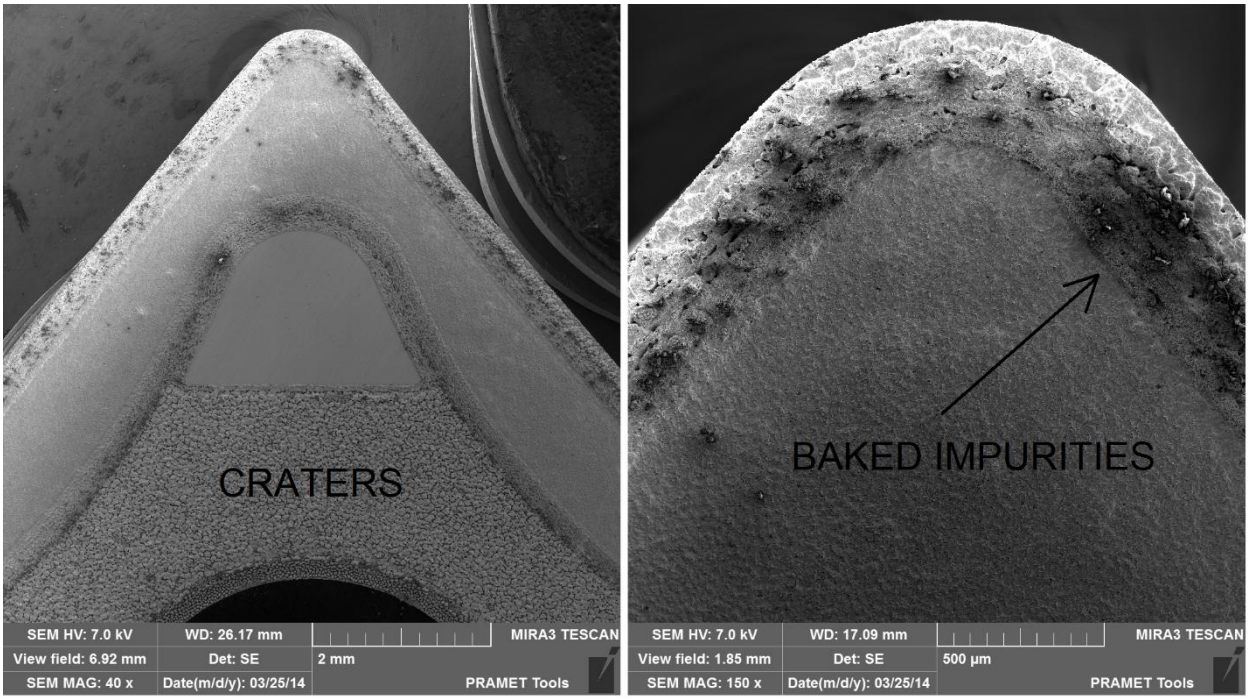

Fig. 5 The surface obtained by using emission scanning electron microscope
Obr. 5 Povrch získaný skenovacím elektrónovým mikroskopom

Acknowledgements and References

The article was written within the project VEGA 1/0477/14. Research of influence of selected characteristics of machining process on achieved quality of machined surface and problem free assembly using high Technologies.

This contribution was also elaborated with the support of Operational Project Research and Development of Centre of Excellence of Five-axis Machining, ITMS 26220120013, co-financed by the European Funds for Regional Development.

This contribution is elaborated by support of Operational Project Research and Development of Centre of Excellence of Five Axis Machining, ITMS 26220120013, co-financed by European Founds for Regional Development.

We are supporting of research activities in Slovakia/
Project is co-financed by sources of ES

[1] KARATAS, C., YILBAS, B.S., ALEEM, A., AHSAN, M. (2007). *Laser treatment of cemented carbide cutting tool*, Journal of Materials Processing Technology, Volume 183, Issues 2–3, Pages 234-240, ISSN 0924-0136.

[2] DA SILVA, W.M., SUAREZ, M.P., MACHADO, A.R., COSTA, H.L. (2013). *Effect of laser surface modification on the micro-abrasive wear resistance of coated cemented carbide tools*, Wear, Volume 302, Issues 1–2, Pages 1230-1240, ISSN 0043-1648.

[3] DENG, J., LIAN, Y., WU, Z., XING, Y., (2013). *Performance of femtosecond laser-textured cutting tools deposited with WS_2 solid lubricant coatings,* Surface and Coatings Technology, Volume 222, Pages 135-143, ISSN 0257-8972.

[4] NEVES, D., DINIZ, A.E., LIMA, M.S.F. (2013). *Microstructural analyses and wear behavior of the cemented carbide tools after laser surface treatment and PVD coating*, Applied Surface Science, Volume 282, Pages 680-688, ISSN 0169-4332.

[5] KURUC, M., NECPAL, M., PETERKA, J. (2014). *Machining of poly-crystalline cubic boron nitride by laser beam machining in terms of surface roughness*. Journal of Production Engineering Vol. 17, no. 1. s. 101--104. ISSN 1821-4932.

[6] SAUER GMBH, (2012). *Lasersoft 3D programming systém*, Software electronic help

[7] ŠUGÁR, P., NECPAL, M., ŠUGÁROVÁ, J., GÖRÖGOVÁ, I. (2014). *Microgeometry of laser machined surfaces. In Development in machining technology,* Scientific - Research Reports, Vol. 4. Cracow, Cracow University of Technology, s. 212--219. ISBN 978-83-7242-765-6.

Abstract

Článok: Využitie laserového obrábania pri výrobe prototypovej reznej platničky

Autori: Martin Necpal
Maroš Martinkovič

Pracovisko: Slovenská technická univerzita v Bratislave, Materiálovotechnologická fakulta so sídlom v Trnave, Paulínska 16, 917 24, Trnava

Kľúčové slová: Laserové Mikroobrábanie, Rezné nástroje, Tvarovač triesky

Laserové technológie a laserový lúč nachádza široké uplatnenie pri výrobe a úprave rezných nástrojov. V tejto práci je popísaná možnosť výroby tvarovača triesky reznej platničky pomocou laserového mikroobrábania. Schopnosť laserového mikroobrábania je možné využiť na textúrovanie povrchov, avšak ak odoberáme materiál vrstvu po vrstve je možné vytvárať aj komplexnejšie hlbšie reliéfy. Takáto možnosť laserového obrábania sa dá využiť na výrobu komplexného tvarovača triesky na reznej platničke. Pre príklad v tejto práci je použitá komerčná nepovlakovaná platnička CNMA120408 určená pre sústruženie. Pôvodná platnička mala rovnú čelnú plochu. Na základe teoretických znalostí a skúseností firmy PRAMET bol navrhnutý tvarovač. Celkový tvar bol namodelovaný v CAD softvéry. Na experiment

bol použitý stroj LASERTEC 80 Shape. Tento stroj Môže kontinuálne riadiť 5 os počas obrábania, ale pre tento príklad bola využitá trojosová funkcionalita stroja. Laserový zdroj je vláknový yterbiový s vlnovou dĺžkou 1 068unm pracujúci v impulznom režime o výkone max 100W. Priemer laserového lúča po zaostrení je približne 1 um. LBM technológia stroja LASERTEC 80 Shape je vhodná pre obrábanie ťažko obrábateľných materiálov. Na prípravu dát pre obrábací stroj bol použitý softvér LpsWin ktorý je určený priamo pre tento stroj. Výsledný tvar po obrobení bol porovnaný s modelom pomocou 3D skenera ATOS od firmy GOM. Výsledný povrch tvarovača bol kontrolovaný skenovacím elektrónovým mikroskopom. Vyrobený tvarovač triesky je s odchýlkou 0,09mm. Na tvarovači sa nachádza niekoľko zapečených nečistôt. Na spodnej strane tvarovača ostalo po obrobení niekoľko kráterov. LBM technológiu je možné využiť na výrobu komplexných tvarov a plôch napríklad tvarovača triesky reznej platničky. Je však potrebné klásť dôraz pri určovaní a výbere obrábacích parametrov. LBM technológia výroby tvarovača triesky pravdepodobne nenájde uplatnenie pri sériovej výrobe rezných platničiek, môžeme ju však využívať pre prípravu prototypových platničiek s rôznymi tvarovačmi, ktoré budú použité na experimenty pre posúdenie vhodnosti navrhnutého tvarovača.

Zpět