Solid State Phenomena
ISSN: 1662-9779, Vol. 304, pp 121-125
doi:10.4028/www.scientific.net/SSP.304.121
© 2020 Trans Tech Publications Ltd, Switzerland
Submitted: 2019-12-07
Accepted: 2019-12-21
Online: 2020-05-19

Using 2D/3D FEM Simulation to Determine Drawing Force in Cold Drawing of Steel Tubes with Straight Internal Rifling

Martin Necpal[1,a*], Mária Kapustová[2,b] and Maroš Martinkovič[3,c]

[1,2,3]Slovak University of Technology in Bratislava, Faculty of Material Science and Technology in Trnava, Institute of Production Technologies, Slovakia

[a]martin.necpal@stuba.sk, [b]maria.kapustova@stuba.sk, [c]maros.martinkovic@stuba.sk

Keywords: Multi-rifled Tube, Cold Drawing, Drawing Force, Finite Element Method

Abstract. The most comprehensive steel tube portfolio is used to produce all kinds of modern energy production and the corresponding auxiliary unit such as boilers and heat exchangers. Multi-rifled seamless steel tubes are distinguished by maximum pressure, heat resistance, strength and durability. Production of multi-rifled seamless steel tubes by cold draw process using multi-rifled mandrel is quite a new technology. Shape and dimension of the drawing tool depend on drawing tube reduction degree, i. e. on the original diameter of the initial tube and final diameter of the tube. The technology of drawing tubes is influenced by process parameters, dimensions of tools and cold forming process conditions. Optimization of the whole forming process naturally involve the FEM analyses and simulation. One of the most important information of the cold drawing process is the load stroke of the tools. The contribution is concerned at the usability of FEM simulation on an evaluation of cold draw forming process condition and prediction of load stroke of the forming tools. DEFORM 2D/3D FEM software is used to compare the result of the drawing force and to determine the appropriate methodology to set FEM simulation of cold forming.

Introduction

Internal multi-rifled tubes, i.e. tubes with inner grooving are used over the last few years in high-pressure heat exchangers, evaporator, condenser, and other devices. Usually, the inner tube surface can have a helical or straight rifling pattern, depending on customer requirements. The production of tubes usually consists of hot rolling and next to the multiple cold drawing with intermediate heat treatment while is the treatment required to retain the plasticity of the material. Usually, the final cold drawing operation procedure is used for grooving pattern on the inner surface of the tube [1]. The multi-rifled mender is used on final drawing pass and the material of the tube is formed a typical pattern on the inner shape. It is very important to fulfill all geometrical requirements of the rifling. The reliable results of the forming process affect these factors [2]:

- dimension and material formability of input feedstock,
- the technological parameter of forming (drawing velocity, method of lubrication and type of lubricant)
- the geometry of the forming tools (rifled mandrel)

There are several approaches on how to predict factors that influence of the forming process. A very expensive approach in industrial conditions is technological experiments via “trial-end-error”. Due to the need to reduce economic costs, experiments of the forming process are supplemented with analytical calculations or simulation models. Analytical calculations are reliably usable only for simple forming processes [3]. More complicated forming problems can be successfully solved using Finite Element “FEM” or Finite Volume “FVM” or Finite Difference “FDM” computational Methods. Taguchi method of experimental design can be used to plan the numerical simulation [4]. In case of simulation model design is necessary to verify this model. To validate the simulation model, neuron strain imaging measurements can be performed [5]. In some special cases of cold drawing process analysis, it is necessary to implement into a finite element application modified model, by means a develop Fortran subroutine [6]. Using FEM analyses to determine the initial tube size that gives the appropriate mechanical properties after drawing can be found in some works [7]. Not only

All rights reserved. No part of contents of this paper may be reproduced or transmitted in any form or by any means without the written permission of Trans Tech Publications Ltd, www.scientific.net. (Research Gate for subscription journals-11/02/24,21:06:15)

the dimension and geometry of the final tube are importing. Using macro-micro coupling finite element method analysis surface roughening of cod drawn can be found in the paper [8].

The main goal of this article is to develop 2D and 3D simulation model of tube cold draw forming process, and by using those models predict the load stroke of forming tools in particular process conditions. As the 3D simulation is more demanding on computational time and computer performance, the example focuses on the possibility of simplifying analysis using 2D simulation.

FEM

From the variational approach, the first-order variation of functional using the penalized form of incompressibility condition for rigid-plastic material can be written as follows:

$$\delta \prod = \int_V \bar{\sigma}\delta\bar{\varepsilon}\, dV + K \int_V \dot{\varepsilon}_V\, \delta\dot{\varepsilon}_V\, dV - \int_{SF} \bar{t}_i\, \delta V_i dS = 0 \quad (1)$$

Eq. (1) can be converted to non-linear algebraic equations by finite element discretization procedure. The solution of the non-linear simultaneous equations is obtained by Newton-Raphson method.

The tube material was considered as plastic, the hardening is assumed as isotropic, and yield function type is set as Von Mises. As the temperature stays lower in cold drawing, the forming material properties do not vary and can, therefore, be supposed to be independent of the temperature variation. The relationship of material between true stress-strain for the FE was obtained by simple tensile strength test is given by:

$$\sigma = 513\bar{\varepsilon}^{\,0.44} + 325 \;\; [MPa] \quad (2)$$

The forming tools, (mandrel and die) was considered as rigid bodies. The boundary condition that represents the speed of drawing is set to 9 m.min^{-1}. The friction coefficients between of the tube and die and the tube and mandrel under lubricated condition are determined by FE modeling by comparing measured and simulated plug, die and drawing forces as follows [9] and the friction shear was set 0.05421.

The dimension of the drawing tube is diameter D 28mm and wall thickness Wt of 4mm. Die approach angle is 8° and the final diameter is 25mm. Calibration length of die is 4mm. The mandrel cross-sectional shape and dimensions are shown in Fig 1.

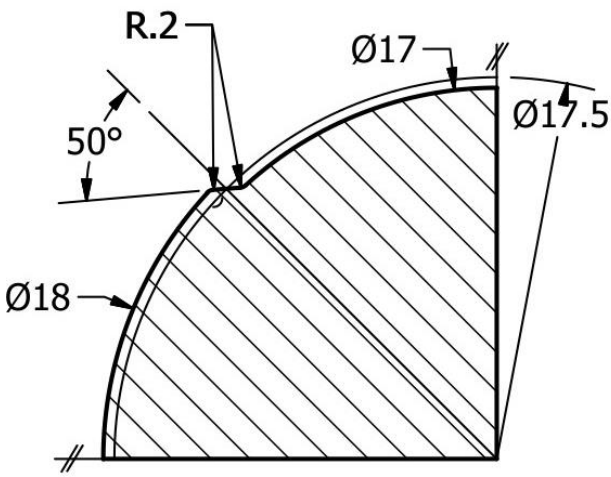

Fig. 1 Mandrel cross-sectional shape and dimensions

DEFORM 2D and 3D was used in this work. The 3D model of mandrel and die was used for FEM simulation. The simulation was simplified using the mirroring function, and a quarter of the cross-section of the pipe was used.

The tube domain was filed by tetrahedron mesh. The size of the mesh is closely related to the accuracy and number of mesh is related to the computation performance and calculation time. The tube domain was divided into subdomain for optimum meshing with the rib filling subdomain having the smallest elements. As a rib area is a part of high-stress domain with the smallest element length after every 50 steps the re-mesh procedure was implemented to continue the process and achieved the convergence. The section of the tube around rifling with visible mesh is illustrated in Fig. 2

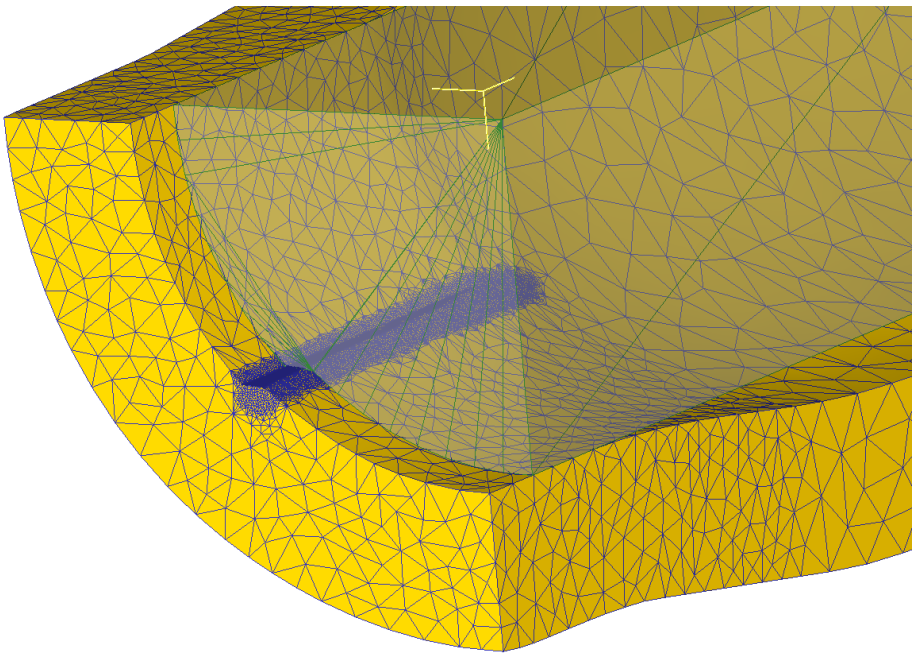

Fig. 2 The section of the tube around rifling with visible mesh

3D simulation was compared to two 2D simulations as follows. The 2D axisymmetric geometry configuration of FEM calculation has been set. One 2D simulation was done on with 17 mm of mandrel diameter, and the second one was done on with 18 mm of mandrel diameter. These values were selected based on the dimensions of the multi rifled mandrel Fig. 1. The geometry of the tube has meshed so that the eight elements are across the wall tube thickness. This mesh of tube domain is sufficient for accuracy and does not need to be re-mesh during the calculation. All the other values (material model, friction, etc.) were the same as in 3D simulation.

Tube cross-section area reduction is calculated by:

$$reduction = \frac{S_0 - S}{S_0} \cdot 100\ [\%] \tag{3}$$

Table 1 shows the calculated reduction by Eq. 3 for each simulation. Since the diameter of the die is the same when increasing the diameter of the mandrel the drawing tube reduction is increasing.

Table 1 Reduction of the drawing process

	reduction [%]
3D simulation	17
2D simulation mandrel diameter 17 mm	12,5
2D simulation mandrel diameter 18 mm	21,6

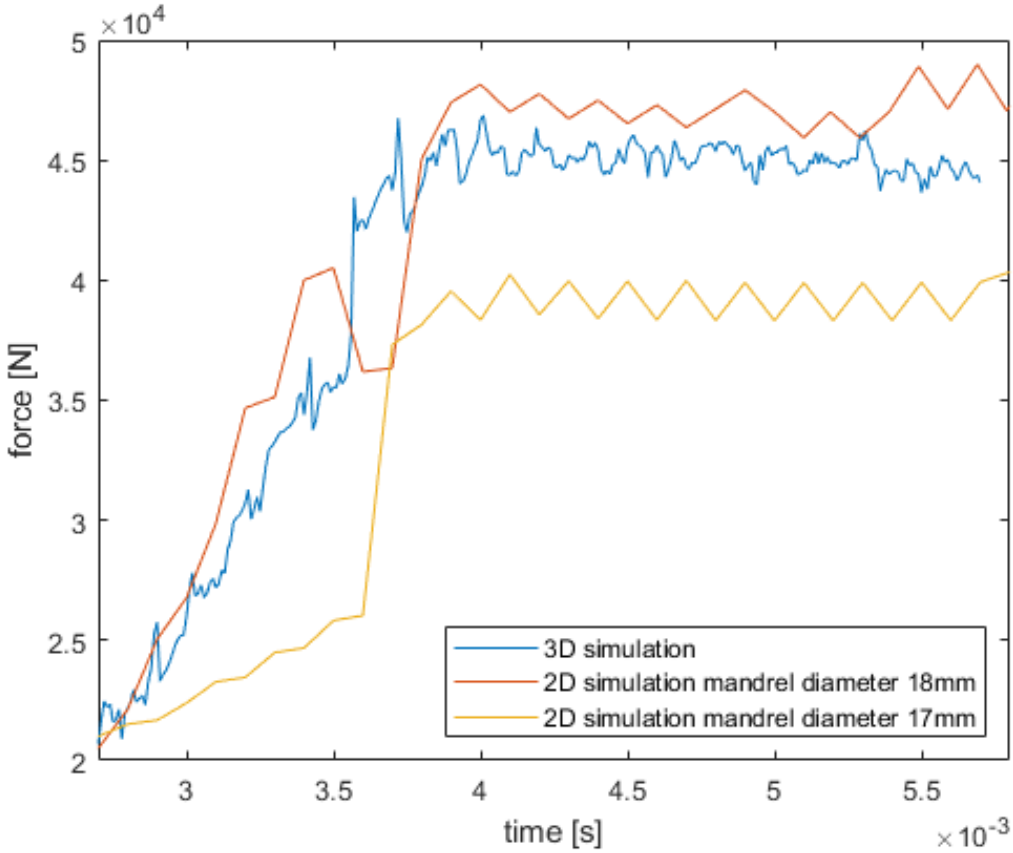

Fig. 3 Load-stroke of the Die

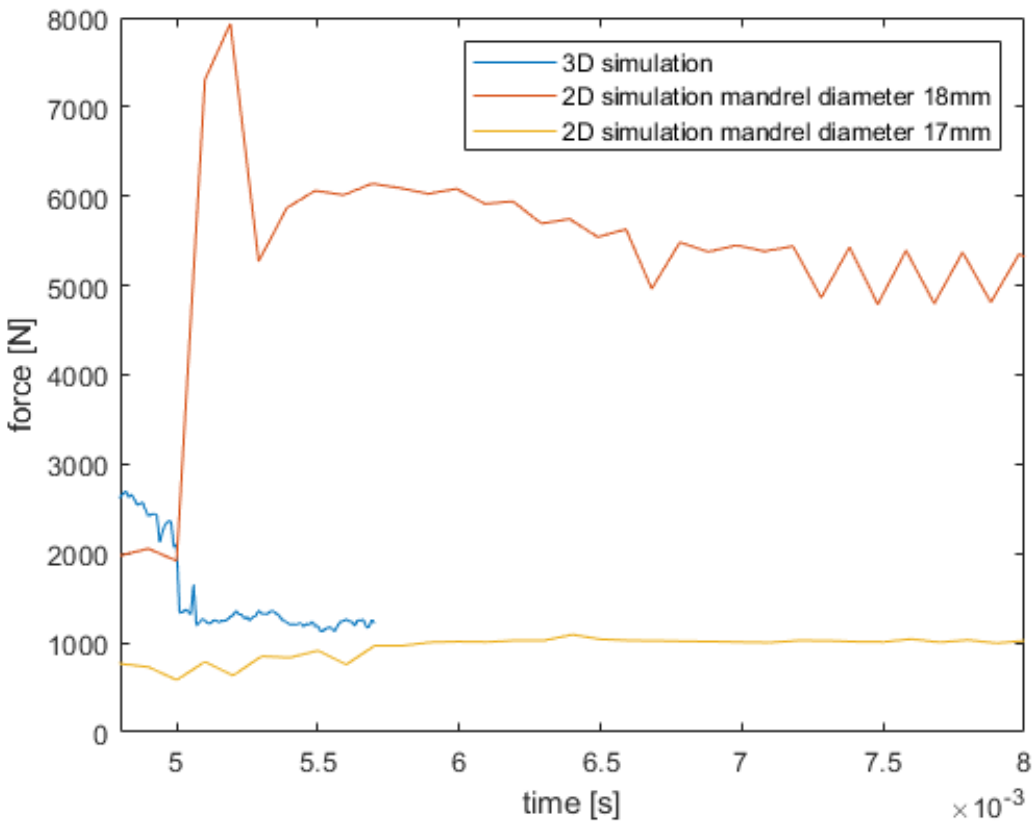

Fig. 4 Load-stroke of the mandrel

Summary

Table 2 shows the load-stroke forces of the tool in different simulation method.

Table 2 Load-Stroke of the tools

	Die Load Stroke [N]	Mandrel Load Stroke [N]
3D simulation	44 890	1 238
2D simulation mandrel diameter 17 mm	39 550	1 026
2D simulation mandrel diameter 18 mm	47 010	5 245

The values of the forces in table 2 were subtracted as the mean values of the steady-state zone of the tool forces in Fig. 3 and Fig. 4. From the graph, it is clearly visible that the 3D(blue) simulation has a step increment small of $1 \cdot 10^{-5}$ s, as opposed to 2D(red and yellow) simulation $1 \cdot 10^{-4}$ s. The reason is that the in case of 3D simulation there are smaller elements than in case of 2D simulation. Also, since 3D simulation requires more hardware performance and computing time, Total length of 3D simulation is smaller. Load stroke of the mandrel and die is clearly visible that the value of 3D draw force is between forces of 2D simulation using both diameters. For rough prediction of drawing forces, it is possible to use 2D simulation instead of 3D simulation which is more demanding on computer hardware and FEM simulation software.

Acknowledgments

This work was supported by the Slovak Research and Development Agency under contract No. APVV-15-0319 and by the VEGA Grant No. 1/0122/16 of the Grant Agency of the Slovak Republic Ministry of Education.

References

[1] Bella P, Durcik R, Ridzon M and Parilak L 2018 Numerical simulation of cold drawing of steel tubes with straight internal rifling *Procedia Manuf.* 15 320–6

[2] Bella P, Buček P, Ridzoň M, Mojžiš M and Parilák L 2017 Numerical simulation of multi-rifled tube drawing – finding proper feedstock dimensions and tool geometry *IOP Conf. Ser. Mater. Sci. Eng.* 179 12008

[3] Neves F O, Button S T, Caminaga C and Gentile F C 2005 Numerical and experimental analysis of tube drawing with fixed plug *J. Brazilian Soc. Mech. Sci. Eng.* 27 426–31

[4] Padmanabhan R, Oliveira M C, Alves J L and Menezes L F 2007 Influence of process parameters on the deep drawing of stainless steel *Finite Elem. Anal. Des.* 43 1062–7

[5] Palkowski H, Brück S, Pirling T and Carradò A 2013 Investigation on the residual stress state of drawn tubes by numerical simulation and neutron diffraction analysis *Materials (Basel).* 6 5118–30

[6] McAllen P J and Phelan P 2007 Numerical analysis of axisymmetric wire drawing by means of a coupled damage model *J. Mater. Process. Technol.* 183 210–8

[7] Boutenel F, Delhomme M, Velay V and Boman R Finite element modelling of cold drawing for high precision tubes 1–23

[8] Zhang L, Xu W, Long J and Lei Z 2015 Surface roughening analysis of cold drawn tube based on macro-micro coupling finite element method *J. Mater. Process. Technol.* 224 189–99

[9] Necpal M, Matinkovič M and Václav Š 2018 Determination of the Coefficient of Friction Under Cold Tube Drawing Using FEM Simulation and Drawing Force Measurement *Res. Pap. Fac. Mater. Sci. Technol. Slovak Univ. Technol.* 26 29-34