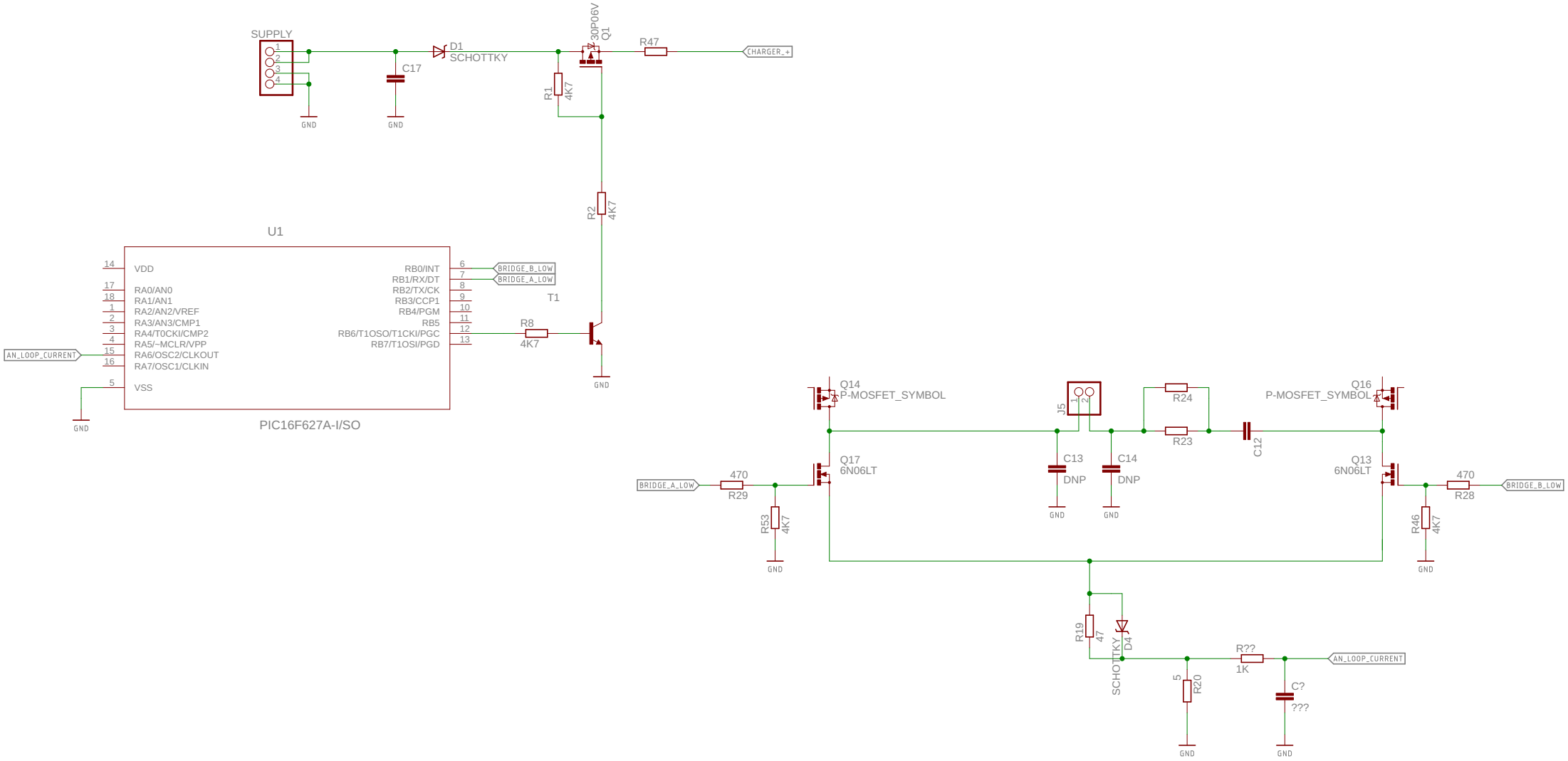
SUPPLY
1
2
3
4
GND
C17
GND
D1
SCHOTTKY
30P06V
Q1
R47
CHARGER_+
R1
4K7
R2
4K7
U1
14
VDD
17
RA0/AN0
18
RA1/AN1
1
RA2/AN2/VREF
2
RA3/AN3/CMP1
3
RA4/T0CKI/CMP2
4
RA5/~MCLR/VPP
15
RA6/OSC2/CLKOUT
16
RA7/OSC1/CLKIN
5
VSS
RB0/INT
RB1/RX/DT
RB2/TX/CK
RB3/CCP1
RB4/PGM
RB5
RB6/T1OSO/T1CKI/PGC
RB7/T1OSI/PGD
6
7
8
9
10
11
12
13
BRIDGE_B_LOW
BRIDGE_A_LOW
T1
R8
4K7
AN_LOOP_CURRENT
GND
PIC16F627A-I/SO
Q14
P-MOSFET_SYMBOL
J5
R24
R23
C12
Q16
P-MOSFET_SYMBOL
Q17
6N06LT
C13
DNP
C14
DNP
Q13
6N06LT
BRIDGE_A_LOW
470
R29
R53
4K7
470
R28
BRIDGE_B_LOW
R46
4K7
R19
47
D4
SCHOTTKY
R??
1K
AN_LOOP_CURRENT
5
R20
C?
???