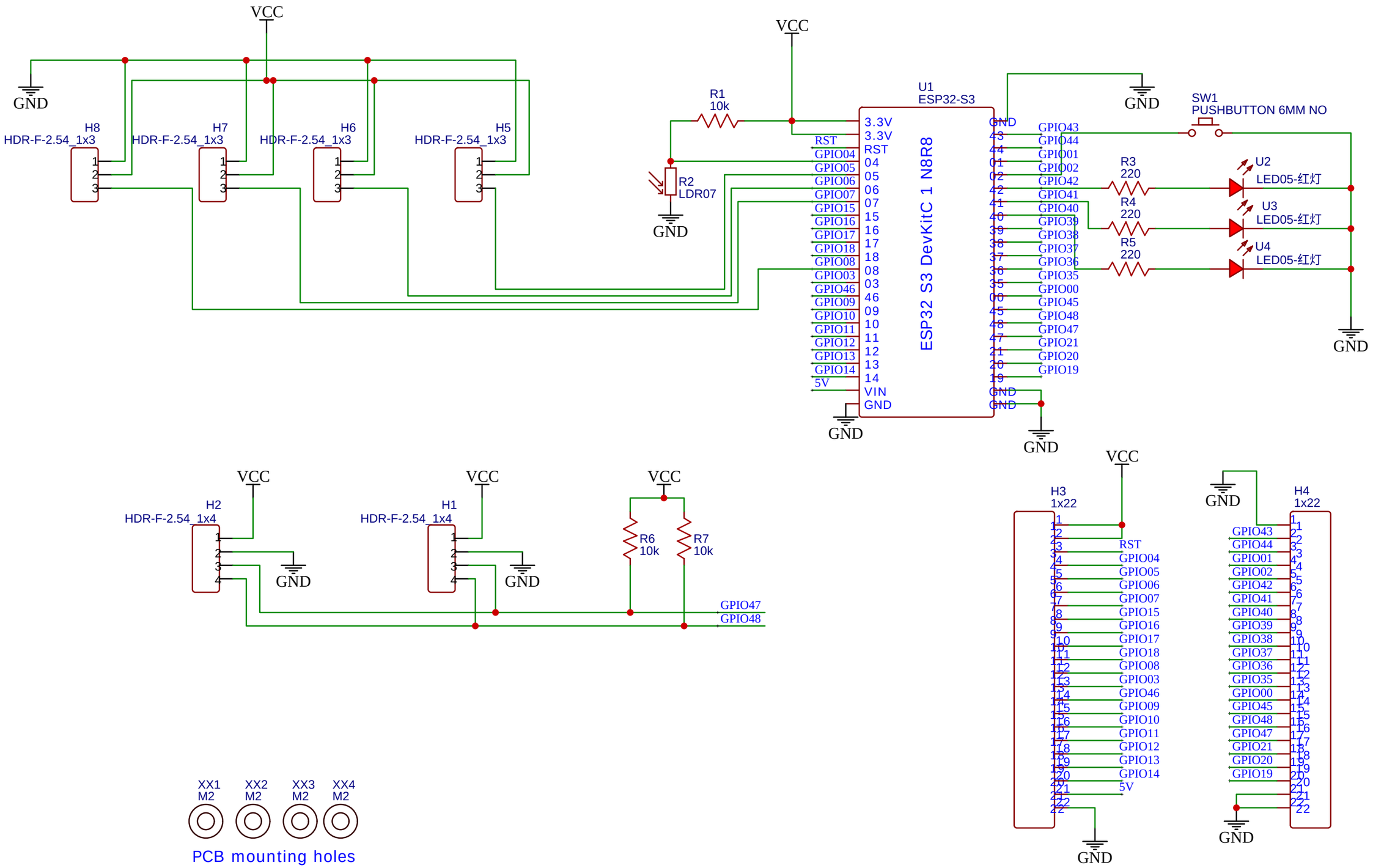

TITLE: 5.2 ESP32S3	REV: 1.0
Company: Akarawin Maiphun	Sheet: 1/1
Date: 2025-12-20	Drawn By: akarawin.m

EasyEDA

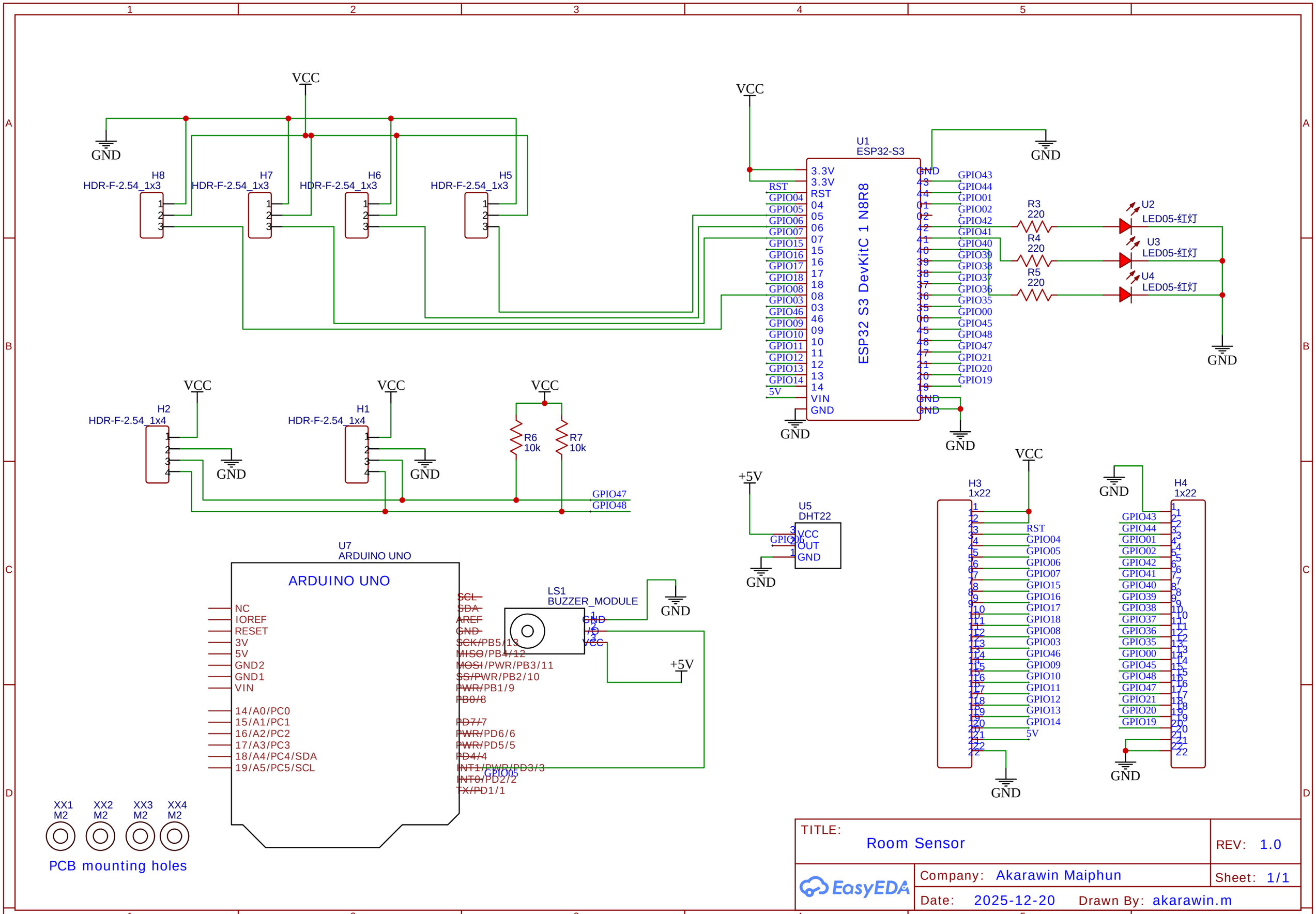
VCC
GND
H8
HDR-F-2.54_1x3
H7
HDR-F-2.54_1x3
H6
HDR-F-2.54_1x3
H5
HDR-F-2.54_1x3
U1
ESP32-S3
ESP32 S3 DevKitC 1 N8R8
3.3V
3.3V
RST
GPIO04
GPIO05
GPIO06
GPIO07
GPIO15
GPIO16
GPIO17
GPIO18
GPIO08
GPIO03
GPIO46
GPIO09
GPIO10
GPIO11
GPIO12
GPIO13
GPIO14
5V
VIN
GND
GND
GPIO43
GPIO44
GPIO01
GPIO02
GPIO42
GPIO41
GPIO40
GPIO39
GPIO38
GPIO37
GPIO36
GPIO35
GPIO00
GPIO45
GPIO48
GPIO47
GPIO21
GPIO20
GPIO19
GND
GND
R3
220
R4
220
R5
220
U2
LED05-红灯
U3
LED05-红灯
U4
LED05-红灯
GND
H2
HDR-F-2.54_1x4
H1
HDR-F-2.54_1x4
R6
10k
R7
10k
GPIO47
GPIO48
+5V
U5
DHT22
VCC
OUT
GND
GPIO05
H3
1x22
H4
1x22
U7
ARDUINO UNO
ARDUINO UNO
NC
IOREF
RESET
3V
5V
GND2
GND1
VIN
14/A0/PC0
15/A1/PC1
16/A2/PC2
17/A3/PC3
18/A4/PC4/SDA
19/A5/PC5/SCL
SCL
SDA
AREF
GND
SCK/PB5/13
MISO/PB4/12
MOSI/PWR/PB3/11
SS/PWR/PB2/10
PWR/PB1/9
PB0/8
PD7/7
PWR/PD6/6
PWR/PD5/5
PD4/4
INT1/PWR/PD3/3
INT0/PD2/2
TX/PD1/1
LS1
BUZZER_MODULE
XX1
M2
XX2
M2
XX3
M2
XX4
M2
PCB mounting holes
TITLE:
Room Sensor
REV: 1.0
Company: Akarawin Maiphun
Sheet: 1/1
Date: 2025-12-20
Drawn By: akarawin.m
EasyEDA

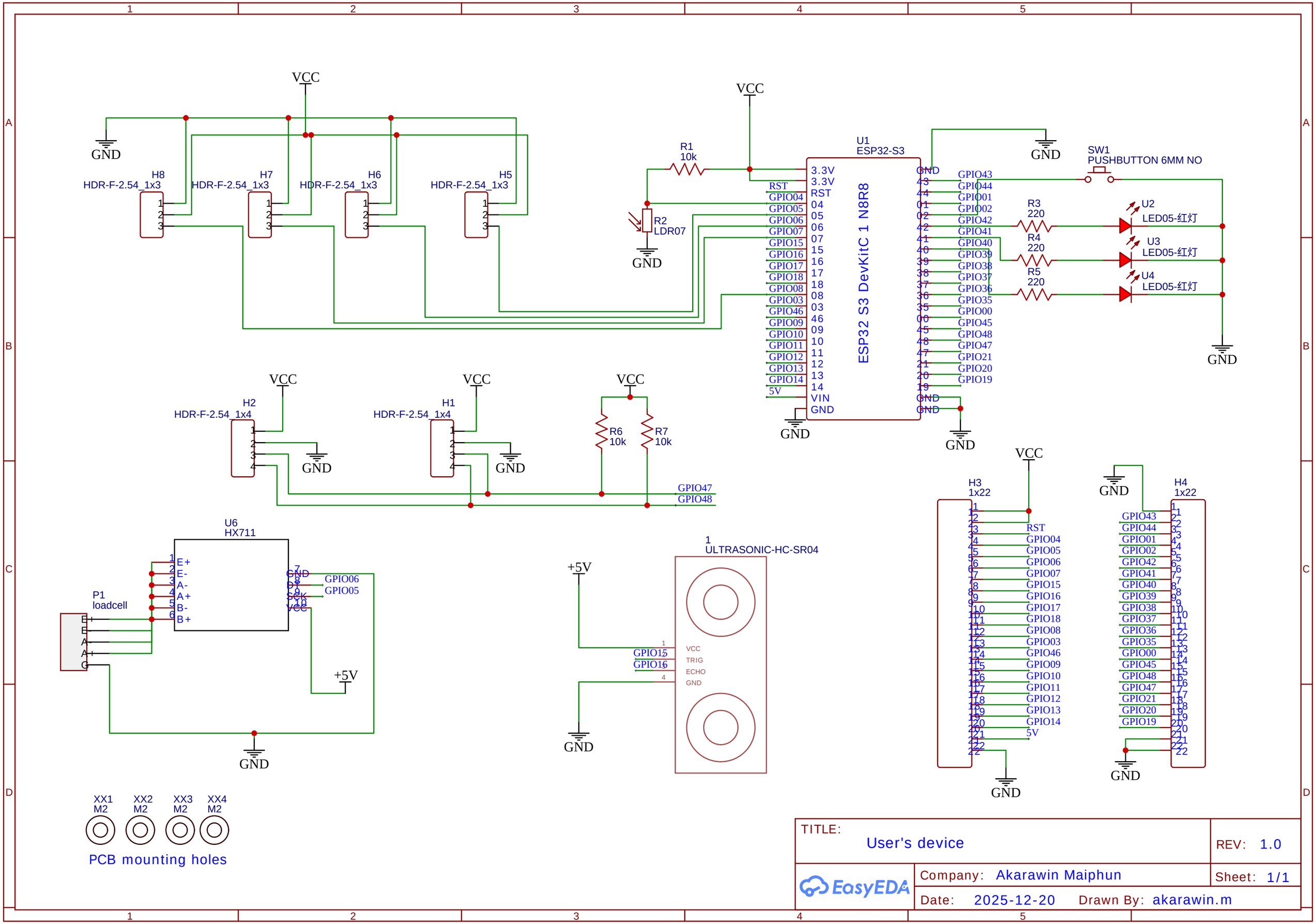

TITLE: User's device		REV: 1.0
EasyEDA	Company: Akarawin Maiphun	Sheet: 1/1
	Date: 2025-12-20 Drawn By: akarawin.m	