DEVS Modeling and Simulation

SYSC 5104 / SYSC 4906G

Smart Fridge Temperature Control System

Maryam Bazyari
February 2026

1. Overview

This project develops a hierarchical Discrete-Event System Specification (DEVS) model for a smart fridge temperature control system. The objective is to regulate the fridge temperature within an acceptable operating range using a hysteresis-based controller that issues ON/OFF commands to a compressor. Temperature evolves through event-driven updates generated by a periodic temperature sensor and compressor-status feedback.

The model is implemented in C++ using the Cadmium DEVS simulator and validated through atomic-level, coupled-subsystem, and full-system test cases. The implementation demonstrates closed-loop sensing-control-actuation behavior, hysteresis-based switching, and bounded temperature oscillation.

2. Conceptual Model

2.1 Problem Description

A refrigerator must maintain its internal temperature within a safe operating range for food storage. In practice, fridge temperature increases when cooling is OFF and decreases when cooling is ON. A controller must decide when to activate or deactivate cooling while avoiding rapid switching (chattering).

The goal of this project is to model a simplified smart fridge control loop as a DEVS system in which state changes occur at discrete event times driven by sensor outputs and control/actuator feedback.

2.2 Modeling Objectives

The main modeling objectives are:

- Regulate fridge temperature within a desired operating band.
- Use hysteresis control to reduce switching chatter.
- Model temperature evolution as event-driven updates (without continuous ODEs).
- Provide a clear hierarchical DEVS structure (atomic → coupled → top coupled) compatible with Cadmium.
- Support incremental testing from atomic models to full-system integration.
- Produce execution traces that can be analyzed to validate DEVS behavior.

2.3 Hierarchical Structure

The system is organized in three levels:

- **Top coupled model:** SmartFridgeSystem (SFS)
- **Coupled subsystem:** FridgeControlService (FCS)
- **Atomic models:** TempSensor (TS), Controller (CTRL), Compressor (COMP)

This decomposition supports modular design, easier debugging, and incremental verification.

2.4 Component Behavior (Informal)

TempSensor (TS)

- Stores the current temperature estimate.
- Periodically outputs temperature readings.
- Temperature increases when cooling is OFF.
- Temperature decreases when cooling is ON.
- Can optionally receive a disturbance input (e.g., door-open effect).

Controller (CTRL)

- Receives temperature readings from TS.
- Applies hysteresis logic with two thresholds:
    - If temperature is above the upper threshold, command ON.
    - If temperature is below the lower threshold, command OFF.

    - Otherwise, no command is sent (hold region).
- Can optionally generate an alarm if temperature exceeds a safety threshold.
- May suppress redundant repeated commands.

Compressor (COMP)

- Receives ON/OFF commands from CTRL.
- Updates cooling mode accordingly.
- Outputs cooling status (COOLING_ON / COOLING_OFF) to TS as feedback.

2.5 Assumptions and Scope

- Temperature is represented in °C.
- Thermal behavior is simplified as fixed increments per sensor sample.
- Sensor readings are ideal (no measurement noise or delay beyond DEVS event timing).
- Compressor is modeled as a two-state actuator (ON/OFF only).
- The model is event-driven and discrete-time in behavior (through periodic sensor events), not continuous-time.
- Disturbance and alarm behaviors are optional extensions and may be included as placeholders in the baseline implementation.

3. Formal DEVS Specification

Atomic models follow the classic DEVS form:

M = ⟨X, S, Y, δ ext, δ int, λ , ta⟩

Coupled models follow the DEVS coupled structure:

N = ⟨X, Y, D, {Mi}, EIC, EOC, IC, Select⟩

3.1 Atomic Models

3.1.1 TempSensor (TS)

Purpose

Maintains an internal estimate of fridge temperature and periodically emits temperature

readings. It reacts to compressor status feedback (cooling ON/OFF) and optionally disturbance inputs.

Inputs (X)

- `cooling_status_in : CoolingStatus`
- `disturbance_in : Disturbance` (optional)

Outputs (Y)

- `temp_out : Temperature`

State (S)

- T (real): current temperature
- `cooling_on` (boolean): whether cooling is currently active
- `pending_disturbance` (real or flag): optional disturbance effect
- timing/phase state for periodic behavior

Time advance (ta)

- Periodic sampling interval Δ `ts` (e.g., 1 time unit)

External transition (δ ext)

- On `cooling_status_in`:
  - set `cooling_on = true` if `COOLING_ON`
  - set `cooling_on = false` if `COOLING_OFF`
- On `disturbance_in`:
  - store or accumulate disturbance effect (optional)

Internal transition (δ int)

- If `cooling_on = false` → `T := T + rwarm`
- If `cooling_on = true` → `T := T - rcool`
- Apply pending disturbance if any
- Schedule next periodic output after Δ `ts`

Output function (λ)

- Output `temp_out = T` at each scheduled internal event

3.1.2 Controller (CTRL)

Purpose

Applies hysteresis control to maintain fridge temperature within a band and optionally produces an alarm output.

Inputs (X)

- `temp_in : Temperature`

Outputs (Y)

- `cmd_out : CompressorCommand` (`CMD_ON / CMD_OFF`)
- `alarm_out : Alarm` (optional)

State (S)

- `last_temp` (real)
- `last_cmd` (`CMD_ON / CMD_OFF / unknown`)
- `command_pending` (bool)
- `pending_cmd` (`CMD_ON / CMD_OFF`)
- `alarm_pending` (bool)
- `pending_alarm` (optional)
- phase/mode (`passive` or `output`)
- σ (time advance state)

Time advance (ta)

- `ta = 0` when an output is pending
- `ta =` ∞ otherwise (passive/reactive behavior)

External transition (δ ext)

- Receive `temp_in`
- Update `last_temp`
- Evaluate hysteresis:
  - If `T > Thigh` and `last_cmd != CMD_ON` → `pending_cmd = CMD_ON`
  - If `T < Tlow` and `last_cmd != CMD_OFF` → `pending_cmd = CMD_OFF`

    - Else no command
- Optionally evaluate alarm threshold
- If any output is pending → schedule immediate output (`ta = 0`)

Internal transition (δ int)

- Finalize command memory (update `last_cmd` if a command was emitted)
- Clear pending outputs
- Return to passive mode (`ta = ∞`)

Output function (λ)

- Emit `cmd_out` if `command_pending = true`
- Emit `alarm_out` if `alarm_pending = true`

3.1.3 Compressor (COMP)

Purpose
Models the compressor actuator. It receives ON/OFF commands and emits cooling status feedback.

Inputs (X)

- `cmd_in : CompressorCommand` (`CMD_ON / CMD_OFF`)

Outputs (Y)

- `status_out : CoolingStatus` (`COOLING_ON / COOLING_OFF`)

State (S)

- `mode ∈ {COOLING_ON, COOLING_OFF}`
- `output_pending` (bool)
- phase/mode (`passive` or `output`)
- σ (time advance state)

Time advance (ta)

- `ta = 0` when `output_pending = true`

- `ta = ∞` otherwise

External transition (δ ext)

- On `cmd_in = CMD_ON`:
  - `mode := COOLING_ON`
  - `output_pending := true`
- On `cmd_in = CMD_OFF`:
  - `mode := COOLING_OFF`
  - `output_pending := true`
- Schedule immediate output (`ta = 0`)

Internal transition (δ int)

- `output_pending := false`
- Return to passive mode (`ta = ∞`)

Output function (λ)

- Emit `status_out = mode` when output is pending

3.2 Transition Pseudocode

3.2.1 TempSensor Pseudocode

```
On internal transition every sample_time:
    if cooling_on == true:
        T := T - cooling_rate
    else:
        T := T + warming_rate

    if pending_disturbance exists:
        T := T + pending_disturbance
        clear/update pending_disturbance

    schedule next internal transition after sample_time

Output function:
    emit temp_out(T)
```

```
On external transition:
    if cooling_status_in received:
        set cooling_on based on status
    if disturbance_in received:
        store disturbance effect
```

3.2.2 Controller Pseudocode

```
On external transition with temp_in(T):
    last_temp := T
    command_pending := false
    alarm_pending := false

    if T > T_high:
        if last_cmd != CMD_ON:
            pending_cmd := CMD_ON
            command_pending := true
    else if T < T_low:
        if last_cmd != CMD_OFF:
            pending_cmd := CMD_OFF
            command_pending := true

    if alarm_enabled and T > T_safe:
        pending_alarm := UNSAFE
        alarm_pending := true

    if command_pending or alarm_pending:
        sigma := 0
    else:
        sigma := INF

Output function:
    if command_pending: emit cmd_out(pending_cmd)
    if alarm_pending: emit alarm_out(pending_alarm)

On internal transition:
    if command_pending: last_cmd := pending_cmd
    clear pending outputs
    sigma := INF
```

3.2.3 Compressor Pseudocode

```
On external transition with cmd_in(c):
    if c == CMD_ON:
        mode := COOLING_ON
    else if c == CMD_OFF:
        mode := COOLING_OFF

    output_pending := true
    sigma := 0

Output function:
    if output_pending:
        emit status_out(mode)

On internal transition:
    output_pending := false
    sigma := INF
```

3.3 Formal Coupled Model Definitions

3.3.1 Coupled Model: FridgeControlService (FCS)

FridgeControlService encapsulates the smart fridge control loop (sensor, controller, and compressor).

Definition
FridgeControlService = ⟨X, Y, D, {Mi}, EIC, EOC, IC, Select⟩

X (external inputs)

- `disturbance_in` (optional)

Y (external outputs)

- `alarm_out` (optional)
- `temp_out` (recommended for observation)
- `status_out` (recommended for observation)

D (components)

- `{TempSensor, Controller, Compressor}`

Atomic models included

- `M_TempSensor`, `M_Controller`, `M_Compressor`

EIC (external input couplings)

- `(disturbance_in → TempSensor.disturbance_in)` [optional]

IC (internal couplings)

- `(TempSensor.temp_out → Controller.temp_in)`
- `(Controller.cmd_out → Compressor.cmd_in)`
- `(Compressor.status_out → TempSensor.cooling_status_in)`

EOC (external output couplings)

- `(Controller.alarm_out → alarm_out)` [optional]
- `(TempSensor.temp_out → temp_out)` [recommended]
- `(Compressor.status_out → status_out)` [recommended]

Select

- A fixed priority may be used if needed by the simulator; otherwise, default Cadmium behavior is acceptable.

3.3.2 Top Coupled Model: SmartFridgeSystem (SFS)

SmartFridgeSystem is the top-level coupled model used to run integrated experiments.

Definition
SmartFridgeSystem = ⟨X, Y, D, {Mi}, EIC, EOC, IC, Select⟩

X (external inputs)

- `disturbance_in` (optional top-level disturbance event)

Y (external outputs)

- `alarm_out` (optional)
- `temp_out` (recommended)
- `status_out` (recommended)

D (components)

- `{FridgeControlService}`

Coupled model included

- `M_FridgeControlService`

EIC (external input couplings)

- `(disturbance_in → FridgeControlService.disturbance_in)` [optional]

IC (internal couplings)

- none (single subsystem at top level)

EOC (external output couplings)

- `(FridgeControlService.alarm_out → alarm_out)` [optional]
- `(FridgeControlService.temp_out → temp_out)` [recommended]
- `(FridgeControlService.status_out → status_out)` [recommended]

Select

- Default simulator tie-breaking policy is acceptable for the baseline system.

4. DEVS-Graph Diagrams

The following DEVS-Graph diagrams are included to document the hierarchical structure and state-based logic of the model.

4.1 Included Figures

- **Figure 1:** SmartFridgeSystem (top coupled model)

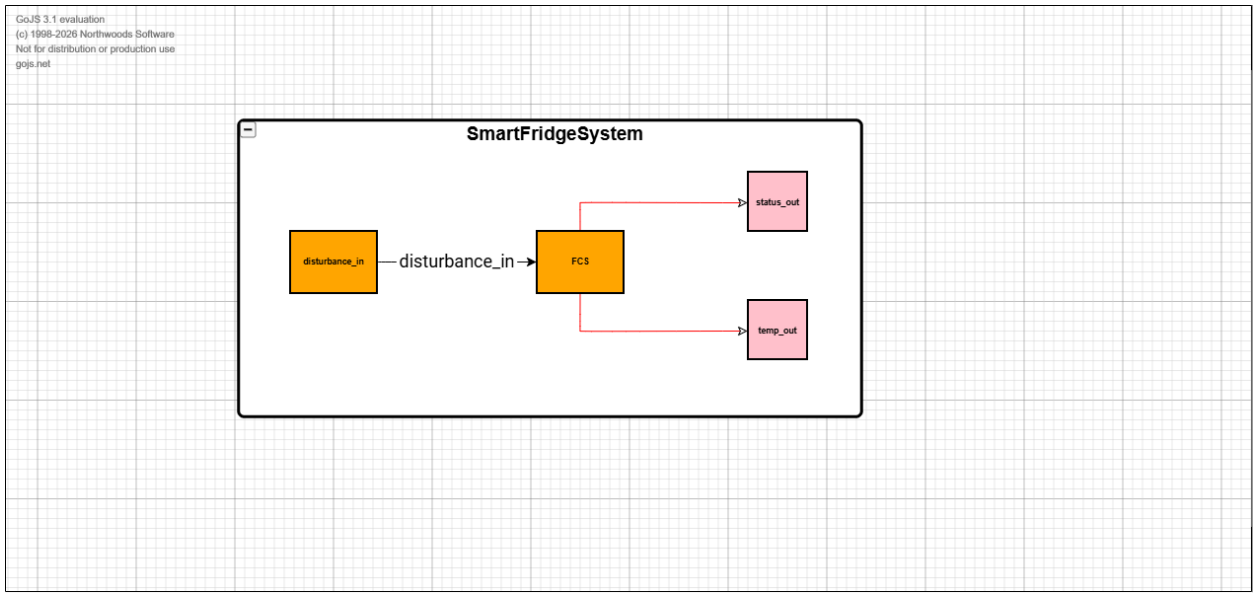

- **Figure 2:** FridgeControlService (coupled subsystem)

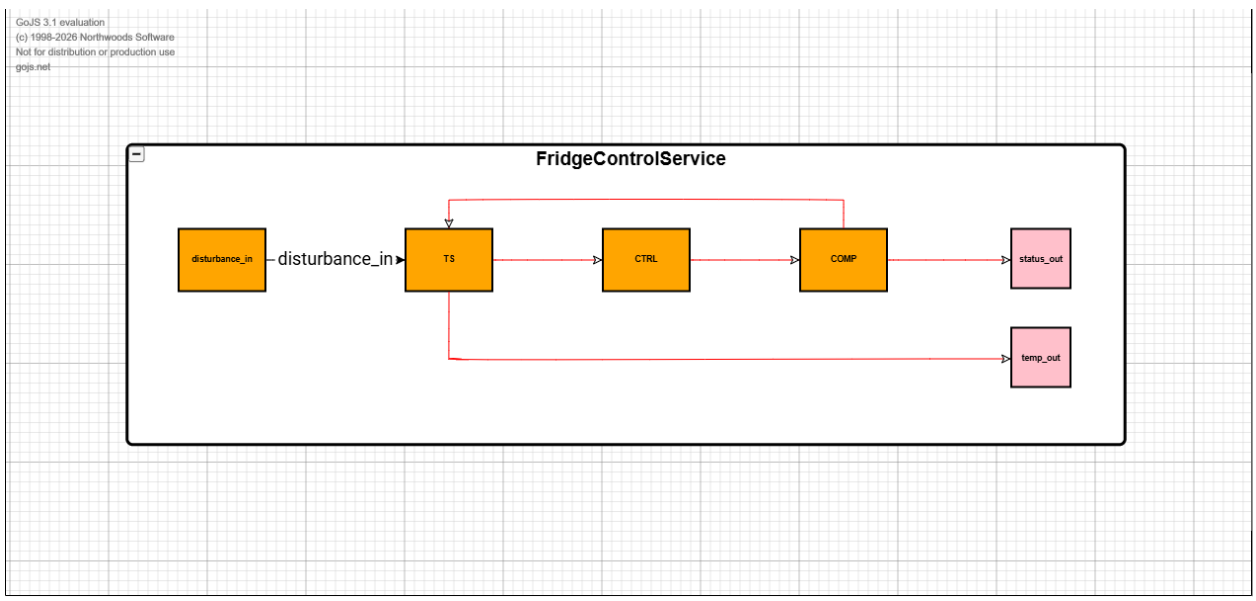

- **Figure 3:** Controller (CTRL) atomic/state-machine diagram

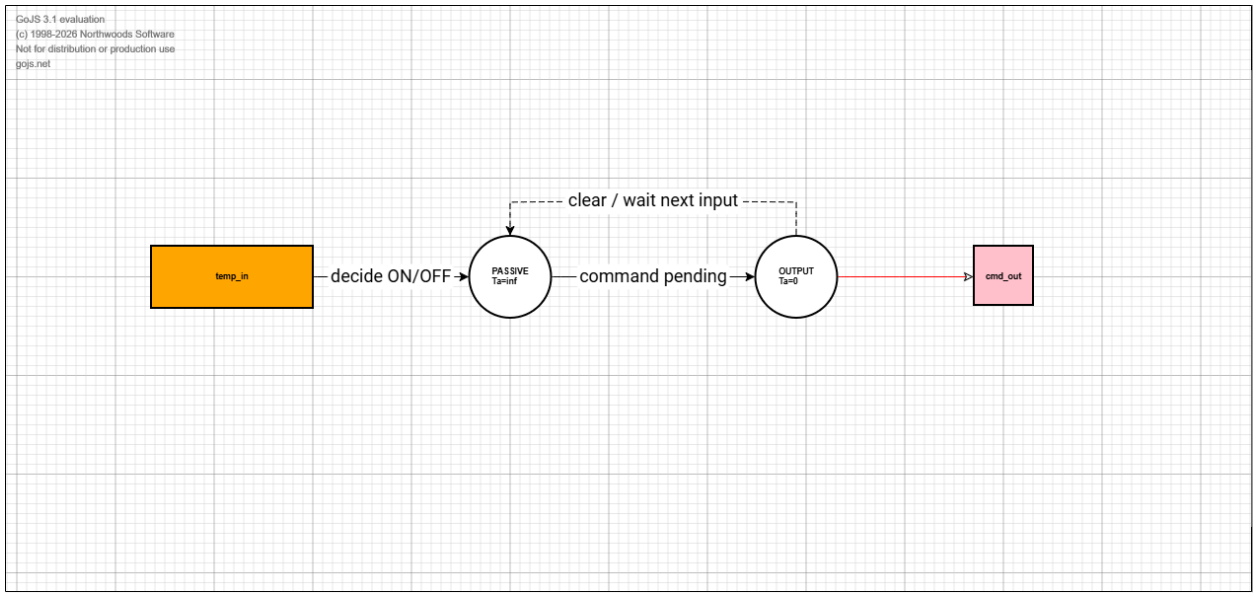

- **Figure 4:** Compressor (COMP) atomic/state-machine diagram

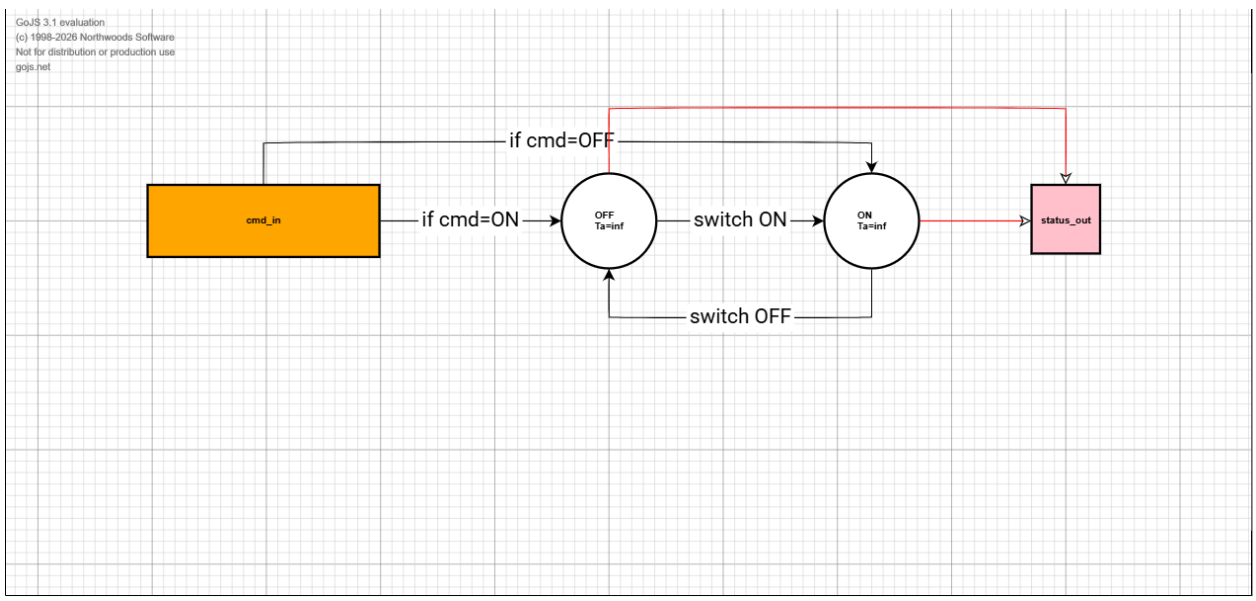

- **Figure 5:** TempSensor (TS) atomic/state-machine diagram

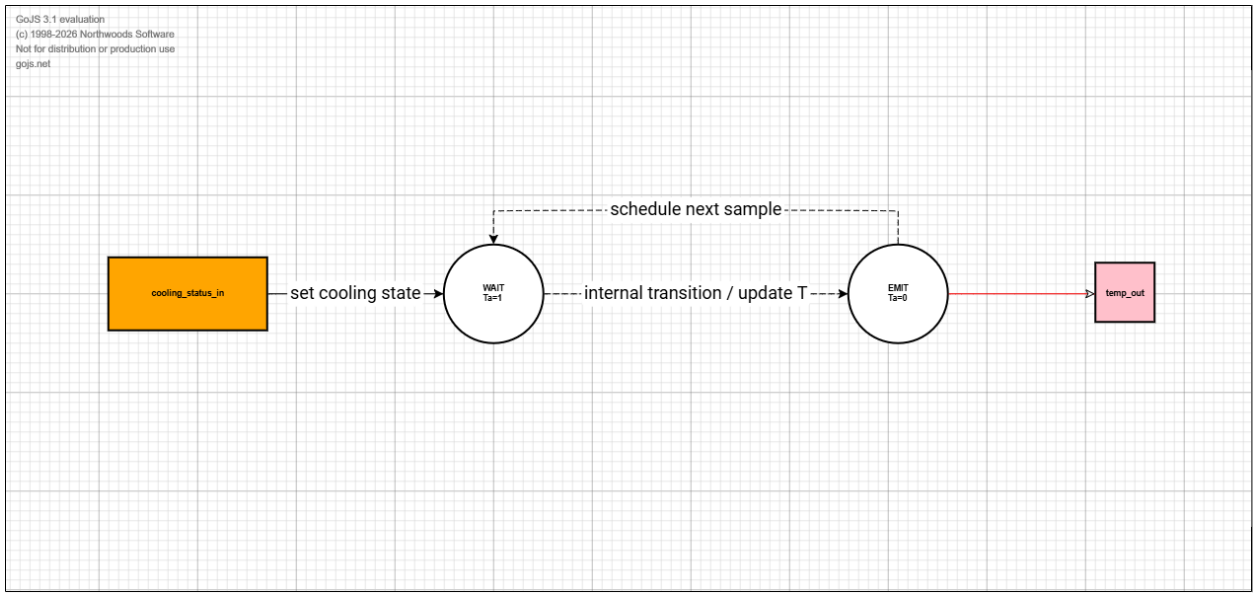

4.2 Relation to the Formal Model

The coupled-model diagrams correspond to the formal coupled definitions in Section 3.3, while the atomic diagrams represent the state-based realization of the transition logic and pseudocode described in Sections 3.1 and 3.2.

5. Implementation in Cadmium

Each atomic model was implemented in C++ as a Cadmium dynamic atomic model using the standard DEVS functions:

- `internal_transition`
- `external_transition`
- `confluence_transition`
- `output`
- `time_advance`

The coupled models were then composed using Cadmium dynamic coupled definitions consistent with the couplings listed in Section 3.3.

5.1 Implemented Files (Core)

- `message_types.hpp`

- `TempSensor.hpp`
- `Controller.hpp`
- `Compressor.hpp`
- `main.cpp`
- `CMakeLists.txt`

5.2 Implementation Notes

The implementation uses explicit state structs with flags such as:

- `command_pending`
- `alarm_pending`
- `output_pending`
- `has_last_cmd`

Zero-time outputs are implemented through pending-output flags and `time_advance = 0` where needed, especially in `Controller` and `Compressor`.

`NDTime` is used as the simulation time type, and the code was adjusted during debugging to ensure compatibility with Cadmium/DESTimes.

6. Test Cases and Validation

This section presents reproducible test cases, expected behavior, and validation outcomes for atomic and integrated model execution.

6.1 Atomic-Level Test Cases

6.1.1 TempSensor Periodic Warming (TS-01)

Input/Setup
Initialize `TempSensor` with cooling OFF and temperature `T0`. Run for multiple sample intervals with no cooling-status change.

Expected Behavior
At each sampling event, `TempSensor` emits `temp_out`, and temperature increases by the warming increment.

Validation Criterion

The execution trace shows periodic `temp_out` messages and monotonic temperature increase while `cooling_on = false`.

6.1.2 TempSensor Cooling Response (TS-02)

Input/Setup

Send `cooling_status_in = COOLING_ON` to `TempSensor` and continue simulation.

Expected Behavior

Subsequent periodic outputs show decreasing temperature.

Validation Criterion

The execution trace shows temperature decreasing at each sample while `cooling_on = true`.

6.1.3 Controller Hysteresis ON/OFF Decisions (CTRL-01 / CTRL-02 / CTRL-03)

Input/Setup

Provide representative temperature inputs to `Controller`:

- above upper threshold,
- within hysteresis band,
- below lower threshold.

Expected Behavior

- Above upper threshold → `CMD_ON`
- Within hysteresis band → no command
- Below lower threshold → `CMD_OFF`

Validation Criterion

Commands are generated only at threshold crossings, with no repeated switching inside the hysteresis band.

6.1.4 Compressor Command-to-Status Mapping (COMP-01 / COMP-02)

Input/Setup
Send `CMD_ON` and then `CMD_OFF` to `Compressor`.

Expected Behavior

- `CMD_ON` produces `status_out = COOLING_ON`
- `CMD_OFF` produces `status_out = COOLING_OFF`

Validation Criterion
The execution trace shows correct status outputs aligned with command inputs.

6.2 System-Level Test Cases (Integrated Control Loop)

6.2.1 Experiment E1 – Warm Startup and Closed-Loop Cooling

Input/Setup

- Initial temperature approximately `8°C`
- Compressor initially OFF
- No external disturbance

Expected Behavior

- TS outputs a high temperature reading
- CTRL issues `CMD_ON`
- COMP switches to `COOLING_ON`
- TS temperature decreases over subsequent samples
- CTRL issues `CMD_OFF` when temperature falls below the lower threshold
- Temperature rises again while cooling is OFF
- The cycle repeats with bounded oscillation

Validation Criterion
The execution log shows a complete ON/OFF control cycle with feedback and bounded temperature variation.

6.2.2 Experiment E2 – Hysteresis Behavior Verification

Input/Setup
Run the integrated model long enough to observe at least one full ON/OFF cycle.

Expected Behavior

- Compressor remains ON across multiple samples while temperature decreases
- Compressor remains OFF across multiple samples while temperature increases
- Switching occurs near distinct upper/lower thresholds
- Redundant commands are not emitted repeatedly at every sample

Validation Criterion
The trace confirms hysteresis behavior and reduced switching chatter.

6.2.3 Experiment E3 – Atomic Execution Printout Validation

Input/Setup
Run the integrated model and inspect the printed state traces for each atomic model.

Expected Behavior
State printouts include meaningful variables for:

- TS (temperature, cooling flag, disturbance state)
- CTRL (pending flags, last command, last temperature)
- COMP (mode, output pending)

Validation Criterion
The output log contains interpretable atomic state traces consistent with DEVS message flow and transitions.

6.3 Observed Results from the Executed Simulation

A successful integrated run was obtained. The execution trace shows:

- Initial temperature around **8.0°C**

- Cooling initially **OFF**
- Temperature rising to **8.4°C**
- Controller issuing **CMD_ON**
- Compressor switching to **COOLING_ON**
- Temperature decreasing in steps (e.g., **8.4 → 7.8 → 7.2 → ... → 1.8 → 1.2**)
- Controller issuing **CMD_OFF**
- Compressor switching to **COOLING_OFF**
- Temperature increasing again in steps (e.g., **1.2 → 1.6 → 2.0 → ... → 6.0 → 6.4**)
- Controller issuing **CMD_ON** again
- Beginning of the next cycle

These results confirm correct closed-loop feedback and hysteresis-based regulation.

6.4 Validation Summary

- **E1 (Warm startup integrated loop):** Pass
- **E2 (Hysteresis switching behavior):** Pass
- **E3 (Atomic execution printout validation):** Pass

Overall, the baseline integrated model operates as intended.

7. Results Analysis and Discussion

7.1 System Behavior

The implemented model exhibits the expected refrigerator control behavior:

- While cooling is OFF, temperature increases at a fixed warming rate.
- Once the upper threshold is exceeded, the controller issues `CMD_ON`.
- The compressor turns cooling ON and reports status feedback.
- While cooling is ON, temperature decreases at a fixed cooling rate.
- Once the lower threshold is crossed, the controller issues `CMD_OFF`.
- The cycle repeats, resulting in bounded oscillation.

This is the intended behavior of a hysteresis-controlled regulation system.

7.2 Strengths of the Model

- Clear modular decomposition (sensor, controller, compressor)
- Strong correspondence between DEVS formalization and Cadmium implementation
- Traceable execution through atomic model state printouts
- Supports incremental testing and future extensions
- Demonstrates hysteresis-based switching behavior clearly

7.3 Limitations

- Thermal dynamics are simplified (fixed increments instead of physics-based heat transfer)
- Disturbance behavior is optional and not fully exercised in the baseline run
- No automatic CSV/plot export in the baseline implementation (trace-based validation is used)

7.4 Possible Extensions

- Add explicit disturbance input scenarios (e.g., door-open events)
- Add alarm generation and corresponding validation experiments
- Export simulation traces to CSV and generate plots
- Compare different thresholds and sample times
- Add sensor noise or delays for robustness testing

8. Changes from the Initial Specification During Implementation

During implementation and debugging, several practical refinements were made to improve correctness, portability, and reproducibility of the model.

8.1 Code-Level State Representation

The implementation uses explicit state flags such as `command_pending`, `alarm_pending`, `output_pending`, and `has_last_cmd` instead of relying only on abstract tuple descriptions. This made the Cadmium implementation clearer and easier to debug while preserving the original DEVS behavior.

8.2 Zero-Time Output Handling

The Controller and Compressor models use pending-output flags and immediate scheduling (`ta = 0`) to represent zero-time DEVS outputs correctly in Cadmium. This was necessary to ensure that command and status messages were emitted at the correct event times.

8.3 NDTime Compatibility Adjustments

During implementation, time handling was adjusted to remain compatible with `NDTime`, and build-related changes were introduced to ensure successful execution with Cadmium and DESTimes. In the final version, the repository was reorganized so that required dependencies were included locally under an `external/` directory. This avoided machine-specific path dependencies and improved portability of the project.

8.4 Repository and Execution Refinements

The execution workflow was revised from a machine-specific local build process to a self-contained clone-and-run structure. A shell script was added to:

- verify the required folders,
- prepare Boost headers if needed,
- compile the model,
- run the simulation, and
- save the execution log automatically.

This refinement was made so that the repository could be cloned into a clean folder and executed directly, as required by the assignment instructions.

8.5 Parameter Selection for Visible Hysteresis Cycles

Baseline values for initial temperature, warming rate, cooling rate, and hysteresis thresholds were chosen so that the integrated simulation would show clear and stable ON/OFF cycles in the execution trace. This made the validation behavior easier to observe and analyze.

These refinements preserve the conceptual design while improving implementation correctness, simulator compatibility, and repository reproducibility.

9. Reproducibility: Build and Run Procedure

The repository was updated so that the project can be reproduced directly from a clean clone. Instead of relying on external machine-specific Cadmium, DESTimes, and Boost paths, the required dependencies are included in the repository under the `external/` directory. The provided execution script automatically prepares Boost headers if needed, builds the project, runs the simulation, and stores the output log. This final structure was validated successfully using a clean clone of the GitHub repository.

9.1 Build and Run Steps

1. Clone the repository into a clean folder.
2. Enter the repository directory.
3. Make the shell script executable.
4. Run the provided script.
5. The script prepares Boost headers if needed, compiles the simulator, runs the model, and stores the simulation log.

9.2 Example Commands

```
git clone https://github.com/maryambazyari/smart-fridge-temperature-control-devs.git
cd smart-fridge-temperature-control-devs
chmod +x scripts/run_simulation.sh
./scripts/run_simulation.sh
```

9.3 Output

The simulation output is saved in:

`cadmium_generated/simulation_results/simulation_result.txt`

The output log contains execution traces for the atomic models and confirms successful integrated closed-loop execution.

9.4 Reproducibility Result

A clean-clone validation was performed successfully. The repository was cloned into a new folder, the provided shell script was executed, Boost headers were prepared

automatically, the project compiled successfully, and the simulation completed with the output log saved in the expected location. This confirms that the repository now satisfies the clone-and-run requirement for submission.

10.Conclusion

This project developed a DEVS-based smart fridge temperature control system and implemented it in Cadmium. The final model includes a conceptual system definition, formal atomic and coupled DEVS specifications, transition pseudocode, hierarchical structure, and a tested executable implementation.

The simulation results confirm correct hysteresis-based ON/OFF regulation and bounded temperature behavior. The model is modular and can be extended with disturbances, alarms, and richer thermal dynamics in future work.

11. References

- Course lecture notes on DEVS modeling and simulation
- Cadmium DEVS simulator documentation and examples
- DEVS-Graph tool documentation and resources