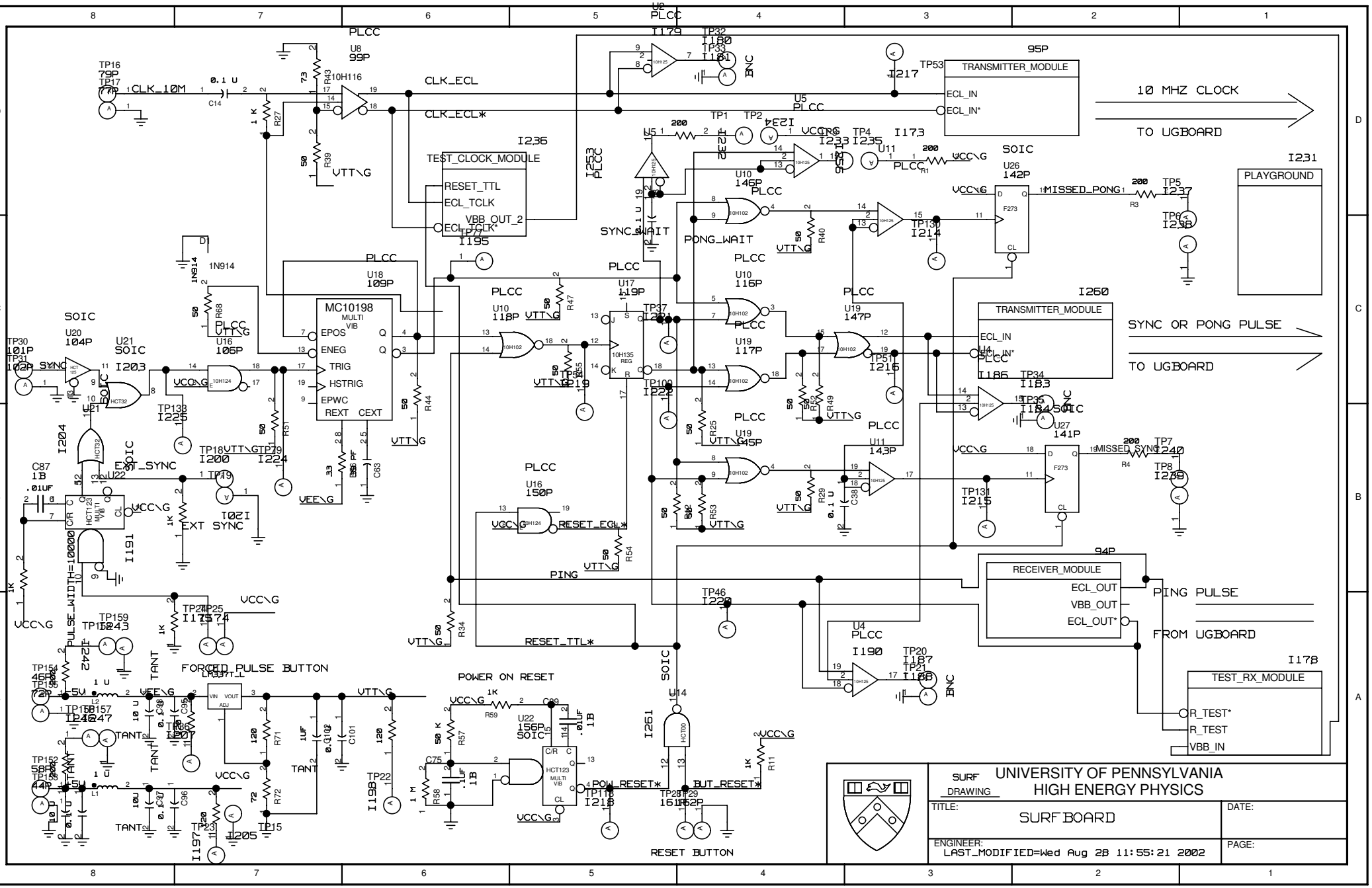
TRANSMITTER_MODULE
ECL_IN
ECL_IN*
10 MHZ CLOCK
TO UGBOARD
TEST_CLOCK_MODULE
RESET_TTL
ECL_TCLK
VBB_OUT_2
ECL_TCLK*
PLAYGROUND
MC10198
MULTI VIB
EPOS
ENEG
TRIG
HSTRIG
EPWC
REXT
CEXT
SYNC OR PONG PULSE
TO UGBOARD
RECEIVER_MODULE
ECL_OUT
VBB_OUT
ECL_OUT*
PING PULSE
FROM UGBOARD
TEST_RX_MODULE
R_TEST*
R_TEST
VBB_IN
FORCED PULSE BUTTON
POWER ON RESET
RESET BUTTON
UNIVERSITY OF PENNSYLVANIA
HIGH ENERGY PHYSICS
SURF DRAWING
TITLE:
SURF BOARD
DATE:
ENGINEER:
LAST_MODIFIED=Wed Aug 28 11:55:21 2002
PAGE:

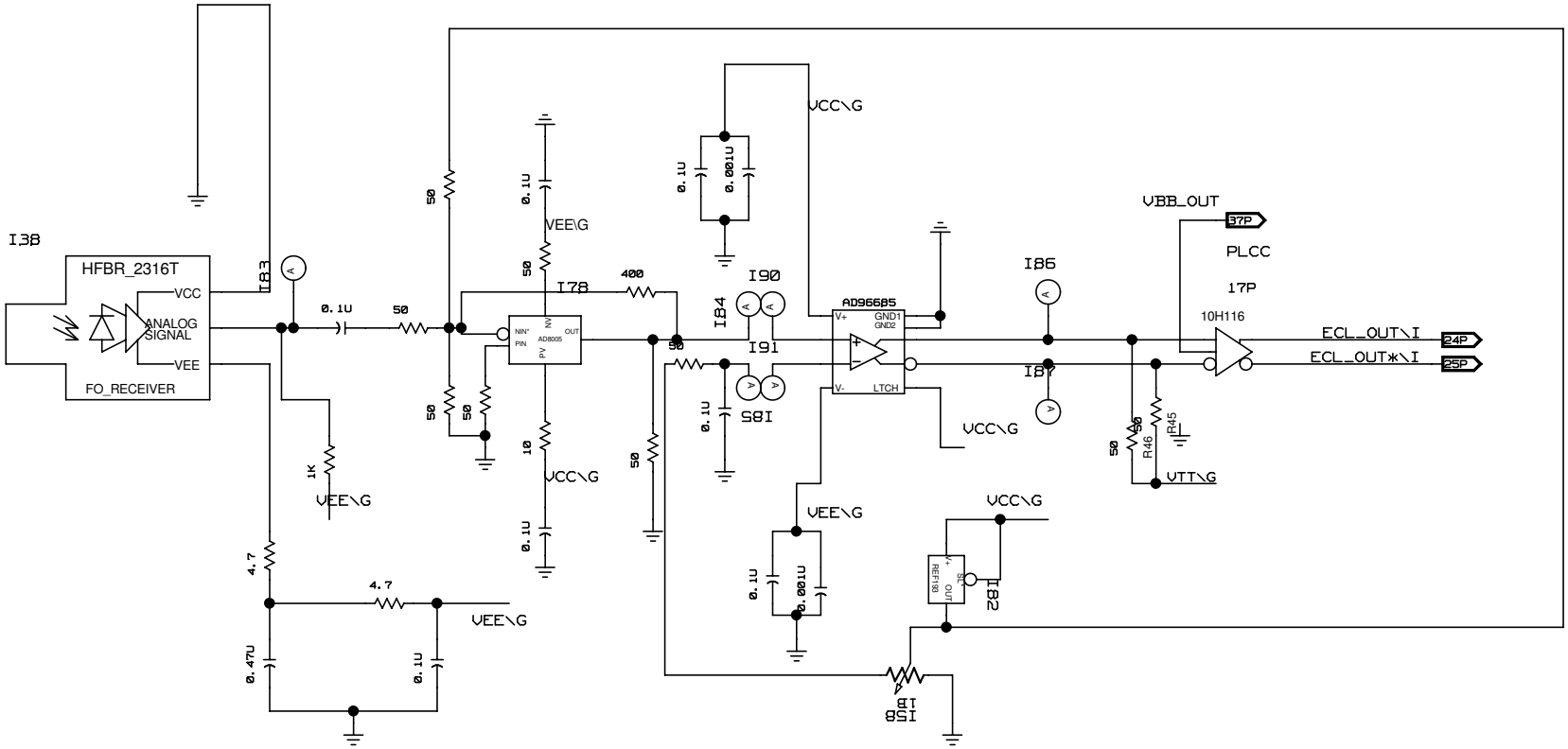

REC DRAWING	UNIVERSITY OF PENNSYLVANIA HIGH ENERGY PHYSICS	
TITLE:	RECEIVER_MODULE	DATE:
ENGINEER:	LAST_MODIFIED=Tue Oct 1 10:29:11 2002	PAGE:

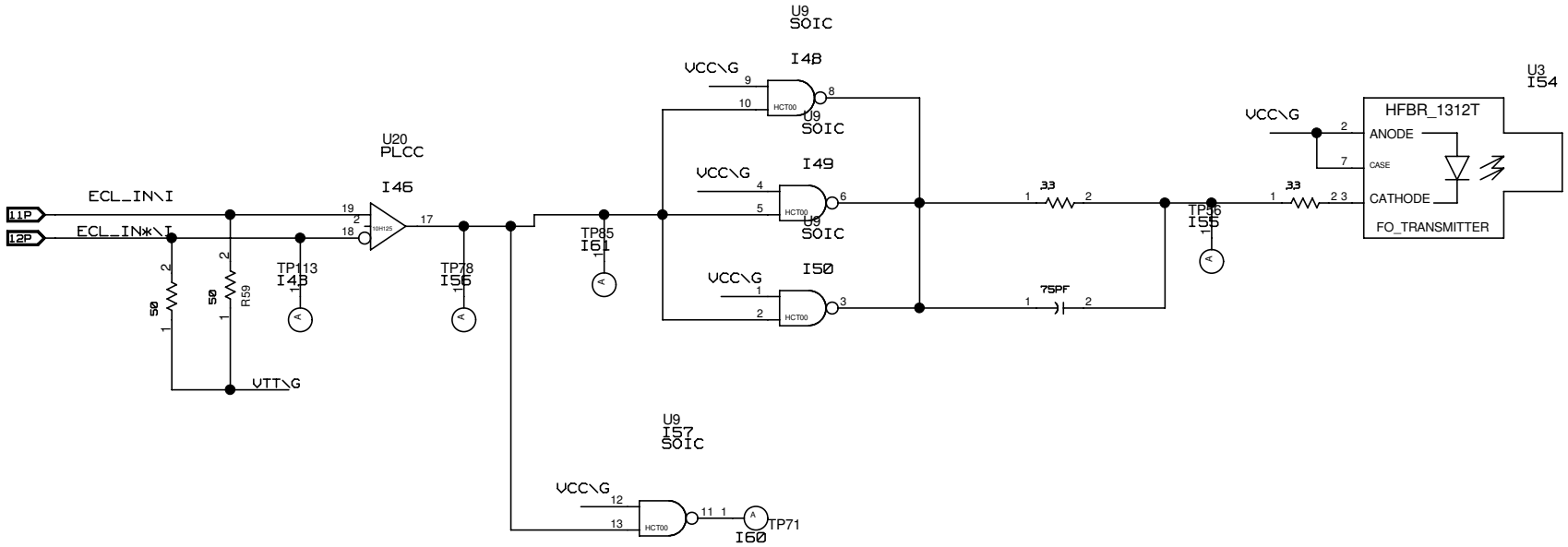

TRANS
DRAWING

UNIVERSITY OF PENNSYLVANIA
HIGH ENERGY PHYSICS

TITLE: TRANSMITTER_MODULE

DATE:

ENGINEER: LAST_MODIFIED=Fri Sep 13 15:17:29 2002

PAGE:

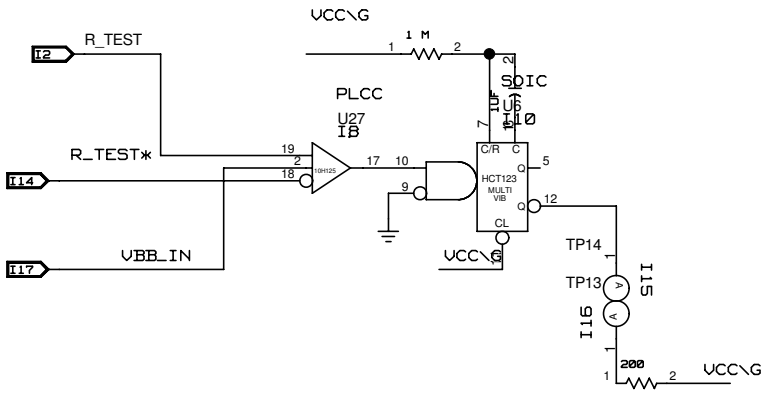

UNIVERSITY OF PENNSYLVANIA
HIGH ENERGY PHYSICS

TITLE: TEST RX MODULE

DATE:

ENGINEER:

PAGE:

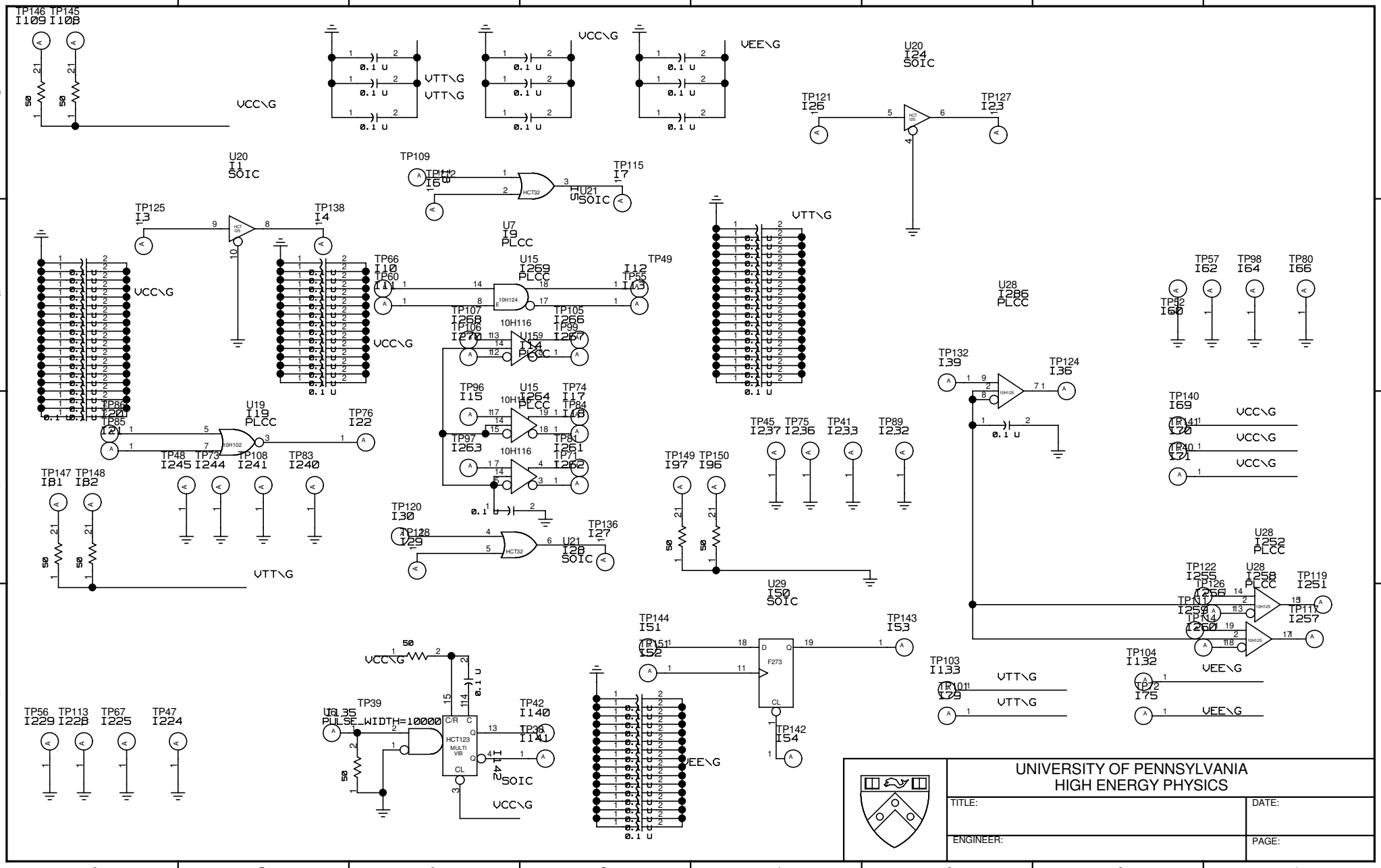
UNIVERSITY OF PENNSYLVANIA
HIGH ENERGY PHYSICS
TITLE:
DATE:
ENGINEER:
PAGE:
VCC\G
VTT\G
VEE\G
U20
I24
SOIC
U20
I1
SOIC
U21
I6
SOIC
U21
I28
SOIC
U7
I9
PLCC
U15
I269
PLCC
U15
I264
PLCC
U28
I286
PLCC
U28
I252
PLCC
U28
I258
PLCC
U19
I19
PLCC
U29
I50
SOIC
HCT32
HCT123
MULTI VIB
F273
10H125
10H116
10H124
10H102
PULSE_WIDTH=10000
0.1 u
50

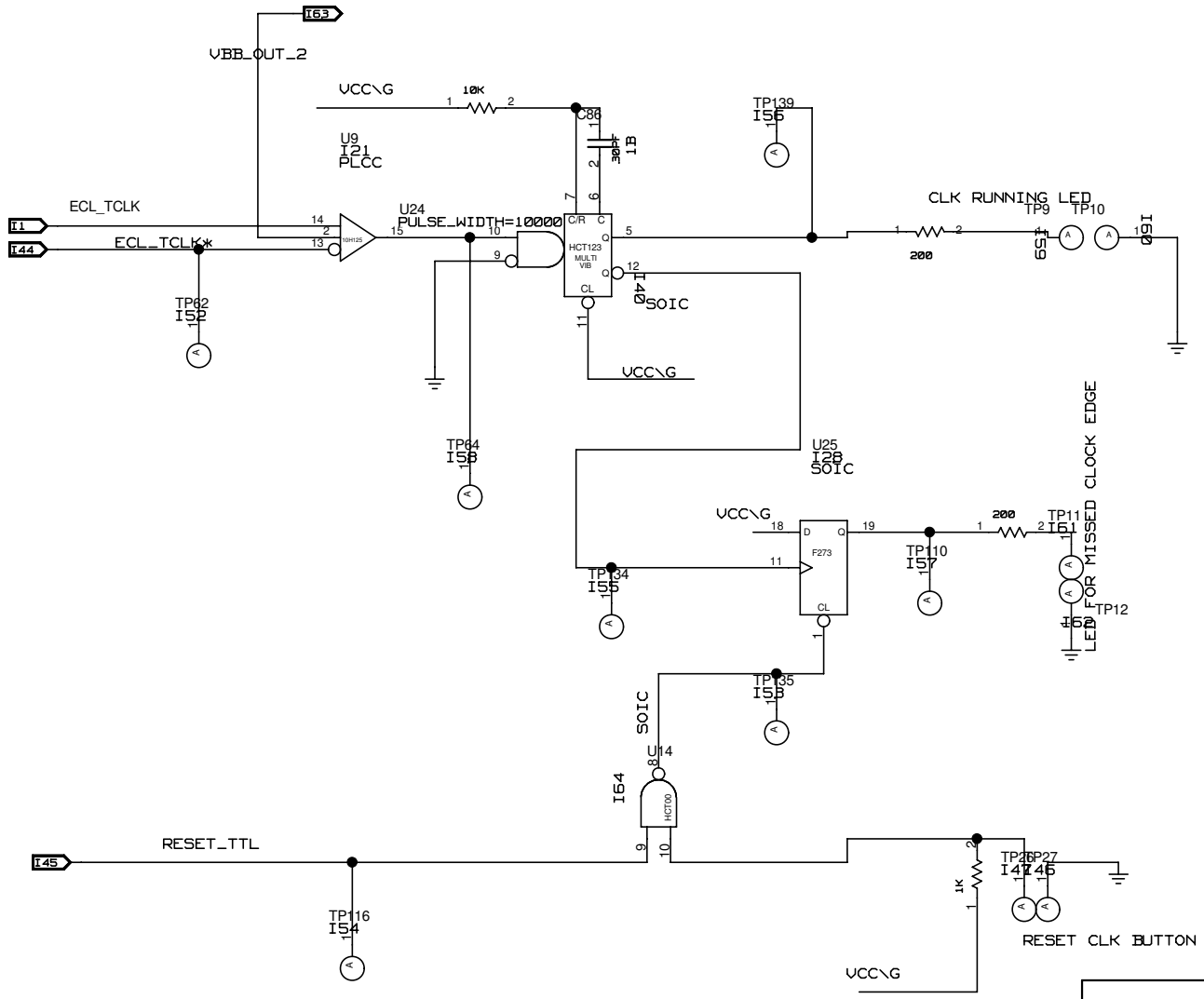

UNIVERSITY OF PENNSYLVANIA
HIGH ENERGY PHYSICS

TITLE: TEST CLOCK MODULE

DATE:

ENGINEER:

PAGE: