DRAWING

ROOT

LAST_MODIFIED=Mon Dec 2 10:55:03 1996

CRATE LEVEL TRIGGER CARD

ROOT

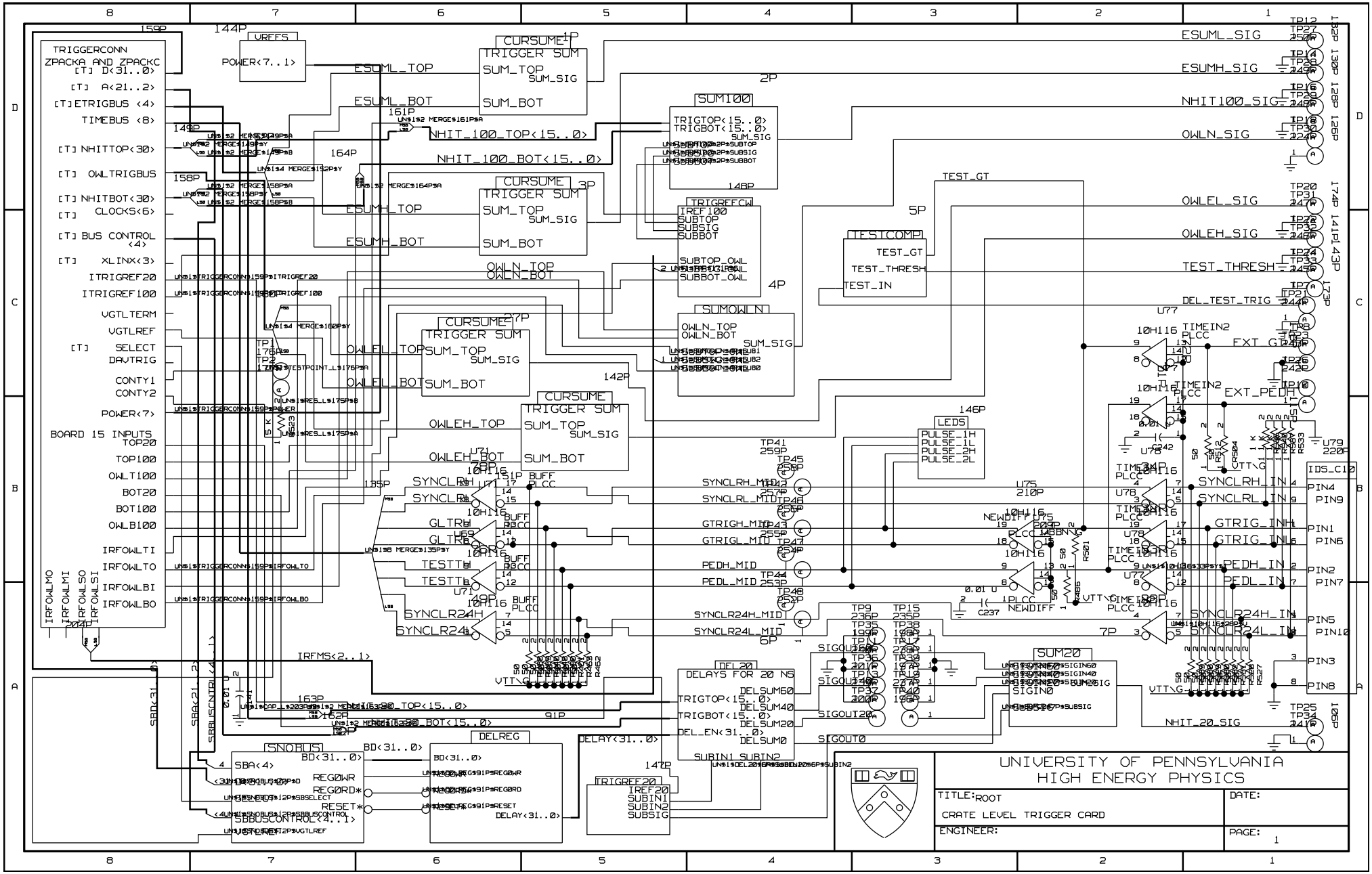

UNIVERSITY OF PENNSYLVANIA
HIGH ENERGY PHYSICS

TITLE: ROOT
CRATE LEVEL TRIGGER CARD

DATE:

ENGINEER:

PAGE: 1

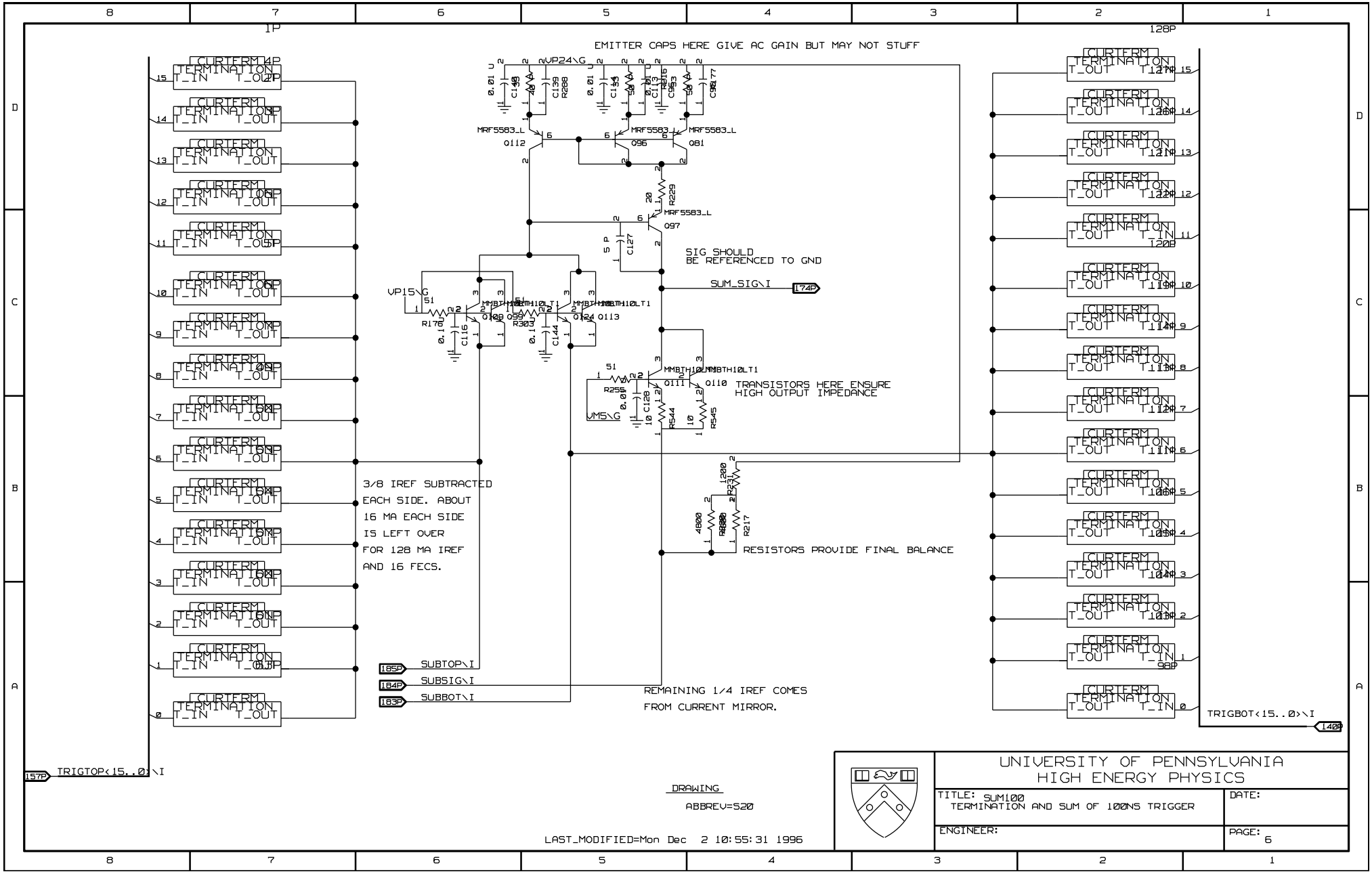

DRAWING

ABBREV=S20

LAST_MODIFIED=Mon Dec 2 10:55:31 1996

UNIVERSITY OF PENNSYLVANIA
HIGH ENERGY PHYSICS

TITLE: SUM100
TERMINATION AND SUM OF 100NS TRIGGER

DATE:

ENGINEER:

PAGE: 6

SUMOWLN

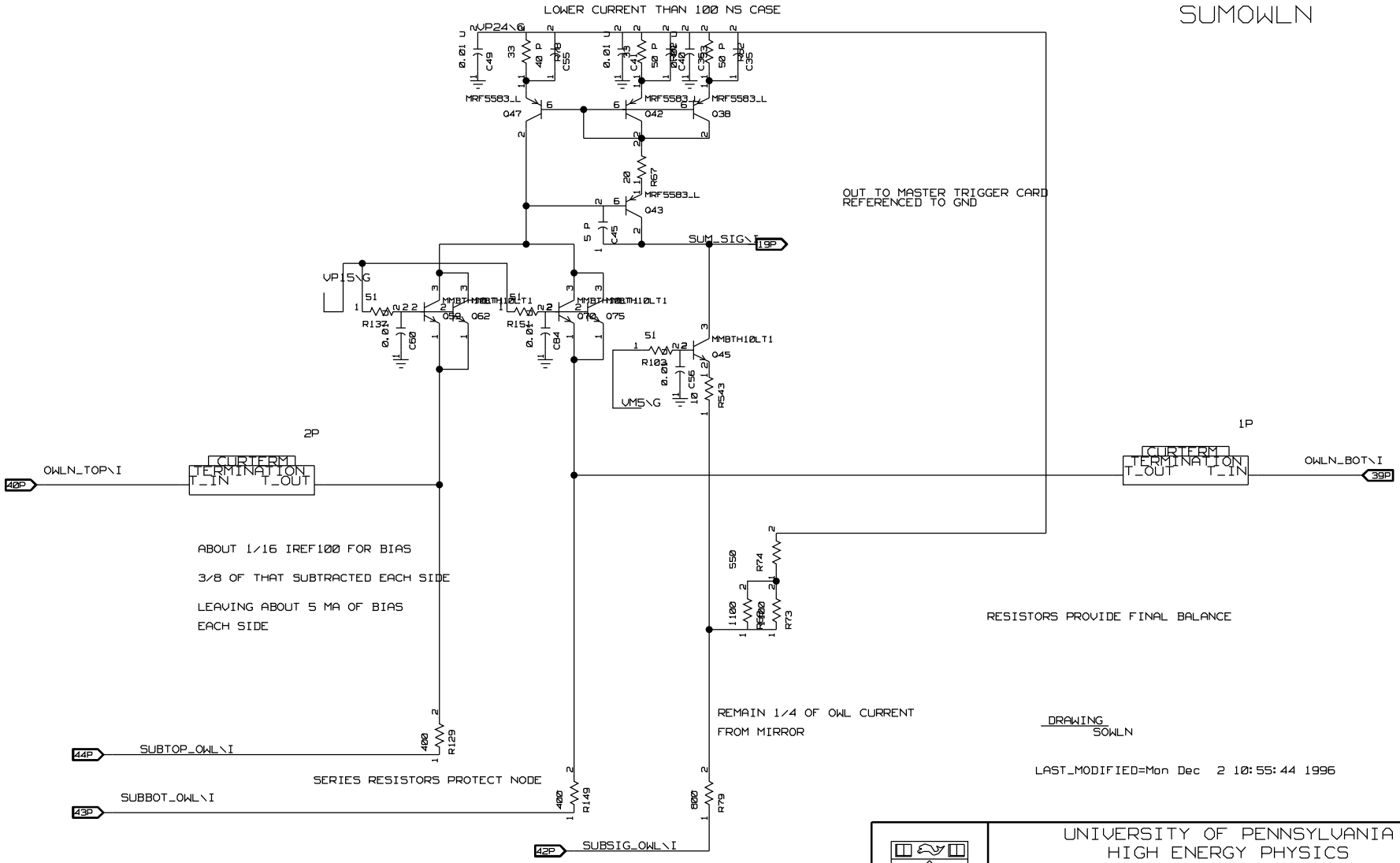

DRAWING
SOWLN

LAST_MODIFIED=Mon Dec 2 10:55:44 1996

UNIVERSITY OF PENNSYLVANIA
HIGH ENERGY PHYSICS

TITLE: SUMOWLN
NHIT SUM FOR OUTWARD LOOKING TUBES

DATE:

ENGINEER:

PAGE: 9

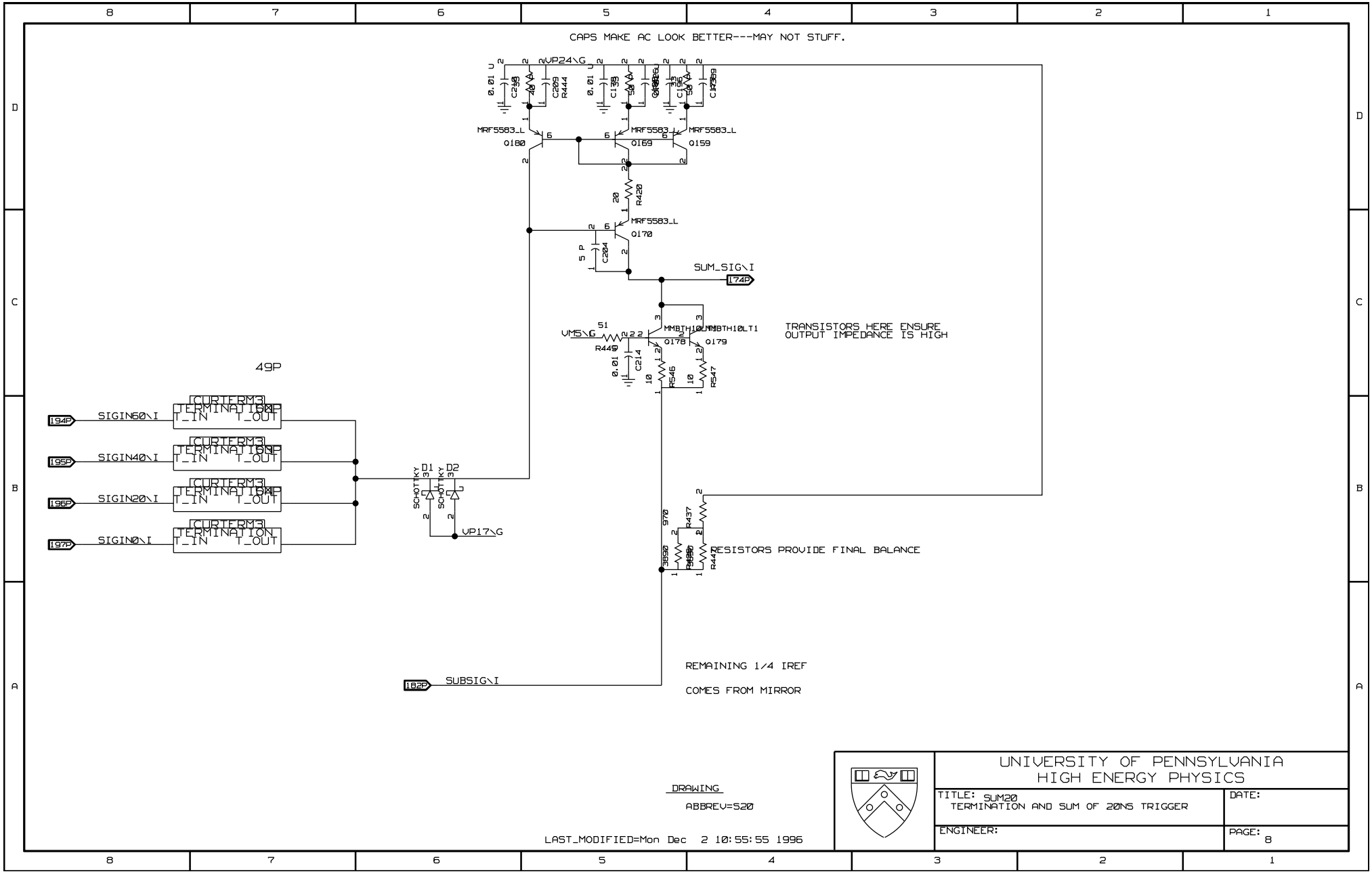

DRAWING

ABBREV=S20

LAST_MODIFIED=Mon Dec 2 10:55:55 1996

UNIVERSITY OF PENNSYLVANIA
HIGH ENERGY PHYSICS

TITLE: SUM20
TERMINATION AND SUM OF 20N5 TRIGGER

DATE:

ENGINEER:

PAGE: 8

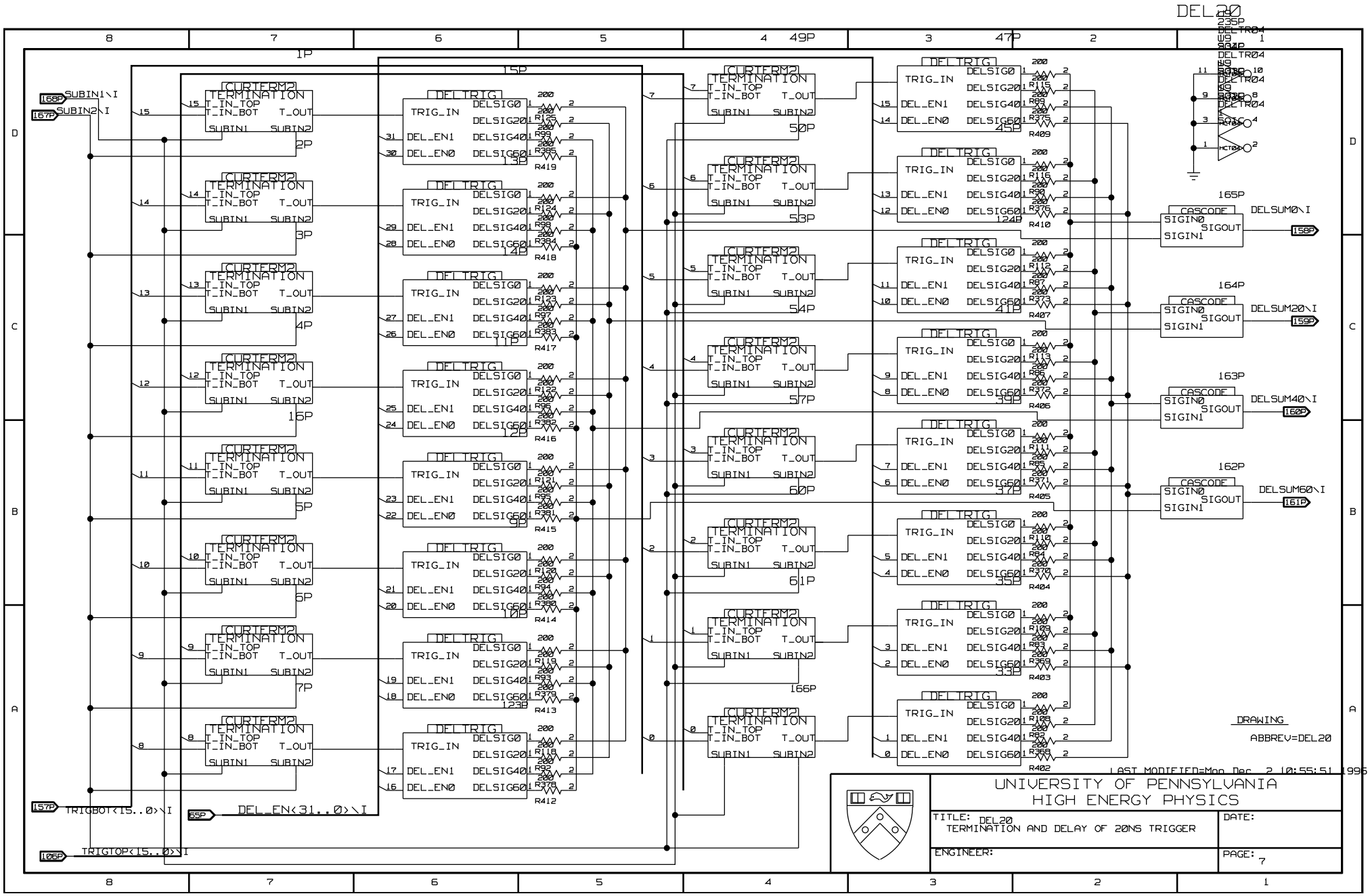
DEL20
SUBIN1\I
SUBIN2\I
TRIGBOT<15..0>\I
TRIGTOP<15..0>\I
DEL_EN<31..0>\I
CURTERM2
TERMINATION
T_IN_TOP
T_IN_BOT
T_OUT
SUBIN1
SUBIN2
DELTRIG
TRIG_IN
DEL_EN1
DEL_EN0
DELSIG0
DELSIG20
DELSIG40
DELSIG60
CASCODE
SIGIN0
SIGIN1
SIGOUT
DELSUM0\I
DELSUM20\I
DELSUM40\I
DELSUM60\I
DRAWING
ABBREV=DEL20
LAST MODIFIED=Mon Dec 2 10:55:51 1996
UNIVERSITY OF PENNSYLVANIA
HIGH ENERGY PHYSICS
TITLE: DEL20
TERMINATION AND DELAY OF 20NS TRIGGER
DATE:
ENGINEER:
PAGE: 7

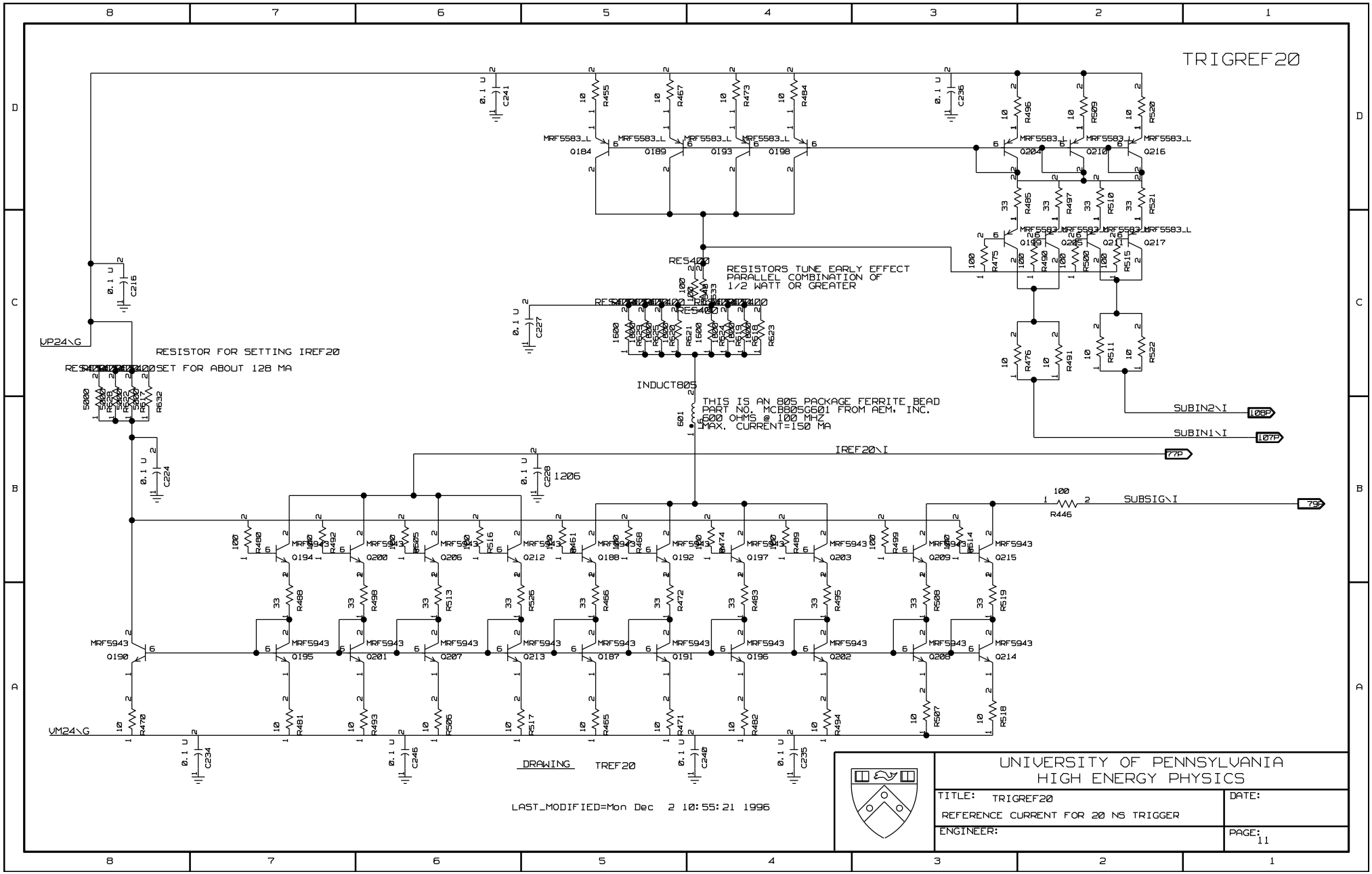
TRIGREF20
RESISTORS TUNE EARLY EFFECT
PARALLEL COMBINATION OF
1/2 WATT OR GREATER
RESISTOR FOR SETTING IREF20
SET FOR ABOUT 128 MA
THIS IS AN 805 PACKAGE FERRITE BEAD
PART NO. MCB805G601 FROM AEM, INC.
600 OHMS @ 100 MHZ
MAX. CURRENT=150 MA
INDUCT805
VP24\G
VM24\G
IREF20\I
SUBIN2\I
SUBIN1\I
SUBSIG\I
DRAWING TREF20
LAST_MODIFIED=Mon Dec 2 10:55:21 1996
UNIVERSITY OF PENNSYLVANIA
HIGH ENERGY PHYSICS
TITLE: TRIGREF20
REFERENCE CURRENT FOR 20 NS TRIGGER
DATE:
ENGINEER:
PAGE: 11

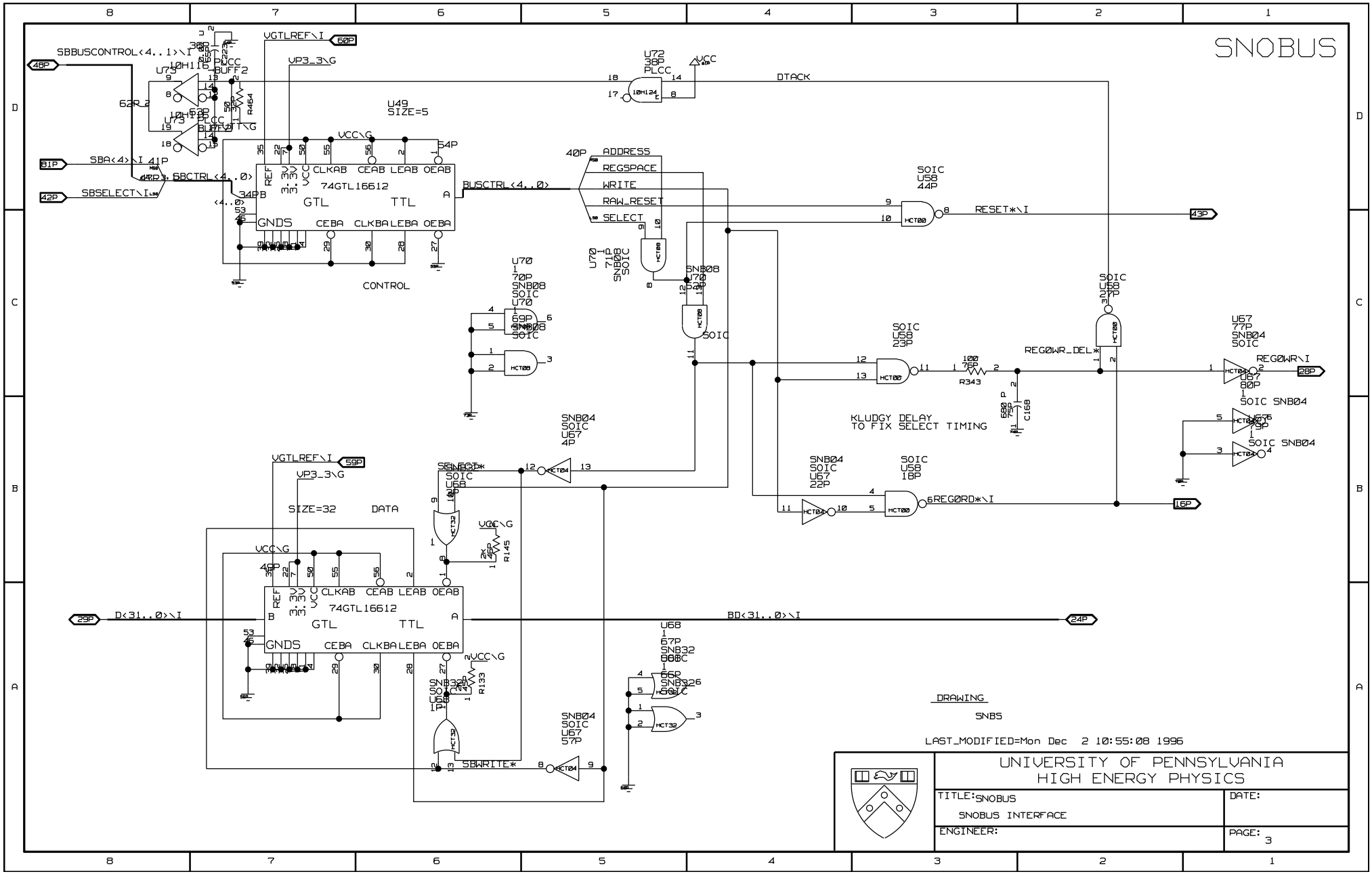
SNOBUS
SBBUSCONTROL<4..1>\I
VGTLREF\I
VP3_3\G
U49
SIZE=5
74GTL16612
CONTROL
SBA<4>\I
SBCTRL<4..0>
SBSELECT\I
BUSCTRL<4..0>
ADDRESS
REGSPACE
WRITE
RAW_RESET
SELECT
DTACK
RESET*\I
REG0WR_DEL*
REG0WR\I
REGORD*\I
KLUDGY DELAY
TO FIX SELECT TIMING
SIZE=32
DATA
D<31..0>\I
BD<31..0>\I
SBWRITE*
DRAWING
SNB5
LAST_MODIFIED=Mon Dec 2 10:55:08 1996
UNIVERSITY OF PENNSYLVANIA
HIGH ENERGY PHYSICS
TITLE: SNOBUS
SNOBUS INTERFACE
DATE:
ENGINEER:
PAGE: 3

LEDS

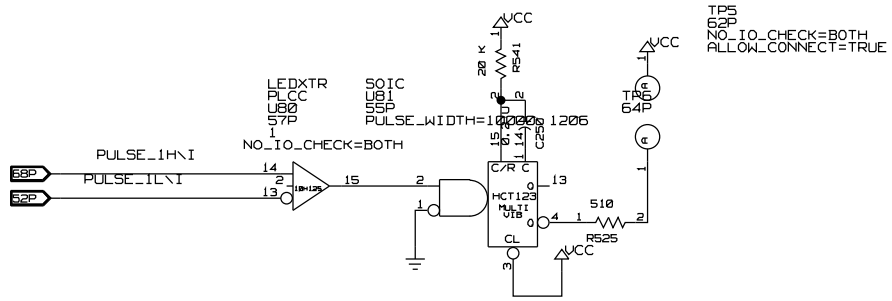

PULLDOWNS ARE AT FAR END OF SIGNALS, NOT HERE

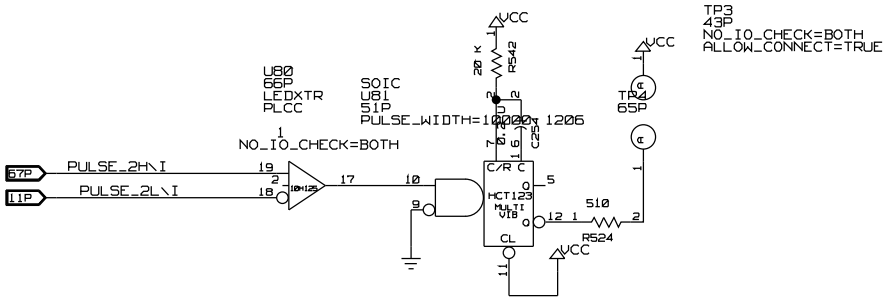

DRAWING

LEDS

LAST_MODIFIED=Mon Dec 2 10:55:16 1996

UNIVERSITY OF PENNSYLVANIA
HIGH ENERGY PHYSICS

TITLE: LEDS
LED MONITORS

DATE:

ENGINEER:

PAGE: 14

TESTCOMP

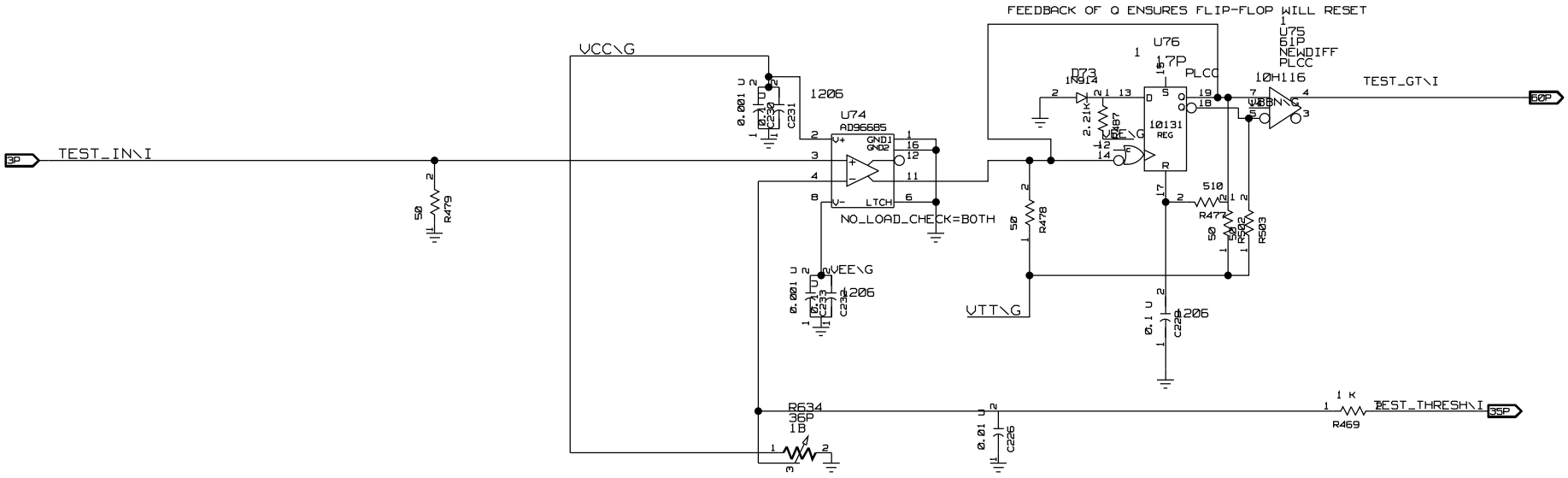

DRAWING
ABBREV=TCMP

LAST_MODIFIED=Mon Dec 2 10:55:47 1996

UNIVERSITY OF PENNSYLVANIA
HIGH ENERGY PHYSICS

TITLE: TESTCOMP
TEST COMPARATOR

DATE:

ENGINEER:

PAGE: 13

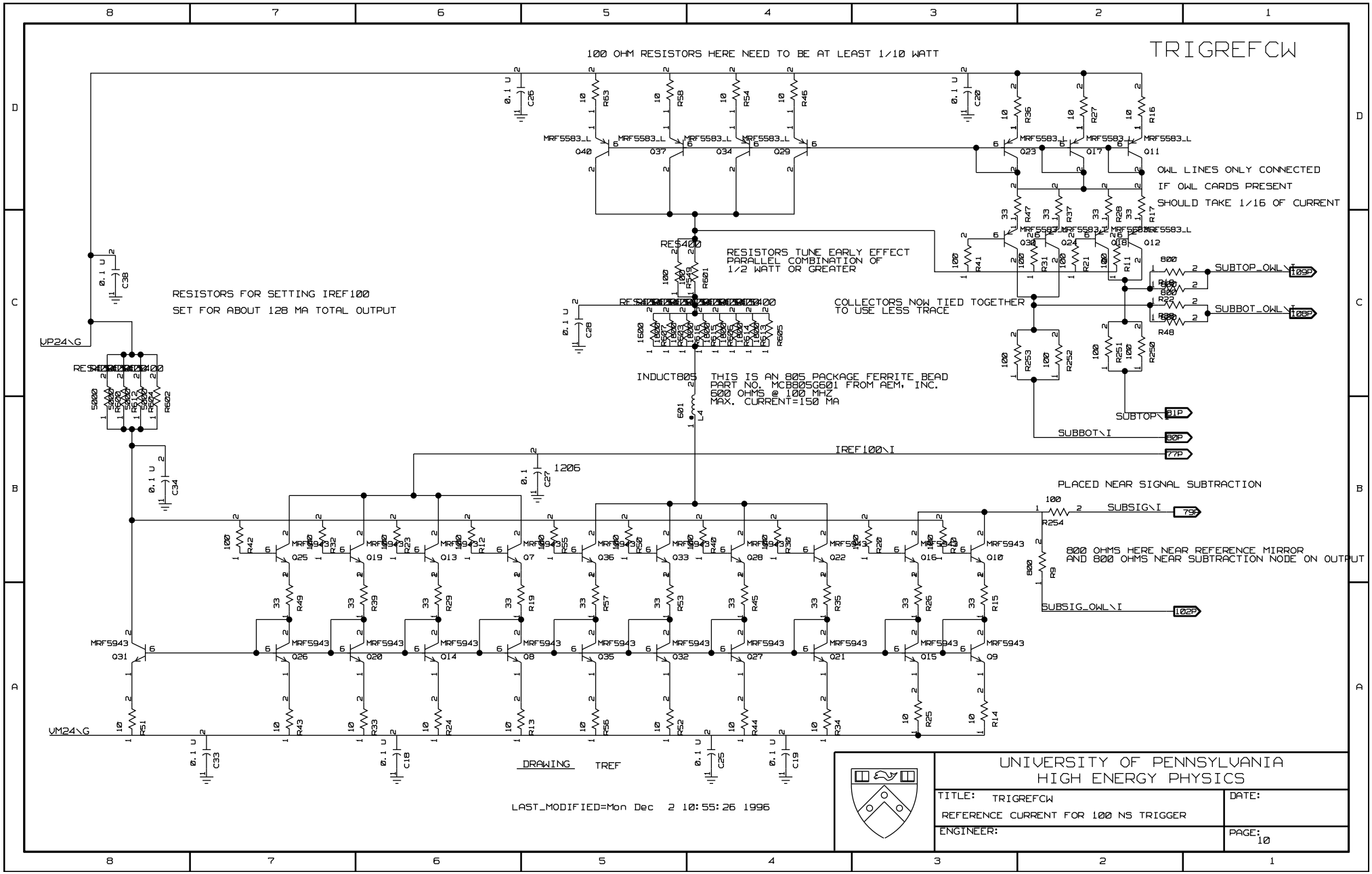
TRIGREFCW
100 OHM RESISTORS HERE NEED TO BE AT LEAST 1/10 WATT
OWL LINES ONLY CONNECTED
IF OWL CARDS PRESENT
SHOULD TAKE 1/16 OF CURRENT
RESISTORS TUNE EARLY EFFECT
PARALLEL COMBINATION OF
1/2 WATT OR GREATER
RESISTORS FOR SETTING IREF100
SET FOR ABOUT 128 MA TOTAL OUTPUT
COLLECTORS NOW TIED TOGETHER
TO USE LESS TRACE
SUBTOP_OWL\I
SUBBOT_OWL\I
VP24\G
INDUCT805
THIS IS AN 805 PACKAGE FERRITE BEAD
PART NO. MCB805G601 FROM AEM, INC.
600 OHMS @ 100 MHZ
MAX. CURRENT=150 MA
SUBTOP\I
SUBBOT\I
IREF100\I
PLACED NEAR SIGNAL SUBTRACTION
SUBSIG\I
800 OHMS HERE NEAR REFERENCE MIRROR
AND 800 OHMS NEAR SUBTRACTION NODE ON OUTPUT
SUBSIG_OWL\I
VM24\G
DRAWING TREF
LAST_MODIFIED=Mon Dec 2 10:55:26 1996
UNIVERSITY OF PENNSYLVANIA
HIGH ENERGY PHYSICS
TITLE: TRIGREFCW
REFERENCE CURRENT FOR 100 NS TRIGGER
DATE:
ENGINEER:
PAGE: 10

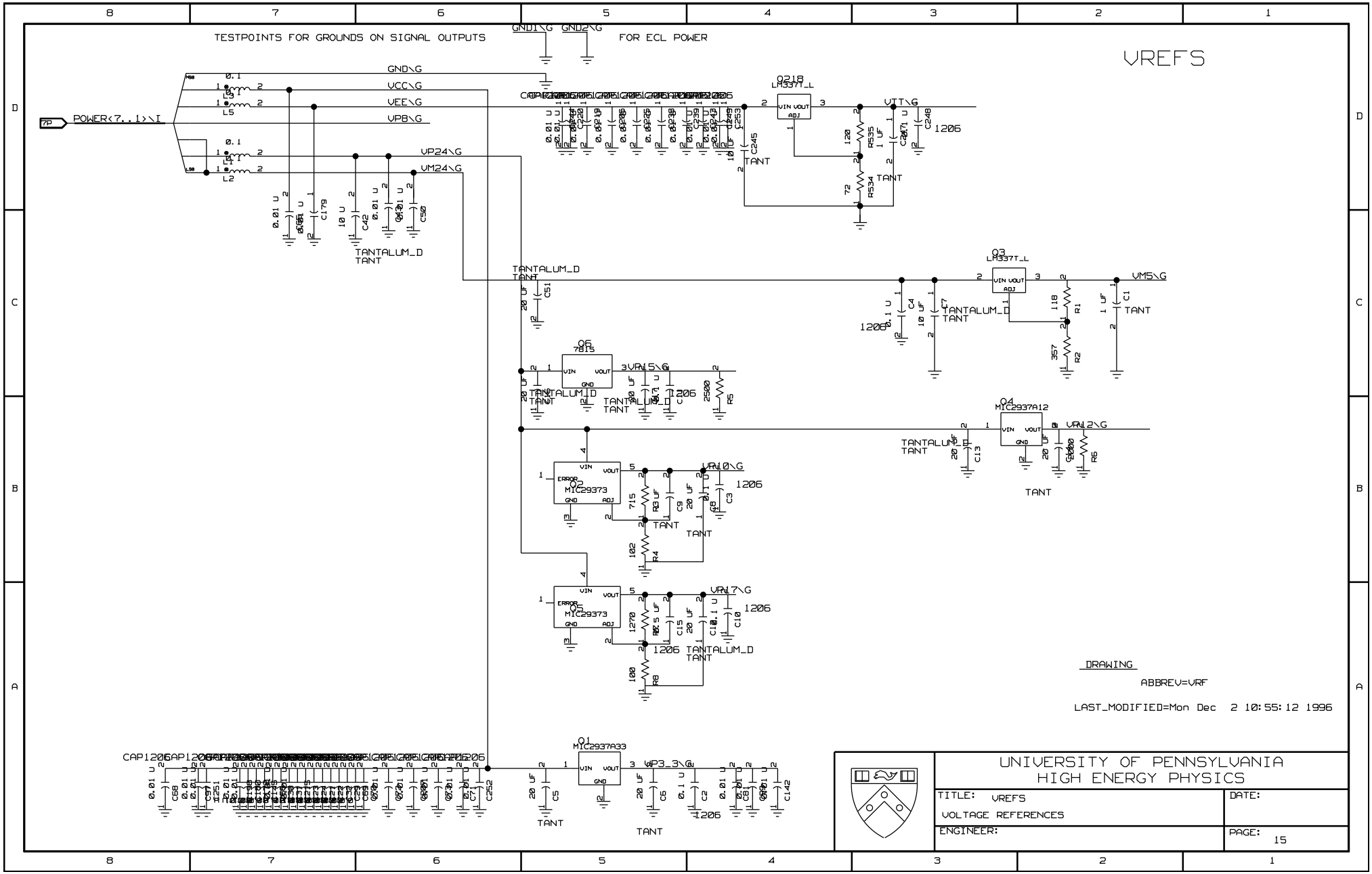
VREFS
TESTPOINTS FOR GROUNDS ON SIGNAL OUTPUTS
GND1\G GND2\G
FOR ECL POWER
POWER<7..1>\I
GND\G
VCC\G
VEE\G
VPB\G
VP24\G
VM24\G
VIT\G
VM5\G
VRN15\G
VRN12\G
VRN10\G
VRN7\G
VP3_3\G
Q218 LM337T_L
Q3 LM337T_L
Q6 7815
Q4 MIC2937A12
Q2 MIC29373
Q5 MIC29373
Q1 MIC2937A33
TANTALUM_D
TANT
1206
DRAWING
ABBREV=VRF
LAST_MODIFIED=Mon Dec 2 10:55:12 1996
UNIVERSITY OF PENNSYLVANIA
HIGH ENERGY PHYSICS
TITLE: VREFS
VOLTAGE REFERENCES
DATE:
ENGINEER:
PAGE: 15

CURSUME

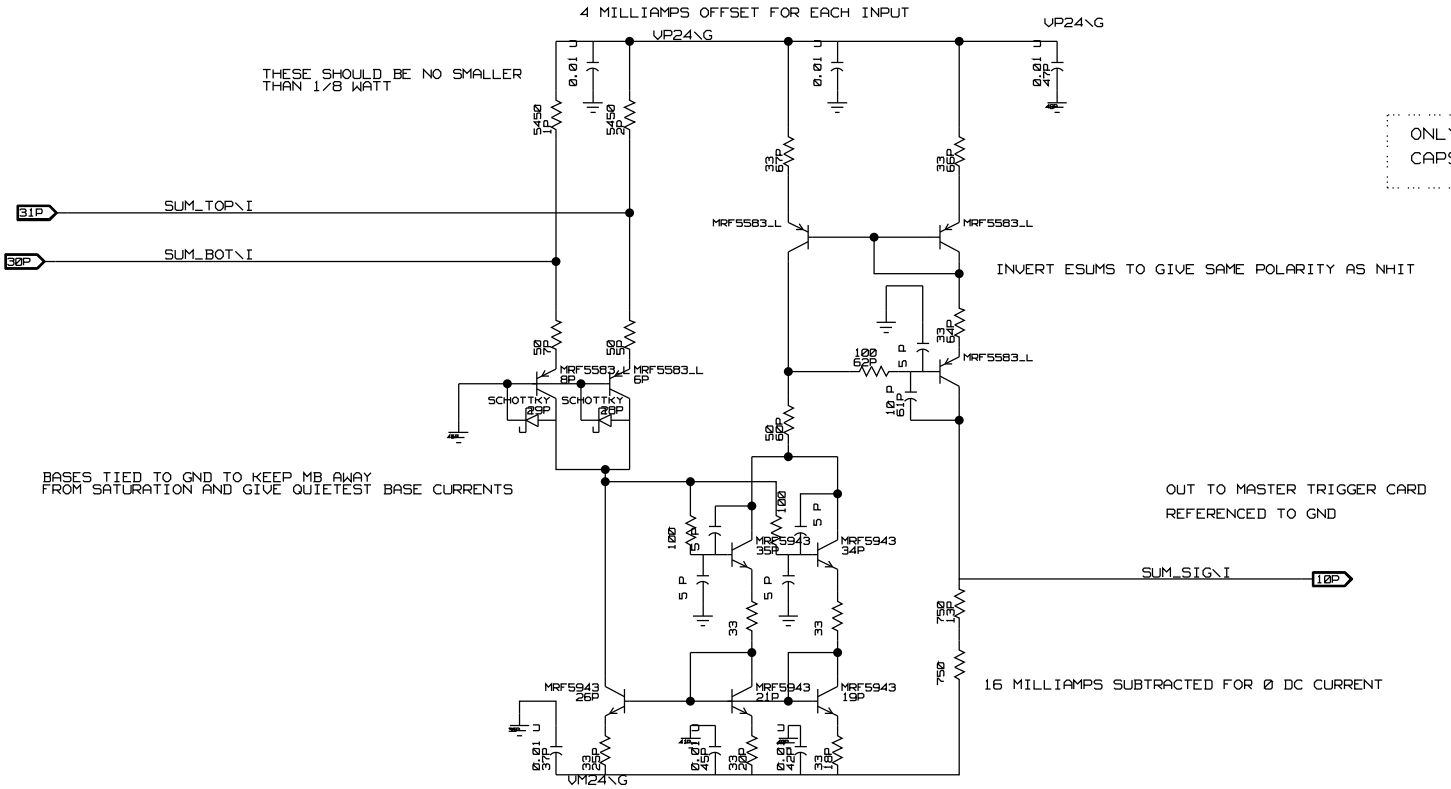

ONLY STUFF BASE-COLLECTOR AND BASE-GND CAPS IF OSCILLATIONS ARE A PROBLEM

DRAWING
ESUM

LAST_MODIFIED=Thu Sep 12 15:47:06 1996

UNIVERSITY OF PENNSYLVANIA
HIGH ENERGY PHYSICS

TITLE: CURSUME
CURRENT SUM FOR ENERGY TRIGGER

DATE:

ENGINEER:

PAGE: 5

DELREG

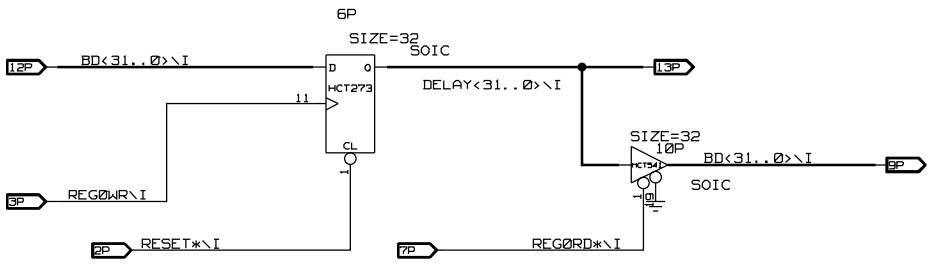

DRAWING

DLRG

LAST_MODIFIED=Mon Sep 9 15:20:58 1996

	UNIVERSITY OF PENNSYLVANIA HIGH ENERGY PHYSICS	
	TITLE: DELREG REGISTERS FOR 20 NS DELAYS	DATE:
	ENGINEER:	PAGE: 4

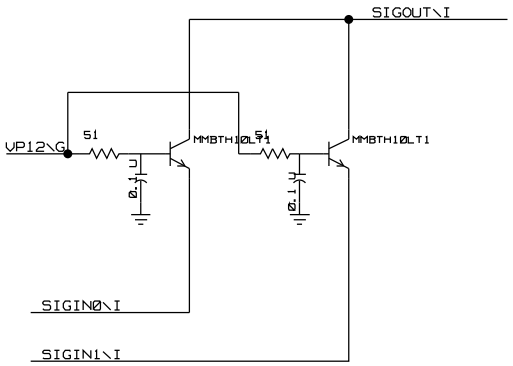

DRAWING

CASCS

LAST_MODIFIED=Tue Sep 10 17:37:02 1996

UNIVERSITY OF PENNSYLVANIA
HIGH ENERGY PHYSICS

TITLE: CASCODES
CASCODE BEFORE DELAY

DATE:

ENGINEER:

PAGE:

DELTRIG

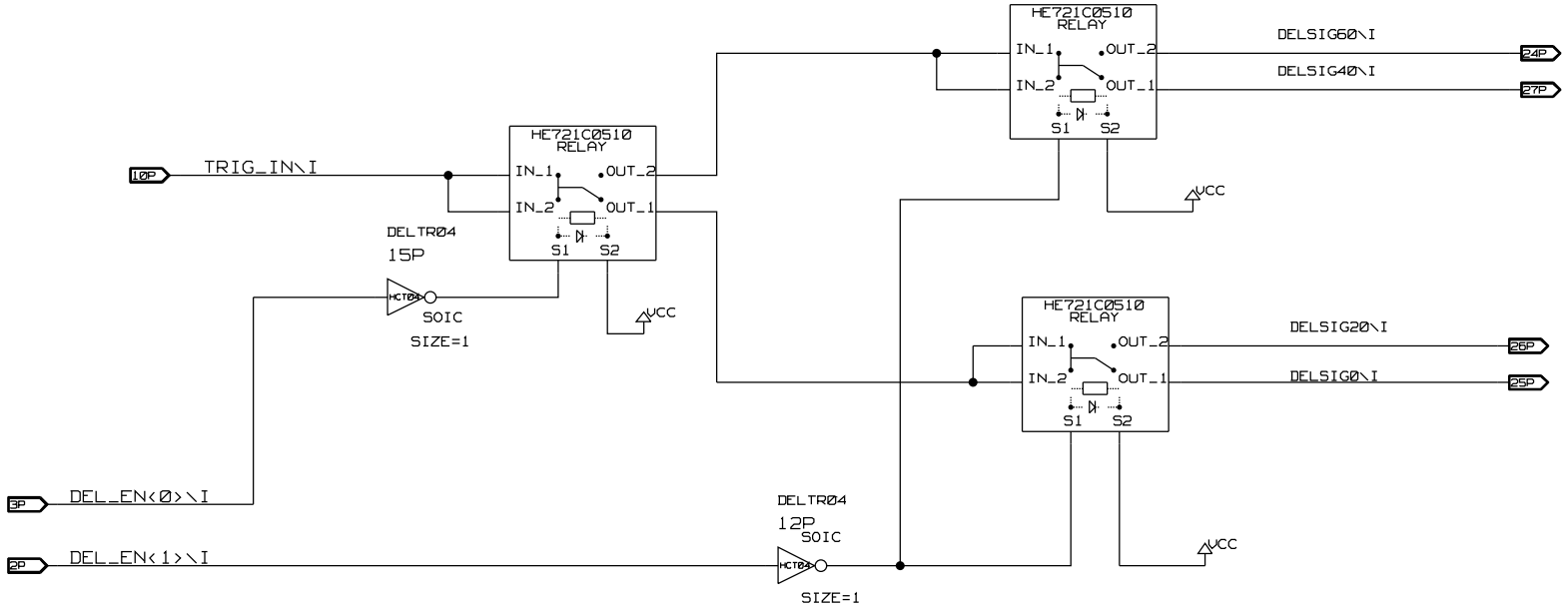

TRUTH TABLE

00 = 0 DELAY
01 = 20 NS DELAY
10 = 40 NS DELAY
11 = 60 NS DELAY

DRAWING

ABBREV=DTRG

LAST_MODIFIED=Tue Sep 10 13:30:41 1996

UNIVERSITY OF PENNSYLVANIA
HIGH ENERGY PHYSICS

TITLE: DELTRIG
20NS TRIGGER DELAYS

DATE:

ENGINEER:

PAGE: 7B

CURTERM2

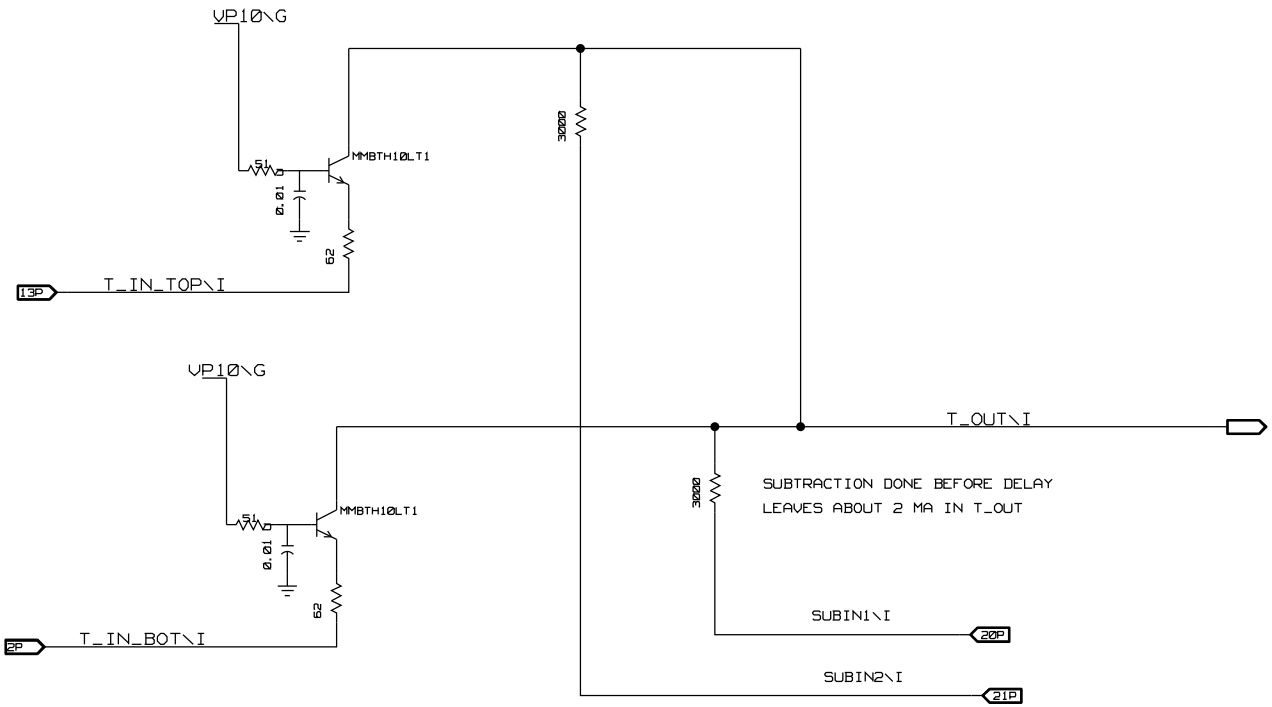

ABOUT 4 MA THROUGH EACH TRANSISTOR
SO 1/GM=6 OHMS
PLUS 40 OHMS FOR TERMINATION.
CAN BE CHANGED.

DRAWING
ABBREV=CTRM2

LAST_MODIFIED=Tue Sep 10 11:00:48 1996

UNIVERSITY OF PENNSYLVANIA
HIGH ENERGY PHYSICS

TITLE: CURTERM2
TERMINATION OF 20NS TRIGGER

DATE:

ENGINEER:

PAGE: 7A

CURTERM

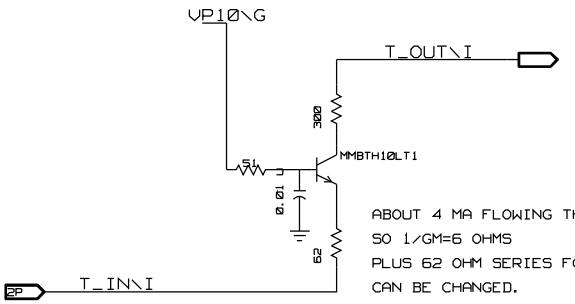

ABOUT 4 MA FLOWING THROUGH TRANSISTOR
SO 1/GM=6 OHMS
PLUS 62 OHM SERIES FOR TERMINATION.
CAN BE CHANGED.

DRAWING

ABBREV=CTRM

LAST_MODIFIED=Tue Sep 10 10:40:00 1996

UNIVERSITY OF PENNSYLVANIA
HIGH ENERGY PHYSICS

TITLE: CURTERM
TERMINATION OF 100NS TRIGGER

DATE:

ENGINEER:

PAGE: 6A

CURTERM3

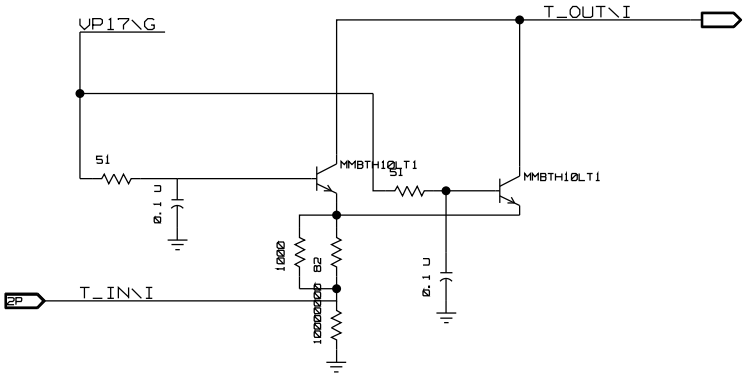

PARALLEL COMBINATION OF 1K AND 82 OHMS GIVES TUNABLE 75 OHM TERMINATION

DRAWING

ABBREV=CTRM3

LAST_MODIFIED=Mon Sep 9 17:08:06 1996

UNIVERSITY OF PENNSYLVANIA
HIGH ENERGY PHYSICS

TITLE: CURTERM3
TERMINATION OF 20NS TRIGGER

DATE:

ENGINEER:

PAGE: 8A

SNOBUS DRAFT PIN ARRANGEMENT - TRIGGER STATION

REVISED VERSION WITH:
NO MORE THAN 4 BUS LINES PER ROW
VM8 ON C4, C5 PINS
SEPARATE ROWS FOR VP24, VM24
ADJUSTED TO ALLOW FOR PADDLE CARD ORIENTATION

32 CHAN FEC CARD VIEW
TRANSLATOR TERMINATES THE TRIGGER AND TIMING BUSSES
TRANSLATOR DOES HAVE 17 SELECT LINES
NAMING: TOP SIGNALS END IN T, BOTTOM IN B
SB PREFIX = SNOBUS - BACKPLANE SIGNALS

CONN165

	A	B	C	D	E
1	GND	OWLSUMLB	GND	OWLSUMHB	CONTY1 \I
2	SBESUMLB	GND	SBESUMHB	GND	GND
3	GND	GND	GND	GND	GND
4	SBGLTRH	SBGLTRL	VM24	SBTESTTH	SBTESTTL
5	SBSYNCLRH	SBSYNCLRL	VM24	SBSYNCLR24H	SBSYNCLR24L
6	GND	GND	GND	GND	GND
7	GND	SBA<2> \I	SBA<3> \I	SBA<4> \I	SBA<5> \I
8	SBA<6> \I	GND	SBA<7> \I	SBA<8> \I	SBA<9> \I
9	SBA<10> \I	SBA<11> \I	GND	SBA<12> \I	SBA<13> \I
10	SBA<14> \I	SBA<15> \I	SBA<16> \I	GND	SBA<17> \I
11	SBA<18> \I	SBA<19> \I	SBA<20> \I	SBA<21> \I	GND
12	GND	SBD<0> \I	SBD<1> \I	SBD<2> \I	SBD<3> \I
13	SBD<4> \I	SBD<5> \I	SBD<6> \I	GND	SBD<7> \I
14	SBD<8> \I	SBD<9> \I	GND	SBD<10> \I	SBD<11> \I
15	SBD<12> \I	GND	SBD<13> \I	SBD<14> \I	SBD<15> \I
16	GND	SBD<16> \I	SBD<17> \I	SBD<18> \I	SBD<19> \I
17	SBD<20> \I	SBD<21> \I	SBD<22> \I	SBD<23> \I	GND
18	SBD<24> \I	SBD<25> \I	SBD<26> \I	GND	SBD<27> \I
19	SBD<28> \I	SBD<29> \I	GND	SBD<30> \I	SBD<31> \I
20	SBREGSPACE	GND	VM24	VM24	SBRESET
21	GND	SBDTACK	SBWRITE	VGTLREF \I	SBDAVA \I
22	VP24	VP24	GND	GND	SBDONE_PROGXL
23	SBDINXL	GND	SBCLKXL	SBSELECT \I	GND
24	VP8	VP8	VP8	VP8	VP8
25	GND	GND	GND	GND	GND
26	VP5	VP5	VP5	VP5	VP5
27	VP5	VP5	VP5	VP5	VP5
28	SBCLKADH	SBCLKADL	GND	SBCLKMEMH	SBCLKMEML
29	SBCLKSQH	SBCLKSQL	GND	ITRIGREF20 \I	ITRIGREF100 \I
30	VM5	VM5	VM5	VM5	VM5
31	VM5	VM5	VM5	VM5	VM5
32	SBESUMLT	GND	SBESUMHT	GND	GND
33	GND	OWLSUMLT	VGTLTERM \I	OWLSUMHT	CONTY2 \I

J3

54P

HIGH/LOW TRUE FINAL OR PENULTIMATE H OR L

BOTTOM TRIGGER

GND LINE

TIMING

BUS ADDRESS

BUS DATA

BUS CONTROL

XILINX LOAD PINS

MAIN POWER DIST

CLOCK

GND LINE

TOP TRIGGER

48P
SBREGSPACE (MSB)
SBWRITE
SBDTACK
SBRESET (LSB)
→ SBBUSCONTROL<4..1> \I

49P
SBSYNCLRH (MSB)
SBSYNCLRL
SBGLTRH
SBGLTRL
SBTESTTH
SBTESTTL
SBSYNCLR24H
SBSYNCLR24L (LSB)
→ SBTIMEBUS<8..1> \I

59P
SBCLKXL (MSB)
SBDINXL
SBDONE_PROGXL (LSB)
→ SBXLINX<3..1> \I

60P
GND (MSB)
VP5
VM5
VP8
VM24
VP24
VM24 (LSB)
→ POWER<7..1> \I

53P
SBCLKADH (MSB)
SBCLKADL
SBCLKSQH
SBCLKSQL
SBCLKMEMH
SBCLKMEML (LSB)
→ SBCLOCKS<6..1> \I

56P
SBESUMLT (MSB)
SBESUMHT
SBESUMLB
SBESUMHB (LSB)
→ SBETRIG<4..1> \I

58P
OWLSUMLT (MSB)
OWLSUMHT
OWLSUMLB
OWLSUMHB (LSB)
→ SBOWLTRIGBUS<4..1> \I

CONTY1 AND CONTY2 ARE CONNECTOR CONTINUITY TEST PINS

POWER IS:
+24V, -24V - ADCS, SOME OP AMPS/DACS, REFERENCES, TRIGGER
+3 FOR BIPOLAR, DACS, -8 FOR DACS
+5 FOR CMOS AND GENERAL LOGIC
-5.2 FOR ECL AND BIPOLAR

REFERENCES ARE:
VTRIGREF FOR CURRENT SUM BASE REFERENCES
VGTLREF FOR GTL TRANSCEIVER TERMINATIONS

THREE CLOCK VERSION -
SBCLKAD FOR ADCS
SBCKLSQ FOR SEQUENCER
SBCLKMEM FOR MEMORY

DRAWING

UNIVERSITY OF PENNSYLVANIA
HIGH ENERGY PHYSICS

TITLE: TRIGGERCONN
LAST_MODIFIED=Mon Dec 2 10:55:36 1996

DATE:

ENGINEER: RVB
ABBREV=TRIGGERCONN

PAGE: 8 OF 10

J1 AND J3 TRIGGER CONNECTORS - HAMMERHEAD VERSION

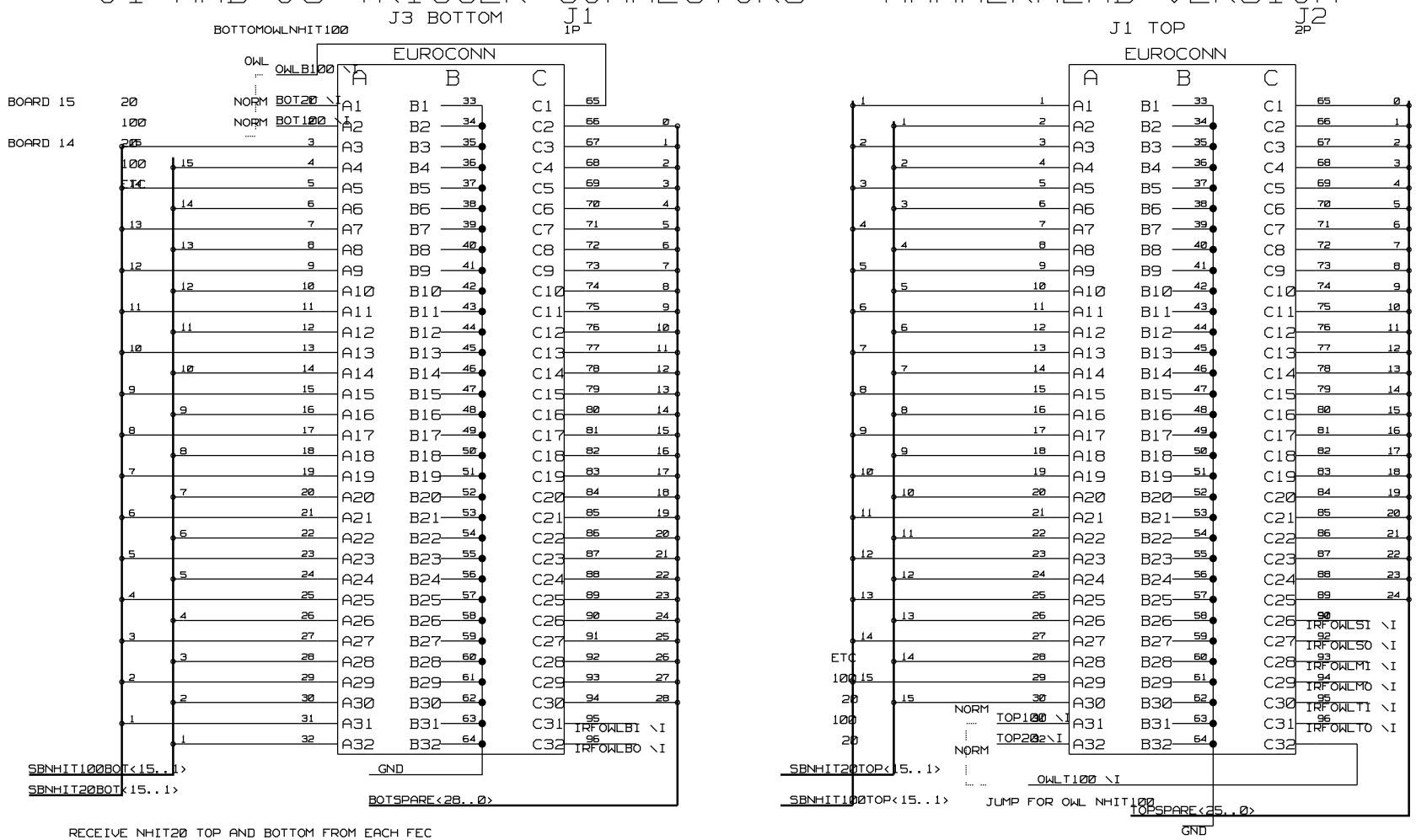

RECEIVE NHIT20 TOP AND BOTTOM FROM EACH FEC

RECEIVE NHIT100 TOP AND BOTTOM FROM EACH FEC

TOTAL 64 SIGNALS

DRAWING

UNIVERSITY OF PENNSYLVANIA
HIGH ENERGY PHYSICS

TITLE: TRIGGERCONN
LAST_MODIFIED=Mon Dec 2 10:55:41 1996

ENGINEER: ABBREV=TRIGGERCONN

PAGE: 9 OF 10

TABLE OF CONTENTS

1...ROOT SHEET

2

2.1 MIDDLE BACKPLANE CONNECTOR

2.2 J3 BACKPLANE CONNECTOR

3...SNOBUS INTERFACE

4...DELAY REGISTER

5...CURRENT SUM FOR ENERGY TRIGGER

6...CURRENT SUM FOR 100 NS TRIGGER

6A TERMINATION FOR 100 NS TRIGGER SIGNAL

7...TERMINATION AND DELAY FOR 20 NS TRIGGER SIGNAL

7A TERMINATION AND SUM OF 20 NS TOP/BOTTOM TRIGGER SIGNAL
7B 20 NS TRIGGER DELAY RELAYS
7.B.1 20 NS DELAY
7.B.2 40 NS DELAY

8...TERMINATION AND SUM OF 20 NS TRIGGER SIGNAL

8A TERMINATION OF 20 NS SIGNAL AFTER DELAY

9 TERMINATION AND SUM OF OUTWARD LOOKING TUBE TRIGGER SIGNAL

10...CURRENT REFERENCE FOR 100 NS AND OWL TRIGGER SIGNAL

11...CURRENT REFERENCE FOR 20 NS TRIGGER SIGNAL

12...TERMINATION BLOCK FOR BACKPLANE SIGNALS

13...COMPARATOR FOR TRIGGER TESTS

14...LEDS FOR TRIGGER MONITORING

15...VOLTAGES

UNIVERSITY OF PENNSYLVANIA
HIGH ENERGY PHYSICS

TITLE:

DATE:

ENGINEER:

PAGE: