Hitting a Baseball: A Biomechanical Description

Christian M. Welch, BS[1]
Scott A. Banks, PhD[2]
Frank F. Cook, MD[3]
Pete Draovitch, MS, PT, ATC, CSCS[4]

A tremendous amount of time and energy has been dedicated to the development of conditioning programs, mechanics drills, and rehabilitation protocols for the throwing athlete. In comparison, a significantly smaller amount has been spent on the needs of the hitting athlete. Before these needs can be addressed, an understanding of mechanics and the demands placed on the body during the swing must be developed. This study uses three-dimensional kinematic and kinetic data to define and quantify biomechanics during the baseball swing. The results show that a hitter starts the swing with a weight shift toward the rear foot and the generation of trunk coil. As the hitter strides forward, force applied by the front foot equal to 123% of body weight promotes segment acceleration around the axis of the trunk. The hip segment rotates to a maximum speed of 714°/sec followed by a maximum shoulder segment velocity of 937°/sec. The product of this kinetic link is a maximum linear bat velocity of 31 m/sec. By quantifying the hitting motion, a more educated approach can be made in developing rehabilitation, strength, and conditioning programs for the hitting athlete.

Key Words: *biomechanics, baseball, batting*

[1] *President, Human Performance Technologies, Inc., 825 South U.S. Highway One, Suite 200, Jupiter, FL 33477*
[2] *Technical Director, Orthopaedic Research Laboratory, Good Samaritan Medical Center, West Palm Beach, FL*
[3] *Co-Medical Director, Orthopaedic Research Laboratory, Good Samaritan Medical Center, West Palm Beach, FL*
[4] *Consultant, Orthopaedic Research Laboratory, Good Samaritan Medical Center, West Palm Beach, FL*

For as long as the game of baseball has been played, hitting has intrigued players, coaches, and researchers alike. Advancing technology has facilitated the ability to capture the act of hitting and analyze the mechanics involved. In 1961, Race (14), with the aid of a 16-mm movie camera and the swings of 17 minor league players, presented one of the first effective qualitative and quantitative breakdowns of the overall swing. The concepts of kinetic linking, angular measurement, balance, and judgment time were introduced and supported with data.

In subsequent studies, the ability to transform standard film and video into a three-dimensional representation of the captured hitting motion not only increased the accuracy of measurement, but introduced new analysis parameters. Using this technology, Shapiro (17), in a study of bat dynamics, described the bat's movement during the swing using the three-dimensional components of its motion, while DeRenne (4), through a series of studies, developed an elaborate method of assessing a hitter's mechanical efficiency.

The combination of biomechanical research and traditional baseball knowledge has begun the process of research and investigation (1,6,7,12, 18,19). The missing component to this point has been the ability to build a comprehensive understanding of the body's natural coordination and movement during the swing. Once a baseline understanding has been developed, we can move on to investigate the intricacies of specific mechanical parameters and relate this information to a hitter's ability at the plate. The goal of this study was to develop an understanding of baseline mechanics through quantitative biomechanical data and provide a preliminary synthesis of results for the application to training and rehabilitation.

METHODS

Testing Procedure

Thirty-nine (25 right-handed hitters and 14 left-handed hitters) male professional baseball players were tested at an indoor biomechanics facility. In order to maintain uniformity in the population used for this study, only the right-handed subjects were considered. Of the 25 right-handed hitters, only those who had at least 100 "at-bats" and a minimum batting average of .250 during the 1993 season were included. Each minor league player's batting statistics were combined for all clubs and organizations played with during the 1993 season.

Data included in this study, based on the defined criteria, were generated from seven subjects. The mean batting average for the subjects was .293 (±.032) and the average number of "at-bats" was 273 (±168). The

Journal of Orthopaedic & Sports Physical Therapy®
Downloaded from www.jospt.org at on April 15, 2026. For personal use only. No other uses without permission.
Copyright © 1995 Journal of Orthopaedic & Sports Physical Therapy®. All rights reserved.

seven subjects' level of play ranged from minor league to major league. At the time of testing, six subjects were playing in the minor leagues and one subject was playing in the major leagues. The average weight was 844 N (±24 N) and the average height was 1.83 m (±.06 m).

Preceding data collection, a system of 23 reflective markers was placed on the hitter, bat, and ball. Markers applied directly to the skin were held securely in place with soft foam adhesive biofeedback pads (Davicon, Billerica, MA). "Stick" markers, pelvis markers, and wrist markers were held in place using Neoprene wraps and Velcro™. Marker placement (Figure 1) included: *1)* right and left shoulder placed at the acromioclavicular joint, *2)* neck placed at C7 of the spine, *3)* right and left elbow placed at the lateral epicondyle, *4)* right and left wrist placed dorsally between the ulnar and radial styloid process, *5)* sacrum marker placed at L5 of the spine, *6)* right and left anterior superior illiac spine, *7)* right and left thigh using a "stick" marker to define the frontal plane, *8)* right and left knee placed at the joint line, *9)* right and left shank using a "stick" marker to define the frontal plane, *10)* right and left ankle placed at the lateral malleoli, *11)* right and left forefoot placed on top of the shoe, *12)* reflective tape on the ball, and *13)* reflective tape around the bat handle just above the hands and at the top of the barrel end of the bat.

Once a baseline understanding has been developed, we can move on to investigate the intricacies of specific mechanical parameters.

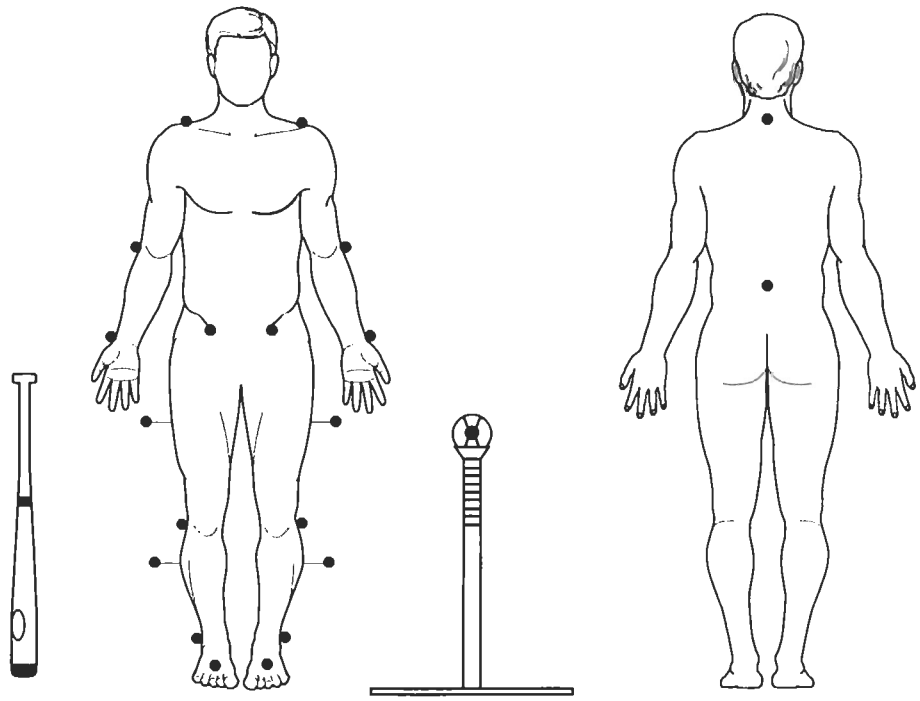

FIGURE 1. *Marker placement for subject, bat, and ball.*

After the subject had warmed up and the reflective markers had been securely applied, he was instructed to hit a number of baseballs off of a standard batting tee. The tee was placed in the hitting area so that the designated batter's box was comprised of two force plates. The force plates were arranged side by side so that the subject could comfortably place each foot on an individual force plate. The tee was adjusted to the subject's preferred position and height to hit a line drive "up the middle," based on both verbal communication with the subject and warm-up performance. The subject was then asked to hit a ball marked with reflective tape for data collection. The three best line drive hits were used for data in this study. Criteria for determining the three best line drive hits included verbal communication with the subject, contact, flight of the ball, and accuracy of data collection.

During data collection, the movement of the reflective markers was simultaneously captured by six cameras at a rate of 200 frames per second (Motion Analysis Corporation, Santa Rosa, CA). The information collected by each of the six cameras was then mathematically processed and the three-dimensional movement of each marker was calculated using Expert Vision digitizing software (Motion Analysis Corporation, Santa Rosa, CA). In addition, the three-dimensional ground reaction forces were measured for each foot at a rate of 1000 samples per second using two six-channel force plates (Advanced Mechanical Technology, Inc., Newton, MA). Both the motion and the ground reaction force collection systems were electronically synchronized to begin collection simultaneously.

The parameters chosen to portray the motion of the baseball swing were consequently based on the biomechanical data. Kinematics and kinetics were calculated using the three-dimensional information generated during a test. The relative movement of the reflective markers within the global reference frame and body/joint reference frames defined

Journal of Orthopaedic & Sports Physical Therapy®
Downloaded from www.jospt.org at on April 15, 2026. For personal use only. No other uses without permission.
Copyright © 1995 Journal of Orthopaedic & Sports Physical Therapy®. All rights reserved.

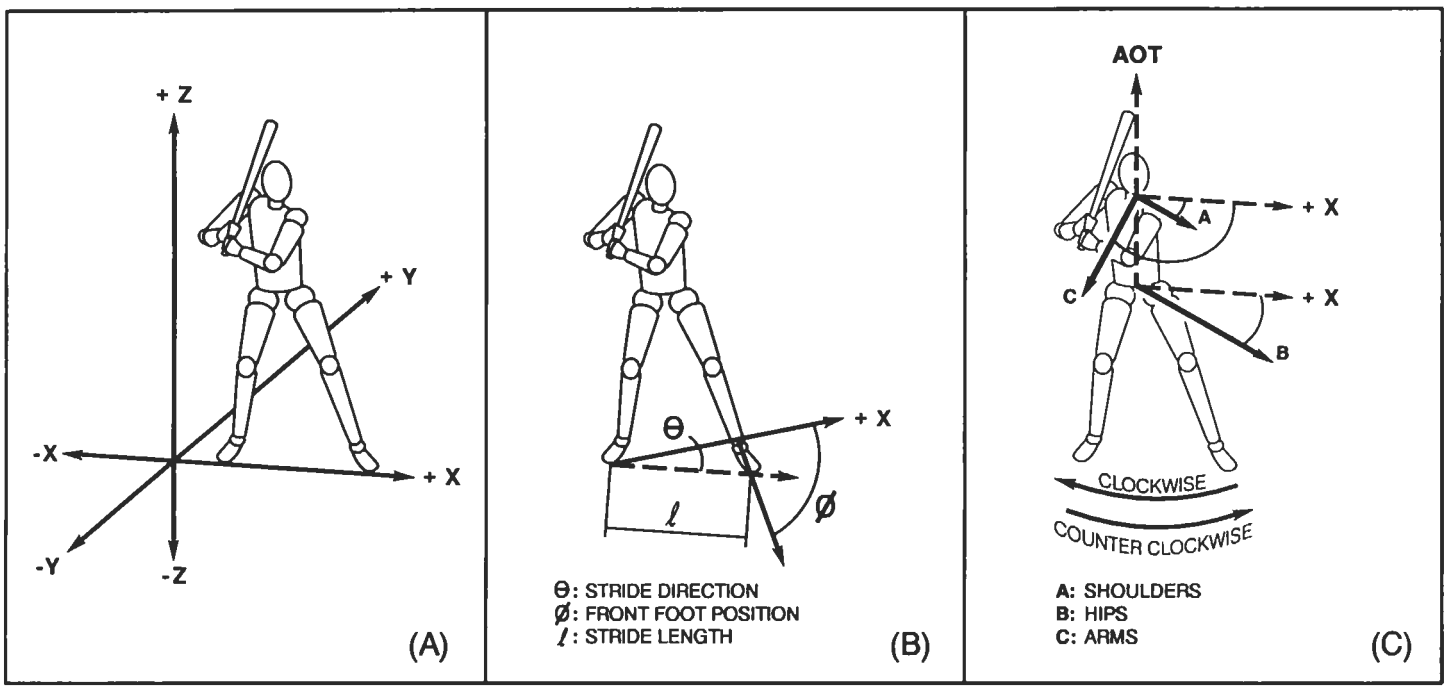

FIGURE 2. *Batter orientation and movement. A) Global reference frame. B) Stride parameters. C) Segmental rotation around axis of the trunk (AOT).*

Journal of Orthopaedic & Sports Physical Therapy®
Downloaded from www.jospt.org at on April 15, 2026. For personal use only. No other uses without permission.
Copyright © 1995 Journal of Orthopaedic & Sports Physical Therapy®. All rights reserved.

general kinematics, including displacement and velocity for both linear and angular measurements. The application of force by each foot to the ground relative to the coordinates of the global reference frame defined kinetics.

PARAMETER DESCRIPTION/ CALCULATION

Global Reference Frame

The global reference frame was defined as the three-dimensional coordinate system in which the relative movement of the body was measured (Figure 2A). Each of the three axes were perpendicular to each other and defined three planes of movement. For this study, the positive X axis was the most crucial because it was used as a reference for the segment rotation and stride parameters. It was defined as the direction from home plate to the pitching rubber and parallel to the surface of the batter's box. When looking in the positive X direction, positive Z was defined as pointing superiorly and positive Y was defined as pointing to the left.

Ground Reaction Forces

Ground reaction forces represented the interaction of the body with the ground (10). The three-dimensional force applied to the ground by both feet was measured during each swing. Each individual component of applied force (X, Y, Z) in the global reference frame (Figure 2A) was expressed as a value in N for the left and right foot. The resultant magnitude of force for each foot was expressed as a value in N as well as a percentage of body weight.

Center of Pressure/Center of Mass

The relative movement of the center of pressure between the two feet and the body's calculated center of mass in the global X direction was measured as an indication of dynamic balance and forward momentum (3,4,15). The position of the center of pressure between the two feet was calculated by first weighting the position of the center of pressure by the magnitude of the downward force for each individual force plate (each foot). The two weighted positions were then averaged to produce the center of pressure between the two feet in global coordinates. The center of mass was calculated using segment center of mass and segment body weight percentage measurements presented by Contini (3). The

The three-dimensional position of the center of mass for each individual segment was summed to produce the position of the whole body center of mass in global coordinates.

three-dimensional position of the center of mass for each individual segment was calculated, weighted by its percentage of body mass, and summed to produce the position of the whole body center of mass in global coordinates.

Stride

As the hitter strode forward and the front foot made contact with the ground, the length and direction of the stride as well as the position of the left (front) foot were defined (Figure 2B). Stride length was the distance between the right and left toe at foot down. It was expressed as a value in cm and as a percentage of the width of the hips from right hip center to left hip center. The direction of the stride was the angle formed between the vector from right to left toe and the global X axis (+ = closed, − = open). The position of the left foot was the angle formed between the vector from left ankle to left forefoot and the global X axis (+ = closed, − = open). Both were expressed in degrees.

Flexion/Extension

Flexion and extension of the left and right knee as well as the left and right elbow (8) were defined as the absolute angle formed between the proximal and distal segments comprising the joint. Full anatomical extension of the joint corresponded to 0° while full anatomical flexion of the joint corresponded to 180°.

Segment Rotation

A hitter's ability to utilize a kinetic link to generate bat speed depended heavily on the interaction of three body segments (4,11,13). The segments were the hips, shoulders, and the arms (Figure 2C). The hips were defined as a vector from the right hip to the left hip. The shoulders were defined as a vector from the right shoulder to the left shoulder and the arms were defined as a vector from mid-shoulders to mid-wrists. Their interaction was the rotation around a common axis. This axis was defined as the axis of the trunk from mid-hips to mid-shoulders and the rotation was measured with respect to the global X axis.

The orientation of the trunk axis was also measured. It was defined as the angle formed between the vector representing the trunk and the global Z axis in the median plane (+ = flexion, − = extension) and the frontal plane (+ = right, − = left) of the body.

Bat Movement

The movement of the bat can be described by bat lag (2,4,11) and the linear velocity of the end of the bat (9,17). For this paper, bat lag was defined as the absolute angle formed between the vector representing the bat from the handle to the barrel and the vector from mid-shoulders to mid-wrists. When the bat was fully extended away from the arms and both the vector representing the bat and the vector representing the arms were in line, the corresponding bat lag angle was 180°. The linear velocity at the barrel end of the bat was defined by the first derivative of each of the component displacements in the global reference frame (Figure 2A) and the resultant magnitude.

Batting Events

For the purpose of describing a hitter's natural coordination and movement, three key events were chosen as both landmarks for reference and for the identification of key mechanical transitions. The first was foot off. It was defined as the instant the left (front) foot broke contact with the ground and began the stride. The second was foot down. It was defined as the instant the left foot made full contact with the ground, ending the stride and beginning closed chain energy transfer. The third was ball contact. It was defined as the instant the bat made contact with the ball, beginning the follow-through.

RESULTS

Before the parameters were calculated, all three-dimensional data were smoothed using a fourth-order, zero phase shift, low pass Butterworth filter with a cut-off frequency of 13.3 Hz. The individual data included for each of the seven subjects were generated as the average of their three line drive swings. Mean kinematic and kinetic data ± standard deviation for the seven subjects are presented in Tables 1–4.

BIOMECHANICAL DESCRIPTION

The swing was initiated with a weight shift toward the right (back) leg. At approximately the same time, the upper body rotated in a clockwise direction (Figure 2C) around the axis of the trunk, initiated by the arms and shoulders, and followed closely by the hips. This began the coiling process.

Foot Off/Stride

Immediately following the initiation of coiling, the left (front) leg was lifted and the left foot broke contact with the ground (foot off), increasing the total force applied by the right (back) foot to a value of 102% of body weight. Part of the total force applied by each foot was shear force acting parallel to the ground in the global X and Y directions. Ground reaction to the shear force promoted the linear and rotational movement of the hitter. At foot off, the right foot applied 146 N of shear force in the negative X direction and 26 N in the positive Y direction. The right knee was flexed at 32° and the center of pressure had moved in the negative X direction toward the right foot to a point 20 cm behind the center of mass. The

Journal of Orthopaedic & Sports Physical Therapy®
Downloaded from www.jospt.org at on April 15, 2026. For personal use only. No other uses without permission.
Copyright © 1995 Journal of Orthopaedic & Sports Physical Therapy®. All rights reserved.

Parameter	Foot Off		Foot Down		Ball Contact	
	$\bar{X}$	SD	$\bar{X}$	SD	$\bar{X}$	SD
Right Foot						
Total force (N)	862	99	497	205	147	122
Percent of body weight	102	3	58	20	16	12
X component (N)	−146	32	−80	54	8	27
Y component (N)	26	14	184	69	−1	28
Z component (N)	−848	97	−438	220	−139	123
Left Foot						
Total force (N)			1007	472	709	270
Percent of body weight			123	63	84	32
X component (N)			292	167	153	146
Y component (N)			−280	125	28	65
Z component (N)			−917	429	−672	270

SD = Standard deviation.

TABLE 1. *Force applied by each foot at key points in swing.*

Parameter	$\bar{X}$	SD
HMRV (°/sec)	714	76
SMRV (°/sec)	937	102
AMRV (°/sec)	1160	96
BLMRV (°/sec)	1588	162
BMLV (m/sec)	31	2

SD = Standard deviation.
HMRV = Hip segment maximum rotational velocity.
SMRV = Shoulder segment maximum rotational velocity.
AMRV = Arm segment maximum rotational velocity.
BLMRV = Bat lag maximum rotational velocity.
BMLV = Bat maximum linear velocity.

TABLE 2. *Maximum segment rotational velocities and bat linear velocity.*

Journal of Orthopaedic & Sports Physical Therapy®
Downloaded from www.jospt.org at on April 15, 2026. For personal use only. No other uses without permission.
Copyright © 1995 Journal of Orthopaedic & Sports Physical Therapy®. All rights reserved.

arms, which led the clockwise rotation, had rotated to 150° at foot off, while the shoulders had rotated to 30°, followed by the hips at 18°. This rotation occurred around an axis of the trunk that was fairly upright. The trunk was flexed forward 21° and laterally left 6°.

As the stride continued toward foot down, the hips rotated to a maximum position of 28°, 0.350 seconds prior to ball contact. At that instant, the hips began to rotate in a counterclockwise direction. The shoulders, however, continued in a clockwise direction, increasing the coil of the trunk until they reached a maximum rotation of 52°, 0.265 seconds prior to ball contact. At that instant, they changed direction and followed the lead of the hips in a counterclockwise rotation toward the ball. The arms, at the same time, continued in a clockwise rotation around the axis of the trunk, increasing the coil of the upper body against the movement of the hips and shoulders.

Foot Contact

As the left forefoot made contact with the ground, the length and direction of the stride were defined. The mean stride length was a distance of 85 cm or 380% of hip width. The direction of the stride was 12° (closed) and the position of the foot as it began to make contact with the ground was 67° (closed) (Figure 2B). It was with left foot contact that the hitting action became a closed chain energy transfer. The arms which had increased the coil of the upper body by continuing in a clockwise rotation around the axis of the trunk reached a maximum position of 185° and began a counterclockwise rotation.

Weight was shifted forward as the heel of the left foot made contact with the ground (foot down). The left foot was in a position of 61° (closed) and was applying a total force equal to 123% of body weight to the ground. As a part of the total force applied by the left foot, 292 N of shear force were applied in the positive X direction and 280 N of shear force were applied in the negative Y direction. The total force applied by the right foot had decreased to 58% of body weight. As a part of the total force applied by the right foot, 80 N of shear force were applied in the negative X direction and 184 N of shear force were applied in the positive Y direction. At that point, the center of pressure had made a drastic shift forward in the X direction to a point 20 cm ahead of the center of mass.

With the weight shift forward and the shear force applied in the X and Y direction by both the left and right foot, segments were now accelerated to maximum velocities as the body coordinated an effort to produce bat speed. The left leg extended at the knee, pushing the left hip backward, while the right leg pushed the right hip forward, creating a counterclockwise acceleration of the hips around the axis of the trunk. The rotational velocity of the hips increased until it reached a maximum of 714°/sec, 0.075 seconds prior to ball contact. The shoulders and arms, following the lead of the hips, accelerated to a maximum rotational velocity of 937°/sec and 1160°/sec, respectively, 0.065 seconds prior to ball contact.

As a result of the body's coordination, the bat also moved around the axis of the trunk, increasing in both angular velocity and linear velocity. The two main components of linear movement were anterior or

Parameter	Foot Off		Foot Down		Ball Contact	
	$\bar{X}$	SD	$\bar{X}$	SD	$\bar{X}$	SD
Hip rotation (°)	18	7	−4	17	−83	9
Shoulder rotation (°)	30	14	29	16	−66	22
Arm rotation (°)	150	15	162	14	46	12
Bat lag (°)	39	9	43	10	132	6
Right knee flexion/extension (°)	32	13	42	15	45	12
Left knee flexion/extension (°)	43	12	41	8	15	9
Right elbow flexion/extension (°)	123	11	124	10	57	9
Left elbow flexion/extension (°)	85	12	70	11	37	8
Trunk flexion/extension (°)	21	6	20	6	−9	6
Trunk lateral flexion (°)	−6	4	3	11	20	5
Cop-Com (cm)	−20	3	20	20	24	16

SD = Standard deviation.
Cop-Com = The relative difference in position of the center of pressure between the two feet and the calculated whole body center of mass in the global X direction [(−) center of pressure behind center of mass, (+) center of pressure ahead of center of mass].

TABLE 3. *Position of body parameters at key points in swing.*

Parameter	$\bar{X}$	SD
Stride length (cm)	85	12
Stride as percent of hip width	380	75
Stride direction (°)	12	3
Lead foot position (°)	61	11

SD = Standard deviation.

TABLE 4. *Stride parameters.*

Journal of Orthopaedic & Sports Physical Therapy®
Downloaded from www.jospt.org at on April 15, 2026. For personal use only. No other uses without permission.
Copyright © 1995 Journal of Orthopaedic & Sports Physical Therapy®. All rights reserved.

away from the body in the negative Y direction and downward in the negative Z direction. The anterior movement of the bat away from the body increased to a velocity of 19 m/sec at 0.040 seconds before ball contact. At the same time, the downward movement of the bat increased to a maximum velocity of 16 m/sec. The linear motion of the bat then became dominated by an increase in the positive X direction toward the ball, while the Y and Z components of linear velocity decreased in magnitude (Figure 4).

Nearing the point of impact, the hitter utilized the last bit of angular speed and kinetic link as the speed of bat lag or uncocking reached its maximum value of 1588°/sec at 0.020 seconds before ball contact (Table 2, Figure 3). The bat was then driven to its maximum linear velocity of 31 m/sec in unison with the right arm maximum extension velocity of 948°/sec, both occurring 0.015 seconds before ball contact.

Ball Contact

At ball contact, the body had used both coordination and position to generate bat speed and direction. The linear speed of the bat had decelerated slightly to 29 m/sec, but the most significant component of that speed was directed in the positive X direction toward the ball. The left leg was acting as a block, flexed 15° at the knee and applying a total force to the ground equal to 84% of body weight. The right leg was now acting in a support capacity, flexed 45° at the knee and applying a total force of 16% of body weight to the ground. The trunk had moved through a significant range of motion in an effort to assist in bat position and become an extension of the front leg's block. It had moved through a range of 30° backward to a position of 9° of trunk extension. It had also moved through a range of 26° right to a position of 20° of right lateral flexion.

After ball contact, the body acted to slow itself and the bat through eccentric contraction and the diffusion of energy through the larger muscle groups (5). This study focused on the swing from foot off to ball contact; however, insight into the follow-through portion and the deceleration of segments can be gained using descriptions by Shaffer et al (16), Garhammer (5), and DeRenne (4).

DISCUSSION

To begin the process of building an understanding of mechanics and the demands placed on the body during the swing, it is essential to have a base understanding. The intent of this paper is to provide the first step through a quantitative biomechanical description of hitting a baseball. The description presented is not only fundamental to the knowledge of the mechanics of hitting, but also for the approach to analyzing a hitter's performance at the plate. A subject-positioned batting tee was used in this study to try to eliminate the variables of recognition, reaction, and adjustment to a pitched baseball. The resulting data, summarized in Tables 1–4, provide a very useful guide for understanding the general principles of both the mechanics and the physiology involved in hitting a baseball. The results also provide a foundation for not only studying the individual parameters more thoroughly, but studying variations within and between individual hitters.

Much like a golfer, the hitter generates bat speed using a kinetic link (11,13). A kinetic link can be briefly summarized as large base segments "passing" momentum to

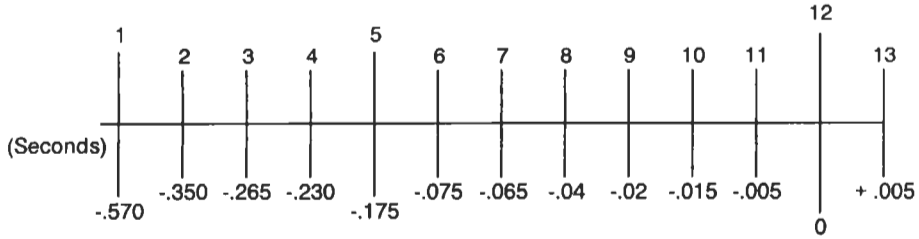

FIGURE 3. *Sequence of events occurring in a baseball swing in relation to ball contact. Events: 1) foot off, 2) maximum hip rotation, 3) maximum shoulder rotation, 4) maximum arm rotation, 5) foot down, 6) maximum hip rotational velocity, 7) maximum shoulder and arm rotational velocity, 8) maximum Y and Z components of bat linear velocity, 9) bat lag maximum rotational velocity, 10) maximum bat linear velocity and maximum right elbow extension velocity, 11) maximum X component of bat linear velocity, 12) ball contact, and 13) maximum left elbow extension velocity.*

smaller adjacent segments. The basic principle is that a system of segments moving at a certain velocity has momentum. When a large base segment decelerates, the velocity of the remaining system increases as it assumes the momentum lost by the base segment. In the particular instance of hitting mechanics, the segments are interrelated via the musculoskeletal system. This system can potentially accelerate and decelerate the segments through the application of muscular force, therefore, adding a second component to the kinetic link. Optimizing both the mechanical and physiological components creates the "motivation" for a majority of the mechanics incorporated during the hitting motion. Consequently, a large part of a hitter's mechanical performance is derived from maximizing the kinetic link parameters.

A hitter starts the swing with the clockwise rotation (right-handed hitter) of the arm, shoulder, and hip segments, while shifting weight toward the rear foot. This action can be considered the act of loading or coiling. The hitter moves segments opposite of both the intended rotational (counterclockwise for right-handed hitter) and linear (forward in the global positive X) direction before accelerating into ball contact. This action defines two components of motion: rotational and linear.

The rotational component involves the movement of segments around the axis of the trunk. The important factors to consider during the stride are the amount of clockwise rotation by each segment and the sequence of the initial movement of each segment in the counterclockwise (intended) direction. As shown in the results (Figure 3), it is important that the hip segment starts counterclockwise rotation before the shoulder segment, which, in turn, should start before the arm segment. This sequence allows the kinetic link system to begin to incorporate the musculature of the trunk and upper extremity through preload. Excessive clockwise rotation of individual segments or all of the segments may contribute to a reduction of muscular efficiency as well as produce a disruption in the sequencing of segments. In turn, the disruption of the sequence of each segment's initial rotation in the counterclockwise (intended) direction interrupts the hitter's ability to fully incorporate the trunk and upper extremity musculature.

The linear component is the forward movement (global positive X direction) of the body. By shifting weight to the rear foot, the hitter has moved the center of pressure behind the position of the center of mass (global X direction). Data in Table 3 show that the center of mass can be 20 cm ahead of the center of pressure. This moves the body out of an equilibrium state where the center of pressure and center of mass are aligned (15), causing the body to "motivate" toward the direction of the center of mass. This, combined with the application of shear force by the right foot (rear) in the global negative X direction, drives the hitter in a linear fashion toward the ball.

As the hitter's stride foot makes contact with the ground, the linear component and the rotational component begin to interact with each other. The interaction of the two movements determine how the kinetic link will be utilized. At foot down, the center of pressure has now moved ahead of the center of mass (Table 3). The application of shear forces by the left and right foot (Table 1) produce a force couple at the hip segment, facilitating its counterclockwise acceleration around the axis of the trunk. At this point in the swing, the hitter can mechanically emphasize either the rotational or linear component. If the rotational component is emphasized, the center of pressure aligns itself with the center of mass between both feet. This allows significant shear force to be applied by each foot and increases the force couple applied to the hip segment. If the linear component is emphasized, then the center of pressure stays in a forward position at the lead foot and the center of mass moves to align itself over the lead leg. In this case, the only significant shear application is produced by the lead foot, reducing the force couple applied to the hip segment for acceleration. The results of this study demonstrate that the emphasis of rotational and linear movements varies between hitters as shown by high standard deviations in shear force application (Table 1) and center of mass/center of pressure relative movement (Table 3).

Proper timing facilitates successively higher rotational velocities.

Journal of Orthopaedic & Sports Physical Therapy®
Downloaded from www.jospt.org at on April 15, 2026. For personal use only. No other uses without permission.
Copyright © 1995 Journal of Orthopaedic & Sports Physical Therapy®. All rights reserved.

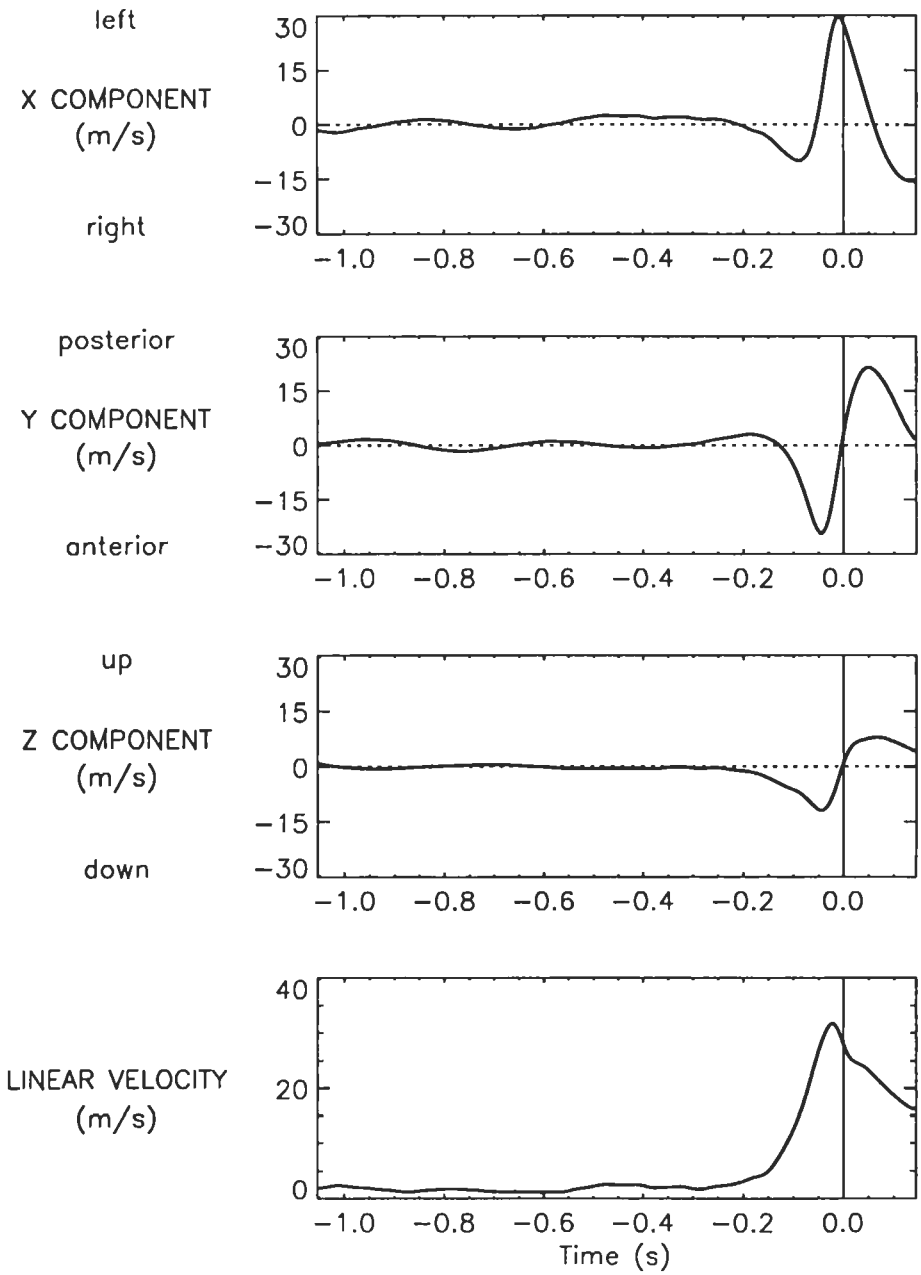

FIGURE 4. *Component and resultant linear velocities of the bat during a typical baseball swing. Vertical axis is velocity (m/sec) and horizontal axis is time (seconds). Time of 0.0 represents ball contact.*

Regardless of individual mechanics, the hip segment is accelerated around the axis of the trunk to a maximum velocity. This increases the velocity of the entire system moving in the intended direction. The hip segment is then decelerated, as the shoulder segment is accelerated, utilizing the kinetic link principle (4,11, 13). Again, timing is essential for the most efficient acceleration of each successive segment, culminating with the bat. Proper timing facilitates successively higher rotational velocities (Table 2), which, in turn, produce bat speed and power. Conversely, if a smaller adjacent segment reaches a maximum velocity before the preceding base segment, then it has lost the ability to make full use of the speed and, consequently, the momentum generated by the base segment.

Although these data are a preliminary step needed to lay the ground work for more in-depth study, they certainly serve as pertinent information for the clinician, whether that be the physician, therapist, trainer, or coach. The information in this paper provides a fundamental understanding of hitting biomechanics, which can serve as the basis for a structured and informed approach to the rehabilitation and training of the hitting athlete.

SUMMARY

The purpose of this study was to provide a foundation for the biomechanical study of hitting and the preliminary synthesis of data for application to the rehabilitation and training of the hitting athlete. This goal is achieved by presenting a biomechanical description of hitting a baseball using the mean kinematic and kinetic data of seven professional baseball players in a controlled environment. The emphasis of the data presented is the portrayal of the body's natural motion and coordination.

Additional studies are being conducted and will focus specifically on: *1)* the relationship between the rotational and linear components of weight transfer, *2)* the specific interaction of segments involved in the kinetic link, and *3)* the acceleration and power with which the bat moves into contact with the ball. Each of the additional studies will concentrate on a specific area of biomechanics introduced in this study. This will allow the concepts and principles involved to be fully investigated. The combination of all these studies will provide a comprehensive understanding of the biomechanics and coordination involved during the baseball swing. In addition, they will provide a stepping stone for the total understanding of a hitter's performance at the plate. JOSPT

Journal of Orthopaedic & Sports Physical Therapy®
Downloaded from www.jospt.org at on April 15, 2026. For personal use only. No other uses without permission.
Copyright © 1995 Journal of Orthopaedic & Sports Physical Therapy®. All rights reserved.

ACKNOWLEDGMENTS

The authors acknowledge the contributions of Sean Cunningham, ATC, CSCS of the Montreal Expos as well as the entire Montreal Expos organization for their baseball guidance and expertise. We also thank the athletes who participated in our study and continue to support our ongoing effort to study injury and performance mechanics.

REFERENCES

1. *Breen JL: What makes a good hitter? J Health Phys Ed Rec 38:36–39, 1967*
2. *Budney DR, Bellow DG: Kinetic analysis of a golf swing. Res Q 50(2):171–179, 1979*
3. *Contini R: Body segment parameters. Part II. Artif Limbs 16(1):1–19, 1972*
4. *DeRenne C: High-Tech Hitting: Science vs. Tradition, St. Paul, MN: West Publishing Company, 1993*
5. *Garhammer J: A kinesiological analysis of hitting for baseball. Natl Strength Conditioning Assoc J 5(2):6–7, 70–71, 1983*
6. *Lau C, Glossbrenner A, LaRussa T: The Art of Hitting .300, New York, NY: Viking Penguin, 1991*
7. *Lefebvre J: Hitting the baseball: Let's understand the process. Natl Strength Conditioning Assoc J 5(2):6–7, 70–71, 1983*
8. *McIntyre DR, Pfautsch EW: A kinematic analysis of the baseball batting swings involved in opposite-field and same-field hitting. Res Q Exerc Sport 53(3):206–213, 1982*
9. *Messier SP, Owen MG: Bat dynamics of female fast pitch softball batters. Res Q Exerc Sport 55(2):141–145, 1984*
10. *Messier SP, Owen MG: The mechanics of batting: Analysis of ground reaction forces and selected lower extremity kinematics. Res Q Exerc Sport 56(2):138–143, 1985*
11. *Milburn PD: Summation of segmental velocities in the golf swing. Med Sci Sports Exerc 14:60–64, 1982*
12. *Miller RG, Shay CT: Relationship of reaction time to the speed of a softball. Res Q 35(Suppl 3):433–437, 1964*
13. *Putnam CA: Sequential motions of body segments in striking and throwing skills: Description and explanations. J Biomech 26(Suppl):125–135, 1983*
14. *Race DE: A cinematographics and mechanical analysis of the external movements involved in hitting a baseball effectively. Res Q 32(3):394–404, 1961*
15. *Riley PO, Schenkman ML, Mann RW, Hodge WA: Mechanics of a constrained chair-rise. J Biomech 24(1):77–85, 1991*
16. *Shaffer B, Jobe FW, Pink M, Perry J: Baseball batting: An electromyographic study. Clin Orthop 292:285–298, 1993*
17. *Shapiro R: Three-dimensional kinetic analysis of the baseball swing. Unpublished doctoral dissertation, University of Illinois at Urbana-Champaign, Urbana-Champaign, IL, 1979*
18. *Watts L: Classroom approach to batting. Scholastic Coach 35:19–20, 1966*
19. *Williams T, Underwood J: The Science of Hitting, New York, NY: Simon and Schuster Inc., 1986*

Journal of Orthopaedic & Sports Physical Therapy®
Downloaded from www.jospt.org at on April 15, 2026. For personal use only. No other uses without permission.
Copyright © 1995 Journal of Orthopaedic & Sports Physical Therapy®. All rights reserved.