ResearchGate

See discussions, stats, and author profiles for this publication at: https://www.researchgate.net/publication/326050558

Modeling of a photovoltaic system with different MPPT techniques using MATLAB/Simulink

Conference Paper · June 2018

DOI: 10.1109/ENERGYCON.2018.8398734

CITATIONS
27

READS
1,802

3 authors:

Maria C. Argyrou
Cyprus University of Technology
24 PUBLICATIONS **805** CITATIONS

SEE PROFILE

Paul Christodoulides
Cyprus University of Technology
189 PUBLICATIONS **4,111** CITATIONS

SEE PROFILE

Soteris Kalogirou
Cyprus University of Technology
417 PUBLICATIONS **37,170** CITATIONS

SEE PROFILE

All content following this page was uploaded by Maria C. Argyrou on 20 November 2018.

The user has requested enhancement of the downloaded file.

Modeling of a photovoltaic system with different MPPT techniques using MATLAB/Simulink

Maria C. Argyrou
Department of Electrical Engineering,
Computer Engineering and Informatics,
Cyprus University of Technology,
Limassol, Cyprus
mx.argyrou@edu.cut.ac.cy

Paul Christodoulides
Faculty of Engineering
and Technology,
Cyprus University of Technology,
Limassol, Cyprus
paul.christodoulides@cut.ac.cy

Soteris A. Kalogirou
Department of Mechanical Engineering
and Materials Science and Engineering,
Cyprus University of Technology,
Limassol, Cyprus
soteris.kalogirou@cut.ac.cy

***Abstract*—Solar photovoltaic energy is one of the most growing technologies in the world with a growth rate of 35–40% per year. In this paper, a step-by-step modeling of a PV system is presented. Additionally, a Maximum Power Point Tracking (MPPT) algorithm finds the maximum power for the operation of the PV system during variations of solar irradiance and ambient temperature. Different MPPT techniques are simulated, namely the Perturbation and Observation (P&O) method, the incremental conductance and a fuzzy logic control, which can improve the efficiency of the PV system generation dramatically. The proposed model is implemented in MATLAB/ Simulink. The simulation results have shown that P&O and incremental conductance methods may fail under rapidly changing climatic conditions and present oscillations around the MPP during the steady state period. On the other hand, fuzzy logic control can track the system to the MPP very fast and accurately, even during rapid variations of atmospheric conditions.**

Keywords—photovoltaic, modeling, maximum power point tracking, MPPT, Perturbation and Observation, incremental conductance, fuzzy logic, Simulink.

I. INTRODUCTION

During the last decades, there is a growing interest for renewable energy sources (RES). The increasing electricity demand and the global warming reinforce the feeling for independence from conventional fuels and the utilization of the renewable energy sources. Among all the RES, solar energy can be considered as the most promising, widely available and essential resource. Specifically, solar photovoltaic is one of the most growing technologies in the world with a growth rate of 35–40% per year [1].

The main aim of this paper is the implementation of a step-by-step model of a photovoltaic (PV) array, which includes a Maximum Power Point Tracking (MPPT) control system. Similar studies based on the mathematical analysis of the PV module using MATLAB/Simulink can be found in [2]–[6]. Furthermore, a MPPT control is an important part in a PV system, because it can improve the efficiency of the system. There are many MPPT techniques available in literature. Most of the researchers compare the characteristics of the techniques with regard to their response time, cost, equipment requirements, efficiency or complexity. Some of them are theoretical and other focus on their simulation performance [7]–[11].

After presenting a mathematical model of a PV array in Section II, three different MPPT techniques are presented in Section III, namely the Perturbation and Observation (P&O) method, the incremental conductance method, and a fuzzy logic control method. All proposed models are implemented in MATLAB/ Simulink. A comparison of the results of the three models is given in Section IV. The paper concludes with a discussion for future research in Section V.

II. MATHEMATICAL MODEL OF A PHOTOVOLTAIC ARRAY

The PV module is a technology for conversion of sunlight into electricity. In other words, when a PV module is exposed to solar irradiation, it generates direct current without any noise or environmental impact. PV modules contain series and/or parallel connections of PV cells. These cells are basically semiconductor diodes whose p-n junction is exposed to sunlight [12]–[13]. PV modules can be connected in series and/or in parallel, forming photovoltaic arrays.

The studied model consists of 12 modules with a total power capacity of 3 kWp (two parallel strings of six PV modules in series). The electrical characteristics are given in Table I, some are taken from a manufacturer's datasheet [14] and the rest from [12]. The parameters are given under Standard Test Conditions (STC) with a module temperature of 298 K (25 ºC) and an irradiance of 1000 W/m^2.

TABLE I. ELECTRICAL DATA OF PHOTOVOLTAIC MODULE

Rated Power	250 W
Short-circuit current (I_{sc})	8.61 A
Open-circuit voltage (V_{oc})	37.41 V
Temperature coefficient of I_{sc} (K_i)	0.05 %/K or %/ ºC
Temperature coefficient of V_{oc} (K_v)	–0.32 %/K or %/ ºC
Series Resistance (R_s)	0.22 Ohms
Shunt Resistance (R_p)	415 Ohms
Number of cells in series (Ns)	60
Diode ideality factor (A)	1.3

Next, a step-by-step procedure explaining the mathematical analysis of the PV module with MATLAB/ Simulink is presented. Firstly, Fig. 1 shows the equivalent circuit of the one-diode PV cell. The value of series resistance R_s is usually

978-1-5386-3669-5/18/$31.00 ©2018 IEEE

very small, with that of the shunt resistance R_p being very large [15].

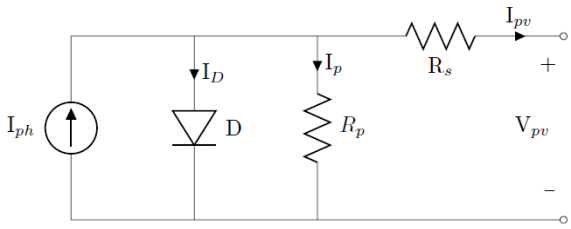

Fig. 1. Equivalent circuit of the one-diode PV cell

The module photocurrent I_{ph} can be calculated by

$$I_{ph} = [I_{sc} + Ki\,(T_c - T_{ref})] * (\frac{G}{Gref}) \qquad (1)$$

where I_{sc} is the short-circuit current [A], K_i is the temperature coefficient of the short-circuit current [%/K], T_c is the module temperature [K], G is the irradiation [W/m^2], T_{ref} = 298 K and G_{ref} = 1000 W/m^2.

The reverse saturation current is given by [16]–[17]:

$$I_o = \frac{I_{sc} + Ki\,(T_c - T_{ref})}{e^{[\frac{q[V_{oc} + K_v(T_c - T_{ref})]}{N_s A k T_c}]} - 1} \qquad (2)$$

where K_v is the temperature coefficient of the open-circuit voltage [%/K], k = 1.381x10^{-23} J/K is Boltzmann's constant and q = 1.602x10^{-19} C is the electron charge. The diode ideality factor A depends on the PV cell technology; e.g., for polycrystalline silicon cells A =1.3 [2].

Using Kirchhoff's Current Law, the output current of the PV module is given by

$$I_{pv} = I_{ph} - I_o(e^{\frac{q(V_{pv} + R_s I_{pv})}{N_s A k T_c}} - 1) - \frac{V_{pv} + R_s I_{pv}}{R_p} \qquad (3)$$

The studied PV model takes as inputs the ambient temperature T_c on the module, the solar irradiance G, and the array voltage, as shown in Fig. 2.

The PV array subsystem encloses the PV module subsystem (Fig. 3). The input array voltage is divided by the number of the modules connected in series (for the present model we have strings of 6 PV modules in series). Moreover, the output current of the module is being multiplied by the number of the modules in parallel connection (for the current model we have 2 strings in parallel).

The output current of the module is calculated using (3), as shown in Fig. 4.

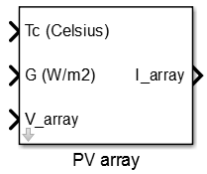

Fig. 2. Simulink representation of PV array subsystem

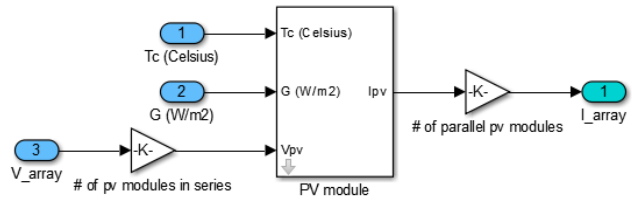

Fig. 3. Inside the PV array subsystem

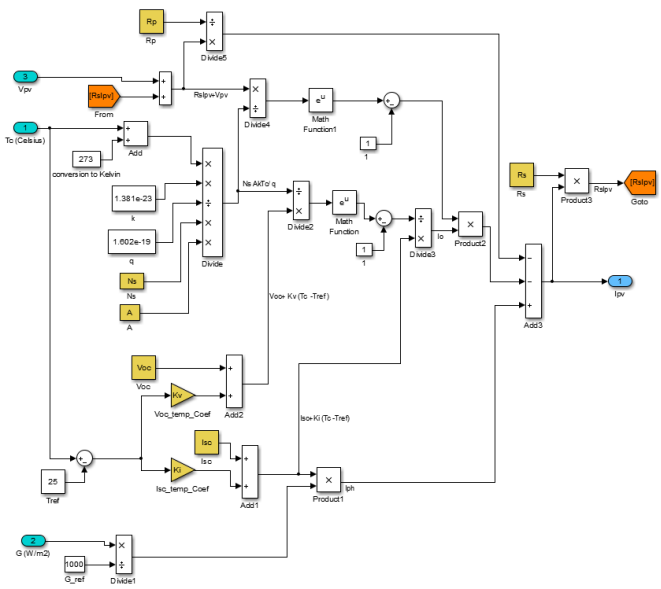

Fig. 4. Calculation of output current of PV module I_{pv}

III. Maximum Power Point Tracking

Maximum Power Point Tracking (MPPT) techniques are very significant, as one can improve the efficiency of the PV model through them. There are many methods of MPPT, such as the Perturbation and Observation (P&O), the incremental conductance, the Fractional Open-Circuit Voltage, the Fractional Short-Circuit Current, the fuzzy logic control and the Ripple Correlation Control. All the above vary in complexity, cost, popularity, convergence speed, hardware requirements and efficiency levels [7]–[11]. In this section, we examine Perturbation and Observation (P&O), incremental conductance and fuzzy logic control.

A. Perturbation and Observation (P&O)

Perturbation and Observation algorithm, also known as the hill climbing method, is one of the most commonly used

methods due to its ease of implementation. As can be seen in Fig. 5, the slope of the curve is zero at the maximum power point (MPP), positive on the left side of the MPP (increasing power region) and negative on the right side of the MPP (decreasing power region). Therefore, the algorithm is repeated and oscillated until the MPP is reached. The oscillation can be minimized by reducing the step-size of the perturbation, but this slows down the process reaching the MPP [10].

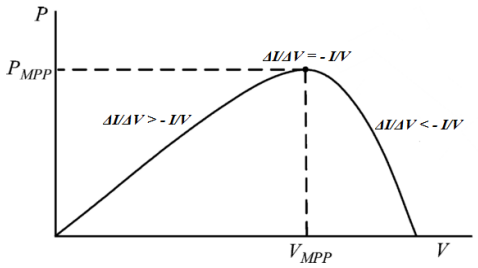

Fig. 5. Characteristic *P-V* curve of a photovoltaic array

There are many modifications of the conventional P&O method. For instance, a variable step-size can be used instead of a fixed step for perturbation [11]. Also, the variable for perturbation can be the converter duty cycle [18] or the array current [19].

In Fig. 6 there is a flowchart of our implementation based on the P&O algorithm. The algorithm is implemented using a MATLAB code and the representation of the PV system, in Simulink, is shown in Fig. 7.

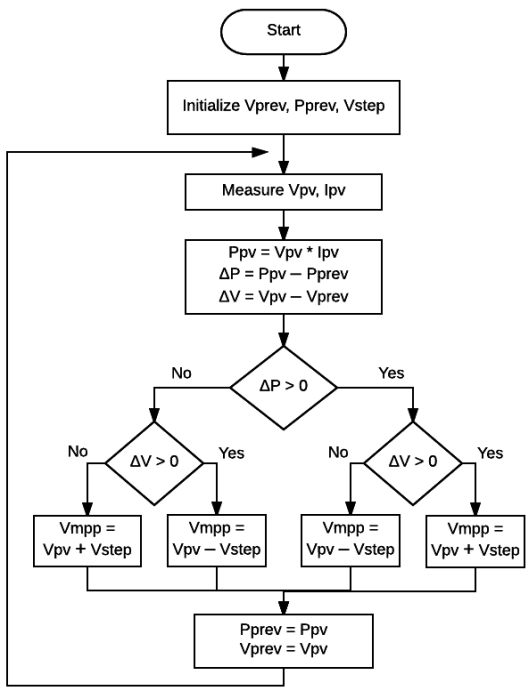

Fig. 6. Flowchart of the implemented P&O algorithm

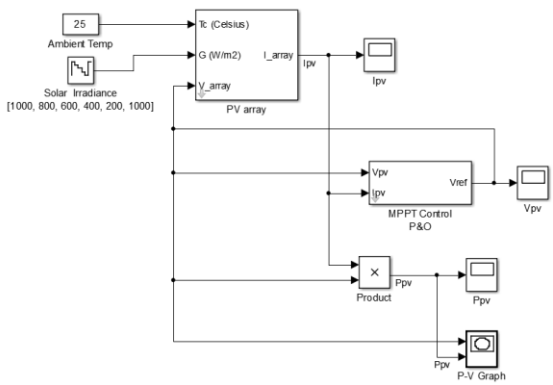

Fig. 7. PV system with P&O control in Simulink

B. Incremental Conductance

This technique is also considered as a hill climbing method. The MPP can be tracked by comparing the instantaneous conductance I/V to the incremental conductance $\Delta I/\Delta V$. In other words, the solution of (4) is zero at the MPP, positive on the left side of the MPP and negative on the right side of the MPP (Fig. 5).

$$\frac{dP}{dV} = \frac{d(IV)}{dV} = I + V\frac{dI}{dV} \cong I + V\frac{\Delta I}{\Delta V} \tag{4}$$

The flowchart of our implemented algorithm is shown in Fig. 8. The incremental conductance algorithm is as efficient and simple as the P&O algorithm. Additionally, a variable step-size can be used to improve the response time, accuracy and performance of the system, but the cost may be higher due to the increased complexity of the control system [20].

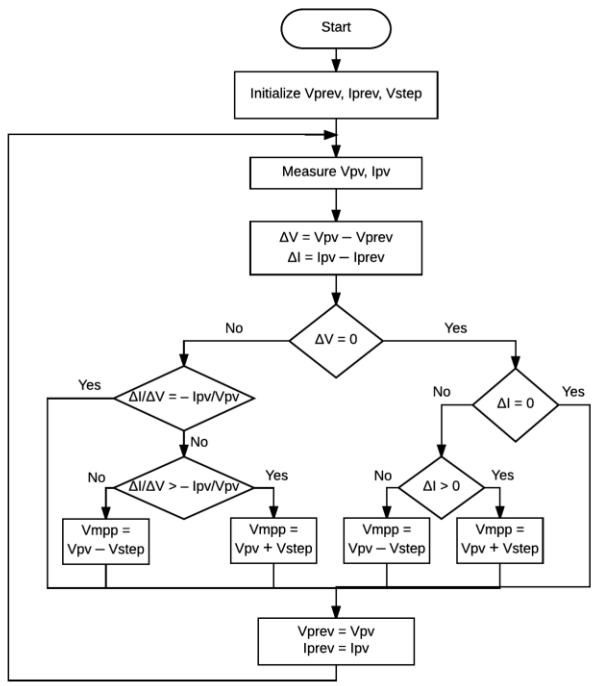

Fig. 8. Flowchart of the Incremental Conductance algorithm

C. *Fuzzy Logic*

Fuzzy logic is one of the most sufficient control techniques for MPPT, which has attracted many researchers in the last years. Fuzzy Logic controllers do not need an accurate mathematical model and can work with imprecise inputs. They have also the ability to handle nonlinear systems and control unstable systems [21].

The basic structure of any fuzzy logic controller is shown in Fig. 9 and consists of the following stages: fuzzification, rule base and inference engine, and defuzzification. Our proposed model takes as inputs the change in the array voltage (ΔV_{pv}) and the change in the array power (ΔP_{pv}) of the photovoltaic array. The output of the controller is the variation of the array voltage (ΔV_{ref}). It must be noted that different fuzzy input and output variables can be used [22]. For example, *P*-V slope and variation of *P-V* slope are some of the most common inputs, while converter duty cycle is used more often for output variable [23].

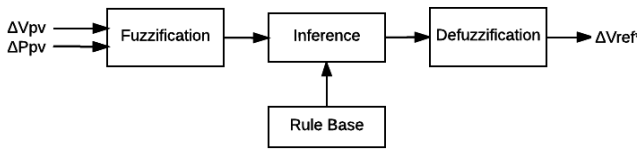

Fig. 9. Fuzzy Logic controller diagram

In the fuzzification stage, numerical input variables are converted into linguistic variables, such as NB (Negative Big), NS (Negative Small), ZE (Zero), PS (Positive Small) and PB (Positive Big) using basic fuzzy subset [24]. Each of them is described by a triangular-shaped membership function (Fig. 10). An alternative case may be also a Gaussian-shaped membership function [25]–[26].

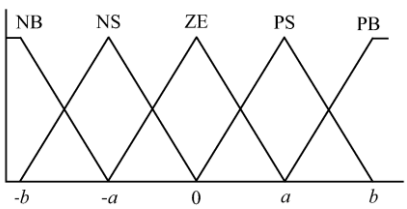

Fig. 10. Membership function for inputs and output of fuzzy logic controller

The fuzzy inference engine processes the inputs according to the rules base table (Table II) and produces the linguistic output. The defuzzification stage is used to convert the output linguistic variable back to numerical variable. The centroid method, which is the most prevalent one, is used for defuzzification. The resulting output ΔV_{ref} is then added to the previous value of voltage to get the new value of the array voltage. This value of voltage is going back as input to the PV array. The studied model implemented in Simulink is shown in Fig. 11.

TABLE II. FUZZY LOGIC RULES BASE TABLE

ΔP_{pv} / ΔV_{pv}	NB	NS	ZE	PS	PB
NB	PS	PS	ZE	NS	NS
NS	PB	PS	ZE	NS	NB
ZE	NB	NS	ZE	PS	PB
PS	NB	NS	ZE	PS	PB
PB	NS	NS	ZE	PS	PS

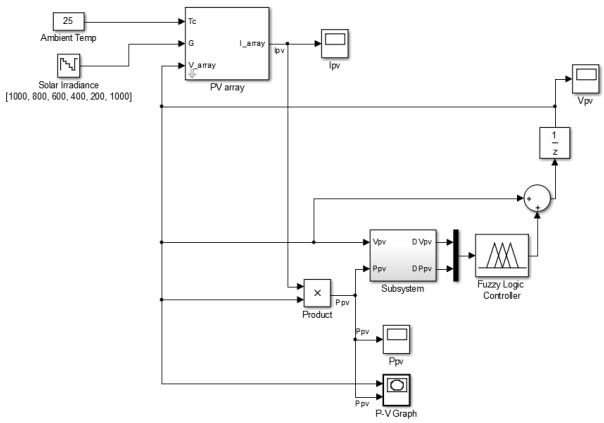

Fig. 11. PV system with Fuzzy Logic control in Simulink

IV. RESULTS

First, a simulation of the three MPPT methods is performed to check which method is the most accurate and responsive to irradiance variations. We assume solar irradiance levels of 1000 W/m^2, 800 W/m^2, 600 W/m^2, 400 W/m^2, 200 W/m^2 and 1000 W/m^2, with 0.1 seconds duration time of each level. A constant temperature of 25 ºC is considered. Although in reality the solar irradiance does not change as fast as in the simulation, we examine fast weather variations so as to observe graphically in a practical (comprehensive) scale the response time that each method needs to reach the MPP.

The PV voltage, current and power are shown in Fig. 12, Fig. 13 and Fig. 14, respectively, for the three different studied MPPT techniques. Concerning the P&O algorithm, we observe that the corresponding voltage, current and power are reached in all cases, and there is an oscillation until the next change of irradiance. The oscillation is more obvious for the case of the voltage representation (Fig. 12). The incremental conductance method has the same features and results with that of the P&O method. On the other hand, the fuzzy logic controller reacts much faster to variations of irradiance and no oscillations exist.

Table III includes several simulation results regarding the transition of the solar irradiance from 200 W/m^2 to 1000 W/m^2 at t = 0.5 s. One can notice that the fuzzy logic method can have certain advantages over the P&O and incremental conductance methods. Specifically, P&O and incremental conductance methods can reach the MPP after 98 ms while fuzzy logic control tracks the MPP after 8 ms. Also, fuzzy logic method presents no oscillations at the steady state period and can track the system to higher power values than the other two methods, leading to higher performance and efficiency.

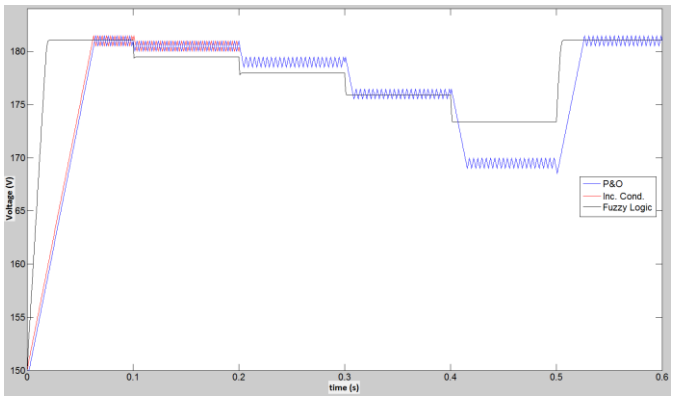

Fig. 12. PV array voltage according to time with P&O (blue), incremental conductance (red) and fuzzy logic control (black)

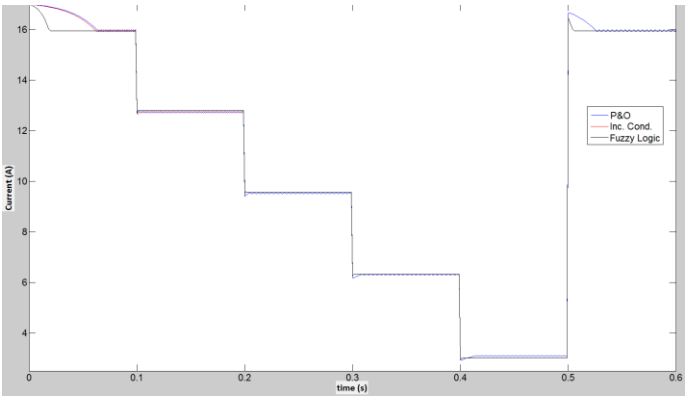

Fig. 13. PV array current according to time with P&O (blue), incremental conductance (red) and fuzzy logic (black) control

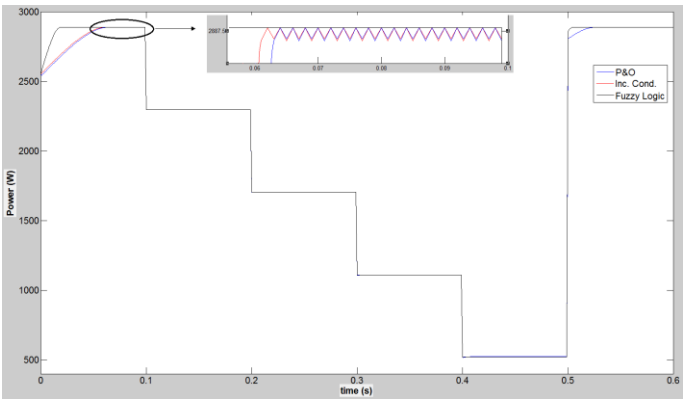

Fig. 14. PV array power according to time with P&O (blue), incremental conductance (red) and fuzzy logic (black) control

Regarding the parameters for P&O and incremental conductance method, the step voltage (*Vstep*) is defined to be 0.5 V. The step-size in these methods must become relatively very large so that their corresponding tracking speed matches that of the fuzzy logic method. For the case of the transition of the solar irradiance from 200 W/m^2 to 1000 W/m^2 (see Table III), the voltage step-size must be increased to 1.5 V to reach the tracking time of 8 ms. However, the use of this large step-size would result into increased oscillation and limited accuracy and efficiency of the model.

TABLE III. COMPARISON TABLE OF STUDIED MPPT METHODS

	P&O	Incremental Conductance	Fuzzy Logic
P_{MPP}	2886.95 W	2886.95 W	2887.55 W
V_{MPP}	181 V	181 V	181.06 V
I_{MPP}	15.95 A	15.95 A	15.948 A
Tracking time	98 ms	98 ms	8 ms

V. CONCLUSIONS

In this paper a model of a PV array along with different MPPT techniques has been developed. Firstly, a mathematical analysis of the PV module is achieved. In addition, three MPPT algorithms have been studied. Specifically, the Perturbation and Observation (P&O) algorithm, the incremental conductance method and a fuzzy logic control have been examined.

The results have shown that the hill climbing methods, namely the P&O and incremental conductance, may fail under rapidly changing climatic conditions. On the other hand, Fuzzy Logic control can track the system to the MPP very fast and accurately, even during rapid variations of atmospheric conditions. Moreover, the P&O and incremental conductance algorithms present oscillations around the MPP at the steady state period, thus energy losses appear. If a smaller perturbation size is used, then the MPP will be reached more slowly. Although P&O has limitations on convergence time and oscillations, it remains the most simple and commonly used method for MPPT. Also, it does not require special hardware requirements and its efficiency is acceptable. Furthermore, incremental conductance has increased hardware requirements compared to the P&O algorithm. Concluding, fuzzy logic has more advantages with regard to the desired MPPT goals than the other two methods, although exhibiting drawbacks with regard to cost requirements and implementation complexity.

A future research goal can be the connection of the studied PV system to the utility grid. As shown in Fig. 15, a DC-DC converter, a DC-AC inverter and a control unit are important to provide an AC voltage that meets the grid requirements for connection and synchronization [27]–[29].

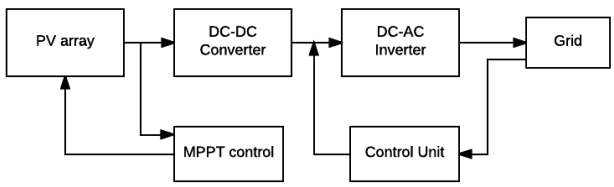

Fig. 15. Block diagram of a basic grid-connected PV system

REFERENCES

[1] REN 21, "Renewables 2017 Global Status Report 2017," Paris, France, 2017.

[2] H. Bellia, R. Youcef, and M. Fatima, "A detailed modeling of photovoltaic module using MATLAB," *NRIAG J. Astron. Geophys.*, vol. 3, no. 1, pp. 53–61, 2014.

[3] N. Pandiarajan and R. Muthu, "Mathematical Modeling of Photovoltaic Module with Simulink," *Int. Conf. Electr. Energy Syst. (ICEES 2011)*, 2011.

[4] N. A. Zainal, Ajisman, and A. R. Yusoff, "Modelling of Photovoltaic Module Using Matlab Simulink," in *IOP Conference Series: Materials Science and Engineering*, 2016, vol. 114, no. 1.

[5] H. Tsai, C. Tu, and Y. Su, "Development of Generalized Photovoltaic Model Using MATLAB / SIMULINK," *Proc. World Congr. Eng. Comput. Sci.*, 2008.

[6] S. Nema, R. K. Nema, and G. Agnihotri, "Matlab / simulink based study of photovoltaic cells / modules / array and their experimental verification," *Int. J. Energy Environ.*, vol. 1, no. 3, pp. 487–500, 2010.

[7] B. Subudhi and R. Pradhan, "A Comparative Study on Maximum Power Point Tracking Techniques for Photovoltaic Power Systems," *IEEE Trans. Sustain. Energy*, vol. 4, no. 1, pp. 89–98, 2013.

[8] H. Rezk and A. M. Eltamaly, "A comprehensive comparison of different MPPT techniques for photovoltaic systems," *Sol. Energy*, vol. 112, pp. 1–11, 2015.

[9] P. I. Muoka, "Control of Power Electronic Interfaces for Photovoltaic Power Systems for Maximum Power Extraction," Ph.D dissertation, University of Tasmania, 2014.

[10] T. Esram and P. L. Chapman, "Comparison of Photovoltaic Array Maximum Power Point Tracking Techniques," *IEEE Trans. Energy Convers.*, vol. 22, no. 2, pp. 439–449, 2007.

[11] L. Qin and X. Lu, "Matlab/Simulink-Based Research on Maximum Power Point Tracking of Photovoltaic Generation," *Phys. Procedia*, vol. 24, pp. 10–18, 2012.

[12] M. G. Villalva, J. R. Gazoli, and E. R. Filho, "Comprehensive approach to modeling and simulation of photovoltaic arrays," *IEEE Trans. Power Electron.*, vol. 24, no. 5, pp. 1198–1208, 2009.

[13] J. Ramos Hernanz, J. J. Campayo Martín, I. Zamora Belver, J. Larrañaga Lesaka, E. Zulueta Guerrero, and E. Puelles Pérez, "Modelling of photovoltaic module," *Int. Conf. Renew. Energies Power Qual. Granada, Spain*, vol. 1, no. 8, 2010.

[14] Luxor, "Photovoltaic module Eco Line 60/230-250W, LX-250P." .

[15] F. Adamo, F. Attivissimo, A. Di Nisio, A. M. L. Lanzolla, and M. Spadavecchia, "Parameters Estimation for a Model of Photovoltaic Panels," *XIX IMEKO World Congr. Fundam. Appl. Metrol. Lisbon, Port.*, 2009.

[16] N. M. A. A. Shannan, N. Z. Yahaya, and B. Singh, "Single-Diode Model and Two-Diode Model of PV Modules : A Comparison," *Proc. - 2013 IEEE Int. Conf. Control Syst. Comput. Eng. ICCSCE 2013*, pp. 210–214, 2013.

[17] H. B. Vika, "Modelling of Photovoltaic Modules with Battery Energy Storage in Simulink / Matlab," Master dissertation, Norwegian Univ. of Science and Technology (NTNU), 2014.

[18] S. Umashankar, K. P. Aparna, R. Priya, and S. Suryanarayanan, "Modeling and Simulation of a PV System using DC-DC Converter," *Int. J. Latest Res. Eng. Technol.*, vol. 1, no. 2, pp. 9–16, 2015.

[19] M. C. Argyrou, P. Christodoulides, C. C. Marouchos, and S. A. Kalogirou, "A Grid-connected Photovoltaic System: Mathematical Modeling using MATLAB/Simulink," in *52nd International Universities' Power Engineering Conference (UPEC)*, 2017.

[20] F. Liu, S. Duan, F. Liu, B. Liu, and Y. Kang, "A Variable Step Size INC MPPT Method for PV Systems," *IEEE Trans. Ind. Electron.*, vol. 55, no. 7, pp. 2622–2628, 2008.

[21] Y. Soufi, M. Bechouat, S. Kahla, and K. Bouallegue, "Maximum power point tracking using fuzzy logic control for photovoltaic system," in *3rd International Conference on Renewable Energy Research and Application (ICRERA)*, 2014.

[22] J. K. Shiau, Y. C. Wei, and B. C. Chen, "A study on the fuzzy-logic-based solar power MPPT algorithms using different fuzzy input variables," *Algorithms*, vol. 8, no. 2, pp. 100–127, 2015.

[23] A. M. Z. Alabedin, E. F. El-Saadany, and M. M. A. Salama, "Maximum power point tracking for Photovoltaic systems using fuzzy logic and artificial neural networks," in *Power and Energy Society General Meeting*, 2011.

[24] S. Narendiran, S. K. Sahoo, R. Das, and A. K. Sahoo, "Fuzzy Logic Controller based Maximum Power Point Tracking for PV System," in *3rd International Conference on Electrical Energy Systems (ICEES)*, 2016.

[25] S. Karthika, K. Velayutham, P. Rathika, and D. Devaraj, "Fuzzy Logic Based Maximum Power Point Tracking Designed for 10kW Solar Photovoltaic System with Different Membership Functions," *Int. J. Electr. Comput. Energ. Electron. Commun. Eng.*, vol. 8, no. 6, pp. 1013–1018, 2014.

[26] A. M. Othman, M. M. M. El-arini, A. Ghitas, and A. Fathy, "Realworld maximum power point tracking simulation of PV system based on Fuzzy Logic control," *NRIAG J. Astron. Geophys.*, vol. 1, no. 2, pp. 186–194, 2012.

[27] S. S. Raghuwanshi and K. Gupta, "Modeling of a single-phase grid-connected photovoltaic system using MATLAB/Simulink," in *IEEE International Conference on Computer Communication and Control, IC4 2015*, 2015.

[28] A. Panda, M. K. Pathak, and S. P. Srivastava, "A single phase photovoltaic inverter control for grid connected system," *Sadhana*, vol. 41, no. 1, pp. 15–30, 2016.

[29] S. M. A. Faisal, "Model of Grid Connected Photovoltaic System Using MATLAB / SIMULINK," *Int. J. Comput. Appl.*, vol. 31, no. 6, 2011.

View publication stats