ResearchGate

See discussions, stats, and author profiles for this publication at: https://www.researchgate.net/publication/344209861

Control of Power Electronic Interface for a Stand- Alone Photovoltaic System

Conference Paper · May 2016

CITATIONS
0

READS
130

1 author:

Evren Isen
Bandırma Onyedi Eylül University

34 PUBLICATIONS **180** CITATIONS

SEE PROFILE

All content following this page was uploaded by Evren Isen on 11 September 2020.

The user has requested enhancement of the downloaded file.

Control of Power Electronic Interface for a Stand-Alone Photovoltaic System

Evren Isen[27]

Abstract

This paper presents a single-phase stand-alone PV system. The system includes ten PV panels that are connected in series and parallel. Each panel has 260W power and 38.3V open circuit voltage. Five panels are connected in series, thus 192V output voltage can be obtained. The total system power is 2.6 kW in ideal standard test conditions, 1000 W/m^2 and 25^{0}C. A DC/DC converter is used for maximum power point tracking (MPPT). It controls the output power of panels. The extracted power from PV panels is injected into DC-link that includes batteries. In the next stage of the system, a single-phase inverter is utilized to feed the local load. It is controlled with sinusoidal pulse width modulation technique to regulate the output voltage. At the output stage, a transformer increases the inverter output voltage to required load voltage level and provides galvanic isolation. The system is investigated for energy efficiency and load energy sustainability with different input power values. Protection parameters of DC/DC converter and inverter are used to investigate the system. The sinusoidal voltage is produced by inverter at the output for the load while the input power is at sufficient level. It is seen that the output energy and the input energy are interrupted because of unbalance power flow. The investigation shows that MPPT controller and inverter selection has important role for system energy efficiency and energy sustainability of the load.

Keywords: MPPT, photovoltaic system, stand-alone inverter.

54. INTRODUCTION

Alternative energy sources such as solar and wind energy has becoming steadily more popular due to diminishing of fossil fuels, increasing of CO_2 emission and energy demand. Therefore, grid-connected and stand-alone photovoltaic (PV) systems are installed to support the power network and to supply the energy to rural areas that are far away from power network. The total installed capacity at the end of 2015 is reached to 227,1 GW in the world. China, Germany, Japan, USA and Italy are the first countries that have the most cumulative capacities with 43,6 GW, 39,37 GW, 34,4 GW, 25,6 GW and 18,9 GW, respectively. Turkey has installed 208 MW PV system in 2015. The evolution of PV installation in 2000-2015 is seen in Figure 18 [1]. As seen from the figure, PV system installation increases steadily in the world.

In the literature there are many studies based on stand-alone and grid-connected PV systems. In this study, a single-phase stand-alone PV system that provides energy to residential house is presented. Different topologies are installed in PV systems [2]. A DC-DC buck converter is used to charge the battery, and another DC-DC Boost converter provides maximum power point tracking (MPPT) and charges the DC-link. An inverter injects the energy to the load and grid from DC-link. At the output stage, a transformer is utilized in case of grid connection [3]. A cascaded multilevel inverter includes DC-DC converter with high frequency transformer is used for isolation and to reduce the transformer size and total harmonic distortion of output voltage [4].

Maximum power point tracking is the most important point in PV systems. Different algorithms are used for this issue [5], [6]. Widely used methods are perturb and observe (P&O) and incremental conductance in the literature. P&O algorithm is also called ―hill-climbing" and widely used in stand-alone PV systems because of its simplicity. In this method, the last perturbation and the last sign of power increment are used to determine the next step. If the power difference is positive, the perturbation should be kept in the same direction [7], [8]. Otherwise, direction should be changed. It continues to the maximum power point. The other method, incremental conductance, checks the slope of the power vs. voltage (current) curve. The point that has zero slope of the curve indicates the maximum power extraction [9], [10]. Furthermore, fuzzy and neural based MPPT algorithms are used to improve the performance [11]-[15].

[27] *Corresponding author: Kirklareli University, Department of Electrical & Electronics Engineering, Kirklareli, Turkey.*
evren.isen@klu.edu.tr

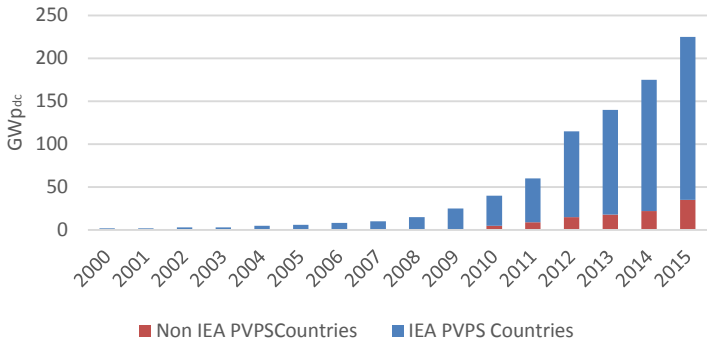

Figure 18. Evolution of PV Installation [1]

In this study, single-phase stand-alone PV system is simulated for different radiation values. A DC/DC buck converter is utilized to control the output power of panels for MPPT. The energy extracted from panels is stored in battery, and it is used to produce AC output voltage by an inverter. At the output stage, a transformer is utilized to increase the voltage that is required for the load. The MPPT control and inverter is controlled with voltage protection parameters to investigate system energy efficiency and load energy sustainability.

55. SYSTEM TOPOLOGY AND CONTROL PRINCIPLE

The proposed single-phase stand-alone PV system is given in Figure 19. The system is fed by ten PV panels. There are two parallel connected groups, and each includes five serial connected panels. Therefore, total output voltage and current are increased. The electrical specifications of PV panels are given in Table 7. Each panel has 260 W_p power in theoretically. Therefore, the total output power reaches to 2.6 kW. The electrical characteristic of the panel is given in Figure 20. As seen from the figure, output power changes depending on the panel voltage, thus maximum power point tracking algorithm is used in converter control.

Table 7.Electrical specifications of PV panel (KU260-6MCA)

Parameter	Value	Unit
P_{max}	260	W
V_{mp}	31	V
I_{mp}	8.39	A
V_{oc}	38.3	V
I_{sc}	9.09	A

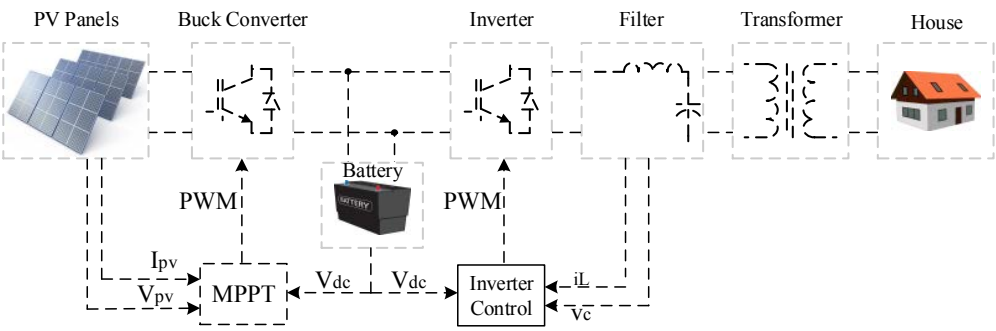

Figure 19. Block diagram of the system

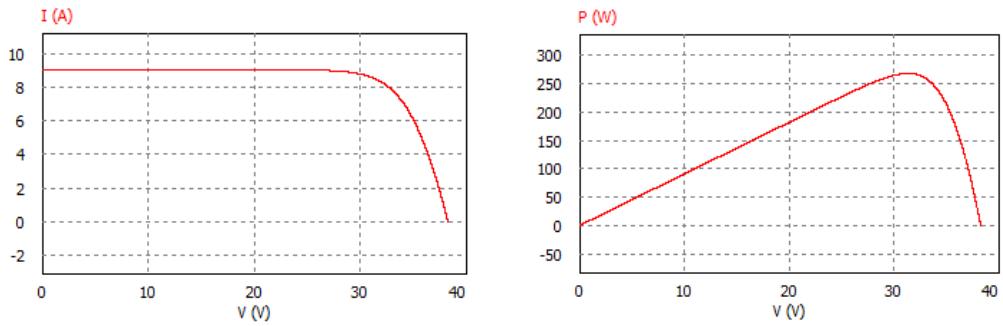

a) V x I *b) V x P*

Figure 20. Output characteristics of a PV panel

PV systems have several power electronics converter to control the power flow. In the proposed system, there are two converters. A DC/DC buck converter is utilized at the output of PVs. It controls the power extraction from panels depending on MPPT algorithm. Therefore, the maximum power can be produced although the weather conditions change, such as temperature and radiation. The algorithm calculates the maximum power for the different weather conditions. It is used in buck converter control. Topology of the buck converter is seen in Figure 21. The semiconductor switch is controlled by DC-PWM. As converter controls the output power of panels, reference value is adjusted in MPPT algorithm. Duty cycle is changed depending on the reference voltage to ensure MPPT.

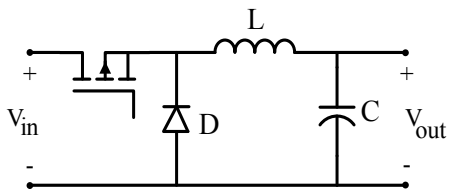

Figure 21. DC/DC buck converter

The converter is controlled by DC-PWM, and reference value is adjusted with P&O algorithm for MPPT. The algorithm flowchart is given in Figure 22. This algorithm is widely used for stand-alone applications because of its simple implementation. Output voltage and current of panels are measured to calculate instantaneous power. The difference between the instantaneous and previous sampled value of voltage and power is calculated. Duty cycle of semiconductor switch is changed depending on the state of output power and voltage to control the output voltage. The duty cycle (D) is increased or decreased by ΔD as seen in Figure 22.

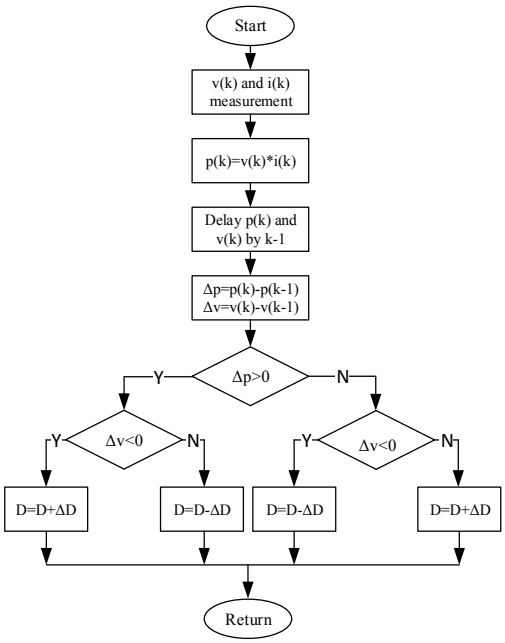

Figure 22. P&O algorithm flowchart

Third stage of the system includes storage elements. The energy extracted from panels is injected to DC-link that includes battery. The battery supplies energy to the system when solar energy is not enough for the load. It also feeds the load when the

buck converter stops running because of operating principle. The battery voltage in the system is 24V. A bulky capacitor is used for modelling of the battery.

The DC energy stored in batteries is injected to the load via an inverter and a transformer. Single-phase four-switch inverter is utilized after the DC-link. Inverter converters the DC voltage to AC voltage. The topology of the inverter is seen in Figure 23. Output of the inverter is filtered by LC filter. Inductor filters the AC current while capacitor filters the AC output voltage. The output of the system is connected to load via transformer. It provides the required voltage to the load boosting the capacitor voltage.

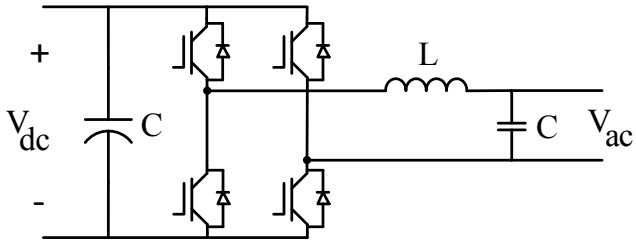

Figure 23. Single-phase inverter

56. SIMULATION STUDY

The proposed single-phase stand-alone PV system is simulated in PSIM. The schematic is seen in Figure 24. PV panels block consists of ten panels that includes two groups. Each group has five series connected panel, and two groups are connected in parallel. The second block is buck converter that controls the PV panel power. The operating principle of the converter to extract maximum power from PV panels. Additionally, it has parameters for battery protection. In PV system converter market, there are many MPPT controllers, and they have different protection parameters. In the proposed system, the protection parameters of the controller (buck converter) are 27.8 V and 25 V. If battery voltage reaches to 27.8V, the controller stops working to protect the battery. In this state, power demand of the load is smaller than the sum of produced power from panels and battery power. When the controller stops, load power is supplied from battery. Therefore, battery voltage decreases to 25 V, and it runs again at this voltage. The simulation result for this state is seen in Figure 25. In the first 7 ms, output power of panels increases to 2.6 kW, while 2 kW load is fed by battery. Therefore, battery voltage decreases to 25.5 V from 26 V. After that time, as the produced PV power is higher than the load voltage, battery voltage starts increasing. When the battery voltage reaches to 27.8 V, controller stop working, thus output power of panels decreases to zero. While buck converter does not run, load power is supplied from battery. It causes a decreasing at the battery voltage to 25 V. At the last interval, controller operates again when the battery voltage is 25 V. Therefore, battery starts to be charged again. In the time interval that MPPT controller does not operate, the energy can be produced from PV panels does not be used. It decreases the energy efficiency.

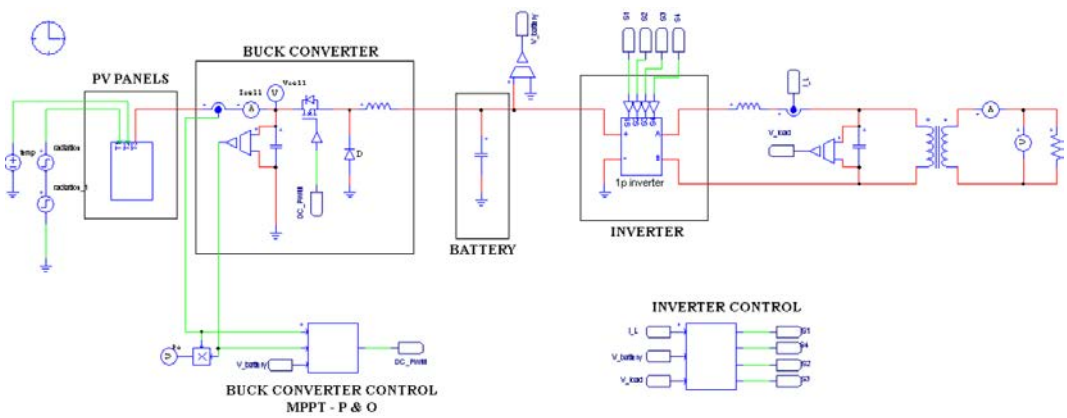

Figure 24. System simulation schematic

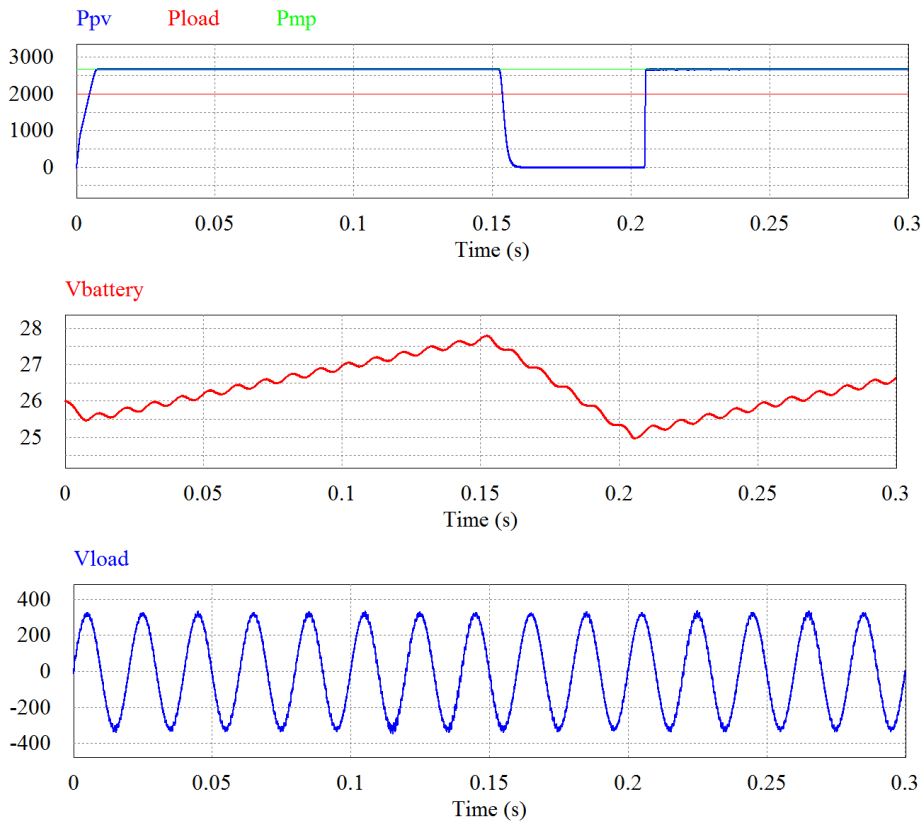

Figure 25. MPPT controller protection principle

Inverter is utilized after DC-link. It converts DC voltage to AC voltage. It regulates the load voltage by SVPWM control technique with current and voltage loops. The battery voltage changes depending on the power balance between input and output. Input power changes with weather conditions such as temperature and radiation. Therefore, inverter control algorithm should be included protection parameters. The lower voltage causes disturbed voltage at the output, and the higher voltage break the semiconductors down of the inverter. The parameters of the inverter in the proposed system are 20.3V shutdown voltage and 25.2V restart voltage. Inverter stops running at 20.3 V and restarts at 25.2 V as seen in Figure 26. When the inverter stops, the load cannot be fed. It affects the energy sustainability negatively.

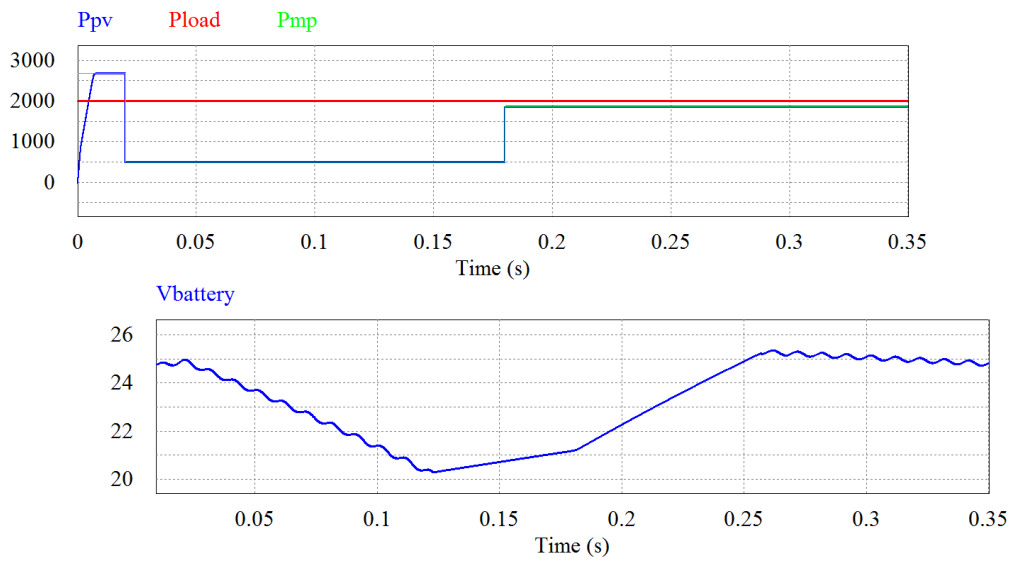

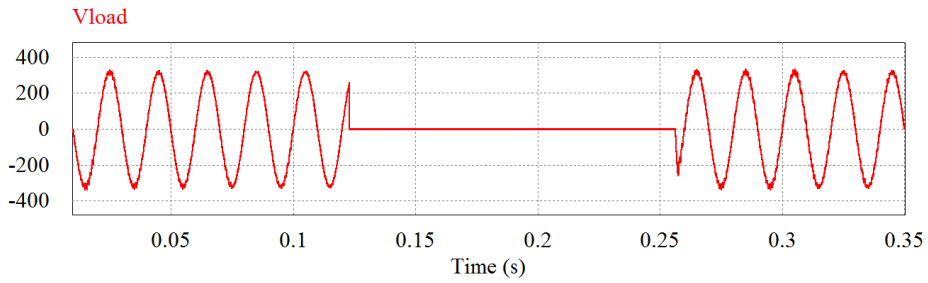

Figure 26. Inverter protection principle

57. CONCLUSIONS

In this study, a single-phase stand-alone PV system that has 2.6 kW power capability is simulated. The system includes a DC/DC buck converter, 24 V battery as a storage element, a single-phase inverter and a transformer. Perturb & Observe maximum power point tracking is implemented with a DC/DC buck converter (MPPT controller). The buck converter and inverter are controlled with DC-PWM and SPWM, respectively. In each converter control principle, battery voltage protection is considered. MPPT controller observes the battery voltage for overvoltage protection. Controller stops working at over voltage 27.8 V and keeps stopping until the voltage decreases to restart voltage 25 V. Inverter control checks the battery voltage for deep charge protection. It stops working to protect the battery and to guarantee the output voltage because inverter needs a specific minimum DC voltage to produce required load voltage. Therefore, inverter stops working at 20.3 V, and restart at 25.2 V. The simulation results shows that load is fed by the system. However, the unbalance power between the input and output power demand affect power flow. It indicates the importance of sizing of the system element. Solar energy capability of the system location and load power demand should be considered in PV panels and battery sizing to guarantee power producing from panels in maximum duration and feeding the load without interruption. The protection parameters of converters also should be taken into account for converter selection.

REFERENCES

[1] PVPS, I., Trends in photovoltaic applications. Survey report of selected IEA countries between 1992 and 2013, Report IEA-PVPS T1-25; 2014.
[2] M. Islam, S. Mekhilef and M. Hasan, ―Single phase transformerless inverter topologies for grid-tied photovoltaic system: a review", Renew. Sustain. Energy Rev., vol. 45, 2015, pp. 69-86.
[3] H. Chaves, J. Grigulo, L. Bertagnolli and L.A.C. Lopes, ―2-stage grid-connected and stand-alone PV inverter implemented with a renewable energy developer's KIT", IEEE International Instrumentation and Measurement Technology Conference, 2014, pp. 631-636.
[4] M. Sadikin, T. Senjyu and A. Yona, ―High-Frequency Link DC for Power Quality Improvement of Stand-Alone PV System in Cascaded Multilevel Inverter", IEEE 10th International Conference on Power Electronics and Drive Systems, 2013, pp. 597-601.
[5] U.S. Patel, D. Sahu and D. Tirkey, ―Maximum Power Point Tracking Using Perturb & Observe Algorithm and Compaare With Another Algorithm", International Journal of Digital Application & Contemporary Research, vol. 2, no. 2, 2013.
[6] T. Esram and P. L. Chapman, ―Comparison of Photovoltaic Array Maximum Power Point Tracking Techniques", IEEE Transactions on Energy Conversion, vol. 22, no. 2, 2007, pp. 439-449.
[7] P. Kinjal, K. B. Shah and G. R. Patel, ―Comparative Analysis of P&O and INC MPPT Algorithm for PV System", International Conference on Electrical, Electronics, Signals, Communication and Optimization, 2015, pp. 1-6.
[8] M. Killi and S. Samanta, ―Modified Perturb and Observe MPPT Algorithm for Drift Avoidance in Photovoltaic Systems", IEEE Transactions on Industrial Electronics, vol. 62, no. 9, 2015, pp. 5549-5559.
[9] P. Q. Dzung, L. D. Khoa and H. H. Lee, ―The New MPPT Algorithm using ANN-Based PV", International Forum on Strategic Technology, 2010, pp. 402-407.
[10] N. E. Zakzouk, M. A. Elsaharty, A. K. Abdelsalam, A. A. Helal and B. W. Williams, ―Improved performance low-cost incremental conductance PV MPPT technique", IET Renewable Power Generation, vol. 10, no. 4, 2016, pp. 561-574.
[11] A. I. Dounis, S. Stavrinidis, P. Kofinas and D. Tseles, ―Fuzzy-PID controller for MPPT of PV system optimized by Big Bang-Big Crunch algorithm", IEEE International Conference on Fuzzy Systems, 2015, pp. 1-8.
[12] M. A. A. M. Zainuri, M. A. M. Radzi, A. C. Soh and N. A. Rahim, ―Development of adaptive perturb and observe-fuzzy control maximum power point tracking for photovoltaic boost dc-dc converter", IET Renewable Power Generation, vol. 8, no. 2, 2014, pp. 183-194.
[13] H. Hassan, M. A. Geliel and M. A. Zeid, ―A Proposed Fuzzy Controller for MPPT of A Photovoltaic System", IEEE Conference on Energy Conversion, 2014, pp. 164-169.
[14] L. Jie and C. Ziran, ―Research on the MPPT Algorithm of Photovoltaic System Based on PV Neural Network", Chinese Control and Decision Conference, 2011, pp. 1851-1854.
[15] L. M. Elobaid, A. K. Abdelsalam and E. E. Zakzouk, ―Artificial neural network-based photovoltaic maximum power point tracking techniques: a survey", IET Renewable Power Generation, vol. 9, no. 8, 2015, pp. 1043-1063.

View publication stats