OBJECTIVES

- Develop an understanding of the concept of frequency response in amplifiers.
- Investigate how RC circuits behave at different frequencies.
- Express gains and attenuations in decibels.
- Plot gain magnitude and phase versus frequency.
- Derive expressions for magnitude and phase in 2-port RC networks.
- Understand the Miller effect in inverting amplifiers.
- Differentiate between frequency response and transient response.

9–1 DEFINITIONS AND BASIC CONCEPTS

The *frequency response* of an electronic device or system is the variation it causes, if any, in the level of its output signal when the frequency of the signal is changed. In other words, it is the manner in which the device *responds* to changes in signal frequency. Variation in the level (amplitude, or rms value) of the output signal is usually accompanied by a variation in the *phase angle* of the output relative to the input, so the term *frequency response* also refers to phase shift as a function of frequency. (Phase shift versus frequency is sometimes called *phase response.*) Figure 9–1 shows an amplifier whose frequency response causes small output amplitudes at both low and high frequencies. Notice that the input signal amplitude is the same at each frequency, but the output signal amplitude changes with frequency. Thus, the *gain* of the amplifier is a function of frequency. In this example, the gain is small at the low frequency and small at the high frequency.

The frequency response of an amplifier is usually presented in the form of a graph that shows output amplitude (or, more often, voltage gain) plotted versus frequency. Phase-angle variation is sometimes plotted on the same graph. Figure 9–2 shows a typical plot of the voltage gain of an ac amplifier versus frequency. Notice that the gain is 0 at dc (zero frequency), then rises as frequency increases, levels off for further increases in frequency, and then begins to drop again at high frequencies.

The frequency range over which the gain is more or less constant ("flat") is called the *midband range*, and the gain in that range is designated A_m. As shown in Figure 9–2, the low frequency at which the gain equals $(\sqrt{2}/2)\,A_m \approx 0.707A_m$ is called the *lower cutoff frequency* and is designated f_L. The high frequency at which the gain once again drops to $0.707A_m$ is called the *upper cutoff frequency* and is designated f_H. The *bandwidth* of the amplifier is defined to be the difference between the upper and lower cutoff frequencies:

$$\text{bandwidth} = \text{BW} = f_H - f_L \tag{9–1}$$

Scanned with CamScanner

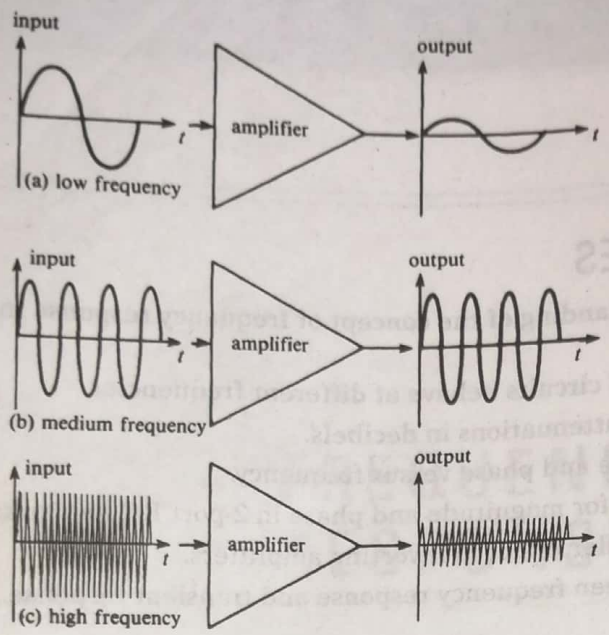

FIGURE 9–1 An amplifier whose frequency response is such that the output signal amplitude is small at both low and high frequencies

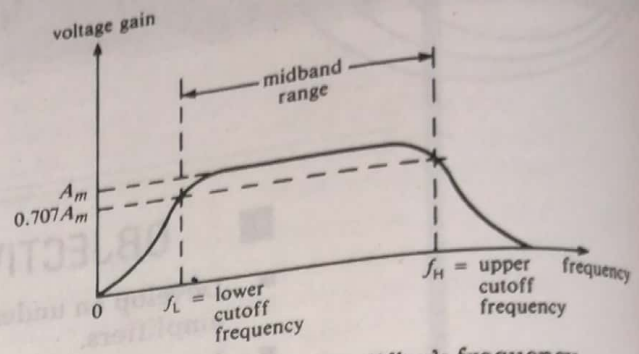

FIGURE 9–2 A typical amplifier's frequency response, showing gain versus frequency

The points on the graph in Figure 9–2 where the gain is $0.707A_m$ are ofte called *half-power points*, and the cutoff frequencies are sometimes calle *half-power frequencies*, because the output power of the amplifier at cutoff i one-half of its output power in the midband range. To demonstrate this fac suppose that an rms output voltage v is developed across R ohms in the mid band range. Then the output power in midband is

$$P_{(midband)} = \frac{v^2}{R} \text{ watts} \tag{9-2}$$

At each of the cutoff frequencies, the output voltage is $(\sqrt{2}/2)v$, so th power is

$$P_{(at\ cutoff)} = \frac{\left(\frac{\sqrt{2}}{2}v\right)^2}{R} = \frac{0.5\,v^2}{R} = 0.5\,P_{(midband)}$$

EXAMPLE 9–1

An audio amplifier has a lower cutoff frequency of 20 Hz and an upper cutof frequency of 20 kHz. (This is the frequency range of sound waves—the audi frequency range.) The amplifier delivers 20 W to a 12-Ω load at 1 kHz.

1. What is the bandwidth of the amplifier?
2. What is the rms load voltage at 20 kHz?
3. What is the rms load voltage at 2 kHz?

Solution

1. $BW = f_H - f_L = 20 \times 10^3 \text{ Hz} - 20 \text{ Hz} = 19{,}980 \text{ Hz}$
2. Since 1 kHz is in the midband range, the midband power is 20 W. At th 20-kHz cutoff frequency, the power is $0.5(20) = 10$ W, so

Scanned with CamScanner

$$\frac{v^2}{12} = 10$$
$$v^2 = 120$$
$$v = \sqrt{120} = 10.95 \text{ V rms}$$

3. Assuming that the load voltage is exactly the same throughout the midband range (not always the case in practice), the output at 2 kHz will be the same as that at 1 kHz, and we can use equation 9–2 with $P = 20$ W to solve for v. Alternatively, the midband voltage equals the voltage at cutoff *divided* by 0.707:

$$v_{(midband)} = \frac{10.95 \text{ V rms}}{0.707} = 15.49 \text{ V rms}$$

Amplitude and Phase Distortion

The signal passed through an ac amplifier is usually a complex waveform containing many different frequency components rather than a single-frequency ("pure") sine wave. For example, audio-frequency signals such as speech and music are combinations of many different sine waves occurring simultaneously with different amplitudes and different frequencies, in the range from 20 Hz to 20 kHz. As another example, any *periodic* waveform, such as a square wave or a triangular wave, can be shown to be the sum of a large number of sine waves whose amplitudes and frequencies can be determined mathematically. In previous discussions, we have analyzed ac amplifiers driven by single-frequency, sine-wave sources. This approach is justified by the fact that signals of all kinds can be regarded as sums of sine waves, as just described, so it is enough to know how an amplifier treats any single sine wave to know how it treats sums of sine waves (by the superposition principle).

In order for an output waveform to be an amplified version of the input, *an amplifier must amplify every frequency component in the signal by the same amount.* For example, if an input signal is the sum of a 0.5-V-rms, 100-Hz sine wave, a 0.2-V-rms, 1-kHz sine wave, and a 0.7-V-rms, 10-kHz sine wave, then an amplifier having gain 10 must amplify each frequency component by 10, so that the output consists of a 5-V-rms, 100-Hz sine wave, a 2-V-rms, 1-kHz sine wave, and a 7-V-rms, 10-kHz sine wave. If the frequency response of an amplifier is such that the gain at one frequency is different than it is at another frequency, the output will be *distorted*, in the sense that it will not have the same shape as the input waveform. This alteration in waveshape is called *amplitude distortion*. Figure 9–3 shows the distortion that results when a triangular waveform is passed through an amplifier having an inadequate frequency response. In this example, the high-frequency components in the waveform fall beyond the upper cutoff frequency of the amplifier, so they are not amplified by the same amount as low-frequency components.

It can be seen that knowledge of the frequency response of an amplifier is important in determining whether it will distort a signal having known frequency components. The bandwidth must cover the entire range of frequency

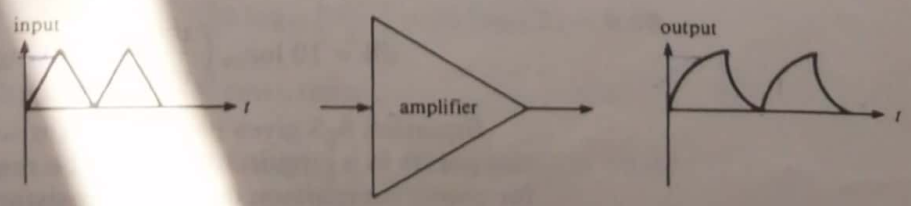

FIGURE 9–3 The output waveform is a distorted version of the input. The amplifier has a frequency response that is inadequate for the frequency components of the input waveform.

Scanned with CamScanner

components in the signal if undistorted amplification is to be achieved. In general, "jagged" waveforms and signals having abrupt changes in amplitude, such as square waves and pulses, contain very broad ranges of frequencies and require wide bandwidth amplifiers.

An amplifier will also distort a signal if it causes components having different frequencies to be shifted by different *times*. For example, if an amplifier shifts one component by 1 ms, it must shift every component by 1 ms. This means that the *phase* shift at each frequency must be proportional to frequency. Distortion caused by failure to shift phase in this way is called *phase distortion*. In most amplifiers, phase distortion occurs at the same frequencies where amplitude distortion occurs because phase shifts are not proportional to frequency outside the midband range.

Amplitude and phase distortion should be contrasted with *nonlinear* distortion, which we discussed in an earlier chapter in connection with the nonuniform spacing of characteristic curves. Nonlinear distortion results when an amplifier's gain depends on signal *amplitude* rather than frequency. The effect of nonlinear distortion is to create frequency components in the output that were not present in the input signal. These new components are integer multiples of the frequency components in the input and are called *harmonic* frequencies. For example, if the input signal were a pure 1-kHz sine wave, the output would be said to contain third and fifth harmonics if it contained 3-kHz and 5-kHz components in addition to the 1-kHz *fundamental*. Such distortion is often called *harmonic distortion*.

9–2 DECIBELS AND LOGARITHMIC PLOTS

Decibels

Frequency-response data are often presented in *decibel* form. Recall that decibels (dB) are the units used to compare two power levels in accordance with the definition

$$\text{dB} = 10 \log_{10} \frac{P_2}{P_1} \tag{9–3}$$

The two power levels, P_1 and P_2, are often the input and output power of a system, respectively, in which case equation 9–3 defines the power gain of the system in decibels. If $P_2 > P_1$, then equation 9–3 gives a *positive* number, and if $P_2 < P_1$, the result *is negative*, signifying a reduction in power. If $P_2 = P_1$, the result is 0 dB, since $\log_{10}(1) = 0$.

Let R_1 be the resistance across which the power P_1 is developed and R_2 be the resistance across which P_2 is developed. Then, since $P = v^2/R$, we have, from equation 9–3,

$$\text{dB} = 10 \log_{10} \frac{(v_2^2/R_2)}{(v_1^2/R_1)} \tag{9–4}$$

where v_2 is the rms voltage across R_2 and v_1 is the rms voltage across R_1. If the resistance values are the *same* at the two points where the power comparison is made ($R_1 = R_2 = R$), then equation 9–4 becomes

$$\text{dB} = 10 \log_{10} \left(\frac{v_2^2/R}{v_1^2/R}\right) = 10 \log_{10} \left(\frac{v_2}{v_1}\right)^2 = 20 \log_{10} \left(\frac{v_2}{v_1}\right) \tag{9–5}$$

Equation 9–5 gives power gain (or loss) in terms of the voltage levels at two points in a circuit, but it must be remembered that the equation is valid for power comparison only if the resistances at the two points are equal. The

Scanned with CamScanner

FIGURE 9–4 (Example 9–2)

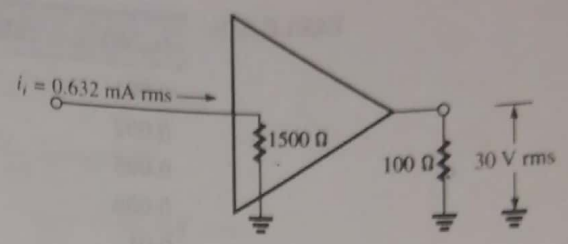

same equation is used to compare voltage levels regardless of the resistance values at the two points. In other words, it is common practice to compute voltage gain as

$$\text{dB(voltage gain)} = 20 \log_{10}\left(\frac{v_2}{v_1}\right) \tag{9–6}$$

If the resistances R_1 and R_2 are equal, then the power gain in dB equals the voltage gain in dB.

EXAMPLE 9–2

The amplifier shown in Figure 9–4 has input resistance of 1500 Ω and drives a 100-Ω load. If the input current is 0.632 mA rms and the load voltage is 30 V rms, find

1. the power gain in dB, and
2. the voltage gain in dB.

Solution

1. $P_i = i_i^2 r_i = (0.632 \times 10^{-3}\text{ A rms})^2(1500\ \Omega) = 0.6\text{ mW}$

$$P_L = \frac{v_L^2}{R_L} = \frac{(30\text{ V rms})^2}{100\ \Omega} = 9\text{ W}$$

From equation 9–3,

$$\text{power gain} = 10 \log_{10}\left(\frac{9\text{ W}}{0.6 \times 10^{-3}\text{ W}}\right) = 10 \log_{10}(15 \times 10^3) = 41.76\text{ dB}$$

2. Since $v_i = i_i r_i = (0.632 \times 10^{-3}\text{ A})(1500\ \Omega) = 0.948\text{ V rms}$, we have from equation 9–6,

$$\text{voltage gain} = 20 \log_{10}\left(\frac{30}{0.948}\right) = 20 \log_{10}(31.645) = 30\text{ dB}$$

It is helpful to remember that a 2-to-1 change in voltage corresponds to approximately ± 6 dB, and a 10-to-1 change corresponds to ±20 dB. The sign (±) depends on whether the change represents an increase or a decrease in voltage. Suppose, for example, that $v_1 = 8$ V rms. If this voltage is doubled ($v_2 = 16$ V rms), then

$$20 \log_{10}\left(\frac{16}{8}\right) = 20 \log_{10}(2) \approx 6\text{ dB}$$

If v_1 is halved ($v_2 = 4$ V rms), then

$$20 \log_{10}\left(\frac{4}{8}\right) = 20 \log_{10}(0.5) \approx -6\text{ dB}$$

Scanned with CamScanner

TABLE 9–1

(v_2/v_1)	dB = 20 $\log_{10}(v_2/v_1)$	(v_2/v_1)	dB = 20 $\log_{10}(v_2/v_1)$
0.001	− 60	2	6
0.002	− 54	4	12
0.005	− 46	8	18
0.008	− 42	10	20
0.01	− 40	20	26
0.02	− 34	40	32
0.05	− 26	80	38
0.08	− 22	100	40
0.1	− 20	200	46
0.2	− 14	400	52
0.5	− 6	800	58
0.8	− 2	1000	60
1.0	0		

If v_1 is increased by a factor of 10 (v_2 = 80 V rms), then

$$20 \log_{10}\left(\frac{80}{8}\right) = 20 \log_{10}(10) = 20 \text{ dB}$$

If v_1 is reduced by a factor of 10 (v_2 = 0.8 V rms), then

$$20 \log_{10}\left(\frac{0.8}{8}\right) = 20 \log_{10}(0.1) = -20 \text{ dB}$$

Every time a voltage is doubled, an additional 6 dB is *added* to the voltage gain, and every time it is increased by a factor of 10, an additional 20 dB is added to the voltage gain. For example, a gain of 100 = 10 × 10 corresponds to 40 dB, and a gain of 4 = 2 × 2 corresponds to 12 dB. As another example, a gain of 400 = 2 × 2 × 10 × 10 corresponds to (6 + 6 + 20 + 20) dB = 52 dB. Similarly, a reduction in voltage by a factor of 0.05 = (1/2)(1/10) corresponds to −6 − 20 = −26 dB. Common logarithms (base 10) can be computed on scientific-type calculators, and the reader should become familar with the calculator's use for that purpose and for computing inverse logarithms. For reference and comparison purposes, Table 9–1 shows the decibel values corresponding to some frequently encountered ratios between 0.001 and 1000.

EXAMPLE 9–3

The input voltage to an amplifier is 4 mV rms. At point 1 in the amplifier, the voltage gain with respect to the input is − 4.2 dB, and at point 2 the voltage gain with respect to point 1 is 18.5 dB. Find

1. the voltage at point 1,
2. the voltage at point 2, and
3. the voltage gain in dB at point 2 with respect to the input.

Solution

Let v_i = the input voltage (4×10^{-3} V rms), v_1 = the rms voltage at point 1, and v_2 = the rms voltage at point 2.

1. $20 \log_{10}\left(\frac{v_1}{4 \times 10^{-3}}\right) = -4.2$

Scanned with CamScanner

$$\log_{10}\left(\frac{v_1}{4 \times 10^{-3}}\right) = -0.21$$

Taking the inverse log (antilog) of both sides,

$$\frac{v_1}{4 \times 10^{-3}} = 0.617$$

$$v_1 = 2.46 \text{ mV rms}$$

On most scientific calculators, the inverse log of -0.21 can be computed directly by entering a sequence such as -0.21, *inverse, log;* it can also be found on a calculator having the y^x function by computing $10^{-0.21}$. Many calculators have the function 10^x in addition to y^x.

2. $$20 \log_{10}\left(\frac{v_2}{2.466 \times 10^{-3}}\right) = 18.5$$

$$\log_{10}\left(\frac{v_2}{2.466 \times 10^{-3}}\right) = 0.925$$

$$v_2 = 2.466 \times 10^{-3} \text{ antilog } (0.925) = 20.75 \text{ mV rms}$$

3. $$\text{voltage gain} = 20 \log_{10}\left(\frac{v_2}{v_i}\right) = 20 \log_{10}\left(\frac{20.75 \times 10^{-3}}{4 \times 10^{-3}}\right) = 14.3 \text{ dB}$$

Notice that this result is the same as -4.2 dB + 18.5 dB; the overall gain in dB is the *sum* of the intermediate dB gains.

It must be remembered that decibels are derived from a *ratio* and therefore represent a comparison of one voltage or power level to another. It is correct to speak of voltage or power *gain* in terms of decibels, but it is meaningless to speak of output *level* in dB, unless the reference level is specified. Popular publications and the broadcast media frequently abuse the term *decibel* because no reference level is reported. Do not be confused by this practice.

It is common practice in some technical fields to use one standard reference level for all decibel computations. For example, the power level 1 mW is used extensively as a reference. When the reference is 1 mW, the decibel unit is written dBm:

$$\text{dBm} = 10 \log_{10}\left(\frac{P}{10^{-3}}\right) \tag{9–7}$$

Note that 0 dBm corresponds to a power level of 1 mW. Another standard reference is 1 W:

$$\text{dBW} = 10 \log_{10}\left(\frac{P}{1}\right) = 10 \log_{10} P \tag{9–8}$$

When the voltage reference is 1 V, voltage gain in decibels is written dBV:

$$\text{dBV} = 20 \log_{10}\left(\frac{V}{1}\right) = 20 \log_{10} V \tag{9–9}$$

The *neper* is a logarithmic unit based on the natural log (ln) of a ratio:

$$A_p \text{ (nepers)} = \frac{1}{2} \ln\left(\frac{P_2}{P_1}\right) \tag{9–10}$$

Scanned with CamScanner

$$A_v(\text{nepers}) = \ln\left(\frac{v_2}{v_1}\right)$$

Semilog and Log-Log Plots

It is a convenient and widely followed practice to plot the logarithm of frequency-response data rather than actual data values. If the logarithm of frequency is plotted along the horizontal axis, a wide frequency range can be displayed on a convenient size of paper without losing resolution at the low-frequency end. For example, if it were necessary to scale frequencies directly on average-sized graph paper over the range from 1 Hz to 10 kHz, each small division might represent 100 Hz. It would then be impossible to plot points in the range from 1 Hz to 10 Hz, where the lower cutoff frequency might well occur. When the horizontal scale represents logarithms of frequency values, the low-frequency end is expanded and the high-frequency end is compressed.

One way in which a logarithmic frequency scale can be obtained is to compute the logarithm of each frequency and then label conventional graph paper with those logarithmic values. An easier way is to use specially designed *log paper*, on which coordinate lines are logarithmically spaced. It is then necessary only to label each line directly with an actual frequency value. If only one axis of the graph paper has a logarithmically spaced scale and the other has conventional linear spacing, the paper is said to be *semilog* graph paper. If both the horizontal and vertical axes are logarithmic, it is called *log-log* paper.

Any 10-to-1 range of values is called a *decade*. For example, each of the frequency ranges 1 Hz to 10 Hz, 10 kHz to 100 kHz, 500 Hz to 5 kHz, and 0.02 Hz to 0.2 Hz is a decade. Figure 9–5 shows a sample of log-log graph paper on which two full decades can be plotted along each axis. This sample is called *2-cycle-by-2-cycle*, or simply 2×2, log-log paper. Log-log graph paper is available with different numbers of decades along each axis, including 4×2, 5×3, 3×3, and so forth. Notice that each decade along each axis occupies the same amount of space. Several horizontal and vertical decades are identified on the figure. Notice also that the graph paper is printed with identical scale values along each decade. The user must relabel the divisions in accordance with the actual decade values that are appropriate for the data to be plotted. Suppose, for example, that the gain of an amplifier varies from 2 to 60 over the frequency range from 150 Hz to 80 kHz. Then the frequency axis must cover the three decades 100 Hz to 1 kHz, 1 kHz to 10 kHz, and 10 kHz to 100 kHz, and the gain axis must cover the two decades 1 to 10 and 10 to 100. 3×2 graph paper would be required. In Figure 9–5, the axes are arbitrarily labeled with decades 0.1–1 and 1–10 (vertical) and 10–100 and 100–1000 (horizontal).

An *octave* is any 2-to-1 range of values, such as 5–10, 80–160, and 1000–2000. Notice in Figure 9–5 that every octave occupies the same length. Notice also that the value *zero* does not appear on either axis of the figure. Zero can never appear on a logarithmic scale, no matter how many decades are represented, because $\log(0) = -\infty$.

Semilog graph paper is used to plot gain in dB versus the logarithm of frequency. When the frequency axis is logarithmic and the vertical axis is linear with its divisions labeled in decibels, the graph paper is essentially the same as log-log paper. Thus, a plot of an amplifier's frequency response will have the same general shape when constructed on either type of graph paper. Semilog graph paper is also used to plot phase shift on a linear scale versus the logarithm of frequency. Graphs of frequency

Scanned with CamScanner

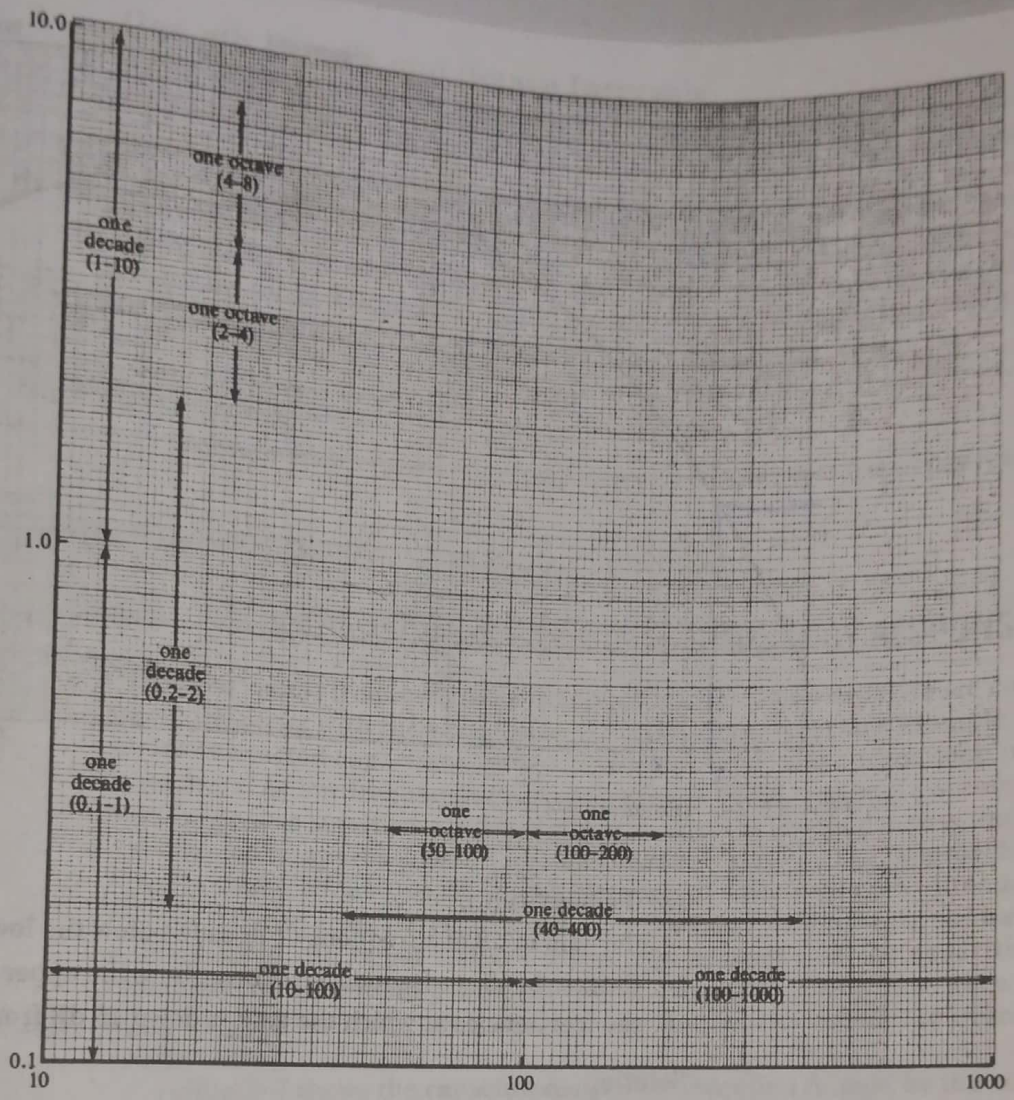

FIGURE 9–5 2-cycle-by-2-cycle (2 × 2) log-log graph paper, showing some typical octaves and decades along each axis

response plotted against the logarithm of frequency are called *Bode* (pronounced bō-dē) *plots.*

The cutoff frequency is the frequency at which the gain on a frequency-response plot is 3 dB less than the midband gain. At cutoff, the gain is said to be "3 dB down," and the cutoff frequencies are often called *3-dB frequencies.* The value is 3 dB because the output voltage is 0.707 times its value at midband, and

$$20 \log_{10}\left[\frac{(0.707)v_m}{v_m}\right] = 20 \log_{10}(0.707) \approx -3 \text{ dB} \qquad (9\text{–}11)$$

where v_m = the midband voltage.

EXAMPLE 9–4

Figure 9–6 shows the voltage gain of an amplifier plotted versus frequency on log-log paper. Find

1. the midband gain, in dB,
2. the gain in dB at the cutoff frequencies,

Scanned with CamScanner

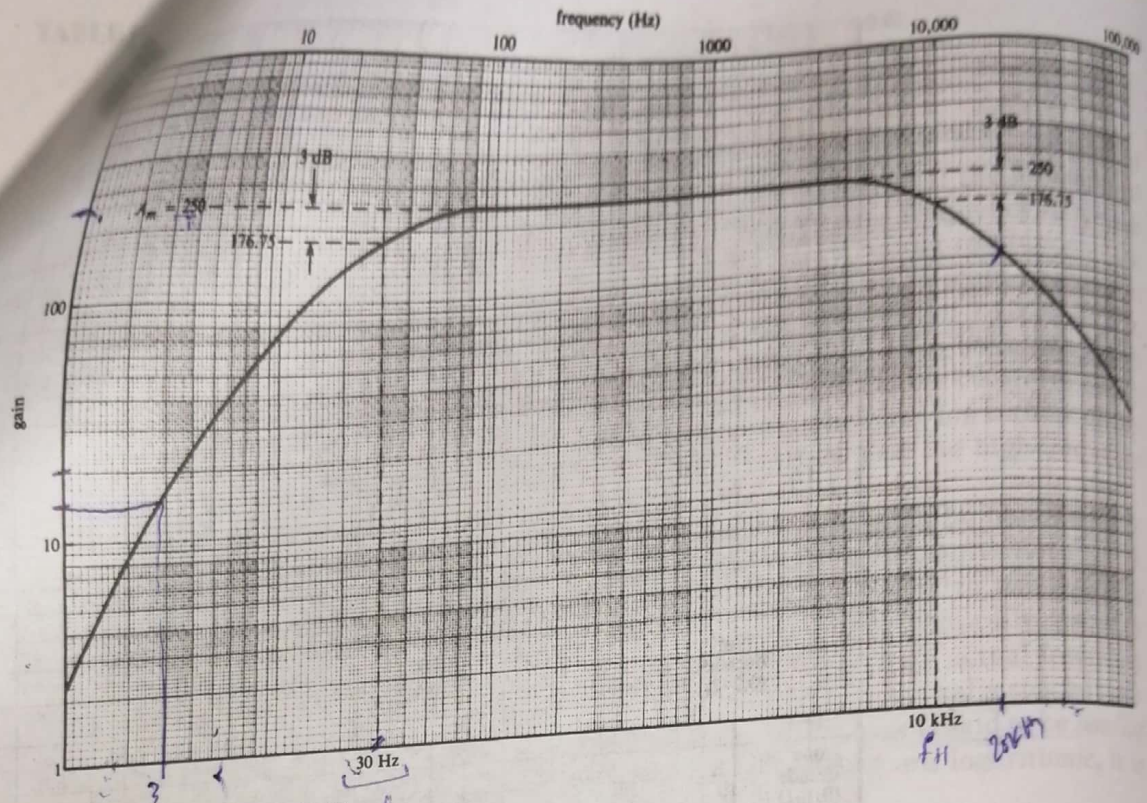

FIGURE 9–6 (Example 9–4)

3. the bandwidth,
4. the gain in dB at a frequency 1 decade below the lower cutoff frequency,
5. the gain in dB at a frequency 1 octave above the upper cutoff frequency, and
6. the frequencies at which the gain is down 15 dB from its midband value.

Solution

1. As shown in Figure 9–6, the magnitude of the midband gain is 250. Therefore, $A_m = 20 \log_{10} 250 = 47.96$ dB $\approx$ 48 dB.
2. Because the gain at each cutoff frequency is 3 dB less than the gain at midband, A_v(at cutoff) = 48 − 3 = 45 dB.
3. The magnitude of the gain at each cutoff frequency is (0.707)250 = 176.8. As shown in Figure 9–6, this value of gain is reached at f_L = 30 Hz and at f_H = 10 kHz. Therefore, BW = $f_H - f_L$ = (10 kHz) − (30 Hz) = 9970 Hz.
4. The frequency 1 decade below f_L is $(0.1)f_L$ = 3 Hz. From Figure 9–6, the magnitude of the gain at this frequency is approximately 15, so A_v = $20 \log_{10} 16$ = 24.1 dB.
5. The frequency 1 octave above f_H is 2 f_H = 20 kHz. From Figure 9–6, the magnitude of the gain at 20 kHz is approximately 105, so $A_v = 20 \log_{10} 105$ = 40.4 dB.
6. The gain 15 dB below midband is (48 dB) − (15 dB) = 33 dB.

$$20 \log_{10} A_v = 33$$
$$\log_{10} A_v = 1.65$$
$$A_v = \text{antilog}(1.65) = 44.7$$

From Figure 9–6, the frequencies at which A_v = 44.7 are approximately 6.5 Hz and 50 kHz.

Scanned with CamScanner

One-*n*th Decade and Octave Intervals

In many practical investigations, including computer-generated frequency-response data, it is necessary to specify logarithmic frequency intervals within one decade or within one octave. For example, we may want ten logarithmically spaced frequencies within one decade. These frequencies are said to be at *one-tenth decade* intervals. Similarly, three logarithmically spaced frequencies in one octave are said to be at *one-third octave* intervals. The frequencies in one-*n*th decade intervals beginning at frequency f_1 are

$$10^x, 10^{x+(1/n)}, 10^{x+(2/n)}, 10^{x+(3/n)}, \ldots$$

where $x = \log_{10} f_1$.

The frequencies in one-*n*th octave intervals beginning at frequency f_1 are

$$2^x, 2^{x+(1/n)}, 2^{x+(2/n)}, 2^{x+(3/n)}, \ldots$$

where $x = \log_2 f_1$.

9–3 SERIES CAPACITANCE AND LOW-FREQUENCY RESPONSE

The lower cutoff frequency of an amplifier is affected by capacitance connected in *series* with the signal flow path. The most important example of series-connected capacitance is the amplifier's input and output coupling capacitors. At low frequencies, the reactance of these capacitors becomes very large, so a significant portion of the ac signal is dropped across them. As frequency approaches 0 (dc), the capacitive reactance approaches infinity (open circuit), so the coupling capacitors perform their intended role of blocking all dc current flow. In previous discussions, we have assumed that the signal frequency was high enough that the capacitive reactance of all coupling capacitors was negligibly small, but we will now consider how large reactances at low frequencies affect the overall voltage gain.

Figure 9–7 shows the capacitor-resistor combination formed by the coupling capacitor and the input resistance at the input side of an amplifier. We omit consideration of any signal-source resistance for the moment. Notice that r_i and the capacitive reactance of C_1 form a voltage divider across the amplifier input. The amplifier input voltage, v_i, is found from the voltage-divider rule:

$$v_i = \left(\frac{r_i}{r_i - jX_{C_1}}\right) v_S \tag{9–12}$$

where $X_{C_1} = \dfrac{1}{\omega C_1}$ ohms

$\omega = 2\pi f$ radians/second

From equation 9–12, we can determine the *magnitude* (amplitude) of v_i, which we will designate $|v_i|$, as a function of ω:

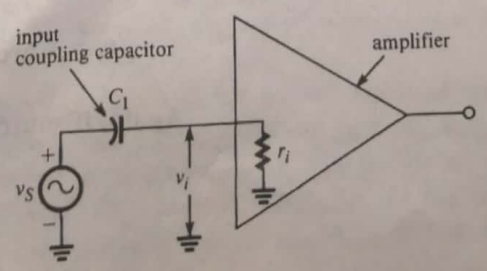

FIGURE 9–7 The input resistance of the amplifier and the coupling capacitor form an RC network that reduces the amplifier's input signal at low frequencies

Scanned with CamScanner

$$|v_i| = \frac{r_i}{\sqrt{r_i^2 + X_{C_1}^2}}|v_S| = \frac{r_i}{\sqrt{r_i^2 + \left(\frac{1}{\omega C_1}\right)^2}}|v_S| = \frac{1}{\sqrt{1 + \left(\frac{1}{\omega r_i C_1}\right)^2}}|v_S| \tag{9–13}$$

Equation 9–13 shows that $|v_i| = 0$ when $\omega = 0$ (dc) and that $|v_i|$ approaches $|v_S|$ in value as ω becomes very large. At the frequency $\omega = 1/(r_i C_1)$ rad/s, we have, from equation 9–13,

$$|v_i| = \frac{1}{\sqrt{1+1}}|v_S| = \frac{1}{\sqrt{2}}|v_S| = 0.707|v_S|$$

This result shows that the amplifier input voltage falls to 0.707 times the source voltage when the frequency is reduced to $1/(r_i C_1)$ rad/s. Therefore, if there are no other frequency-sensitive components affecting the signal level, the overall gain from source to output is 0.707 times its midband value, meaning that $1/(r_i C_1)$ rad/s is the lower cutoff frequency. It is an exercise at the end of this chapter to show that the lower cutoff frequency is the frequency at which the capacitive reactance, X_{C_1}, equals the resistance, r_i.

If source resistance r_S is present, then equation 9–13 becomes

$$|v_i| = \left(\frac{r_i}{r_S + r_i}\right)\frac{1}{\sqrt{1 + \left[\frac{1}{\omega(r_S + r_i)C_1}\right]^2}} \tag{9–14}$$

and the lower cutoff frequency is

$$\omega_L = \frac{1}{(r_i + r_S)C_1} \tag{9–15}$$

or

$$f_L = \frac{1}{2\pi(r_i + r_S)C_1} \tag{9–16}$$

The cutoff frequency defined by equations 9–15 and 9–16 is the frequency at which the ratio $|v_i|/|v_S|$ is 0.707 times its *midband* value, namely, 0.707 times $r_i/(r_S + r_i)$. The ratio $|v_i|/|v_S|$ can be written in terms of the cutoff frequency f_L and the signal frequency f as follows:

$$\frac{|v_i|}{|v_S|} = K\left(\frac{1}{\sqrt{1 + (f_L/f)^2}}\right) \tag{9–17}$$

where

$$K = \frac{r_i}{r_S + r_i}$$

Let us now use v_S as a phase angle reference ($\angle v_S = 0°$) and compute the phase of v_i as a function of frequency. From equation 9–12,

$$\angle v_i = -\arctan\left(\frac{-X_{C_1}}{r_i}\right) + \angle v_S = \arctan\left(\frac{X_{C_1}}{r_i}\right) = \arctan\left(\frac{1}{\omega r_i C_1}\right) \tag{9–18}$$

Again, if source resistance r_S is present, we find

$$\angle v_i = \arctan\left[\frac{1}{\omega(r_i + r_S)C_1}\right] \tag{9–19}$$

Scanned with CamScanner

FIGURE 9–8 (Example 9–5)

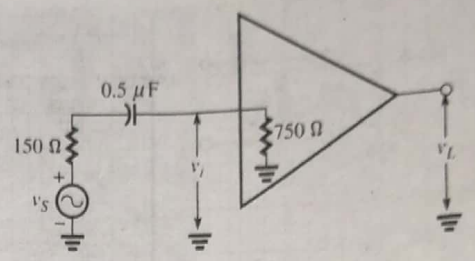

At $\omega = 1/(r_i + r_S)C_1$, equation 9–19 becomes

$$\angle v_i = \arctan(1) = 45°$$

Thus, v_i leads v_S by 45° at cutoff. The phase shift in terms of f_L and the signal frequency f is

$$\angle v_i = \arctan(f_L/f) \tag{9–20}$$

Note that $\angle v_i$ approaches 90° as f approaches 0.

EXAMPLE 9–5

The amplifier shown in Figure 9–8 has midband gain $|v_L|/|v_S|$ equal to 90. Find

1. the voltage gain $|v_L|/|v_i|$,
2. the lower cutoff frequency, and
3. the voltage gain $|v_L|/|v_S|$, in dB, at the cutoff frequency.

Solution

1. At midband, the reactance of the coupling capacitor is negligible, so the overall voltage gain $|v_L|/|v_S|$ is

$$\frac{|v_L|}{|v_S|} = \frac{|v_i|}{|v_S|}\frac{|v_L|}{|v_i|} = \left(\frac{r_i}{r_S + r_i}\right)\frac{|v_L|}{|v_i|}$$

Thus,

$$90 = \left(\frac{750\ \Omega}{150\ \Omega + 750\ \Omega}\right)\frac{|v_L|}{|v_i|}$$

$$\frac{|v_L|}{|v_i|} = 108$$

2. From equation 9–16,

$$f_L = \frac{1}{2\pi(150 + 750)(0.5\ \mu\text{F})} = 354\ \text{Hz}$$

$f_L = \frac{1}{2\pi(r_i+r_s)}$

3. At midband, the gain in dB is $20 \log_{10}(90) = 39.1$ dB. At cutoff, the gain is 3 dB less than its midband value: $39.1 - 3 = 36.1$ dB.

Figure 9–9 shows *normalized* plots of the gain of an RC network connected so that the capacitor is in series with the signal flow and the output is taken across the resistor. This is the configuration at the input of the capacitor-coupled amplifier, as shown in Figure 9–7. The gain of the network approaches 1 (0 dB) at high frequencies, which corresponds to the

Scanned with CamScanner

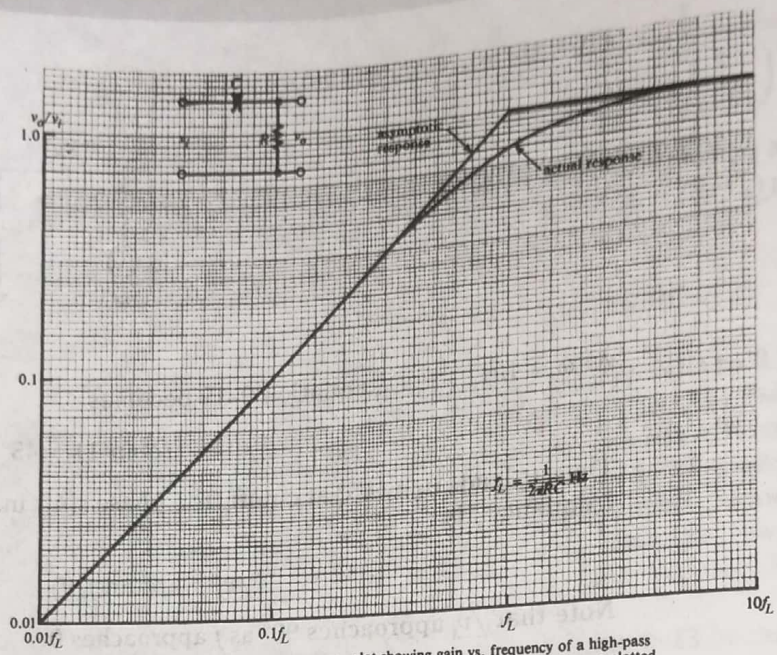

(a) Normalized frequency-response plot showing gain vs. frequency of a high-pass RC network. f_L = lower cutoff frequency. Both gain and frequency are plotted on logarithmic scales.

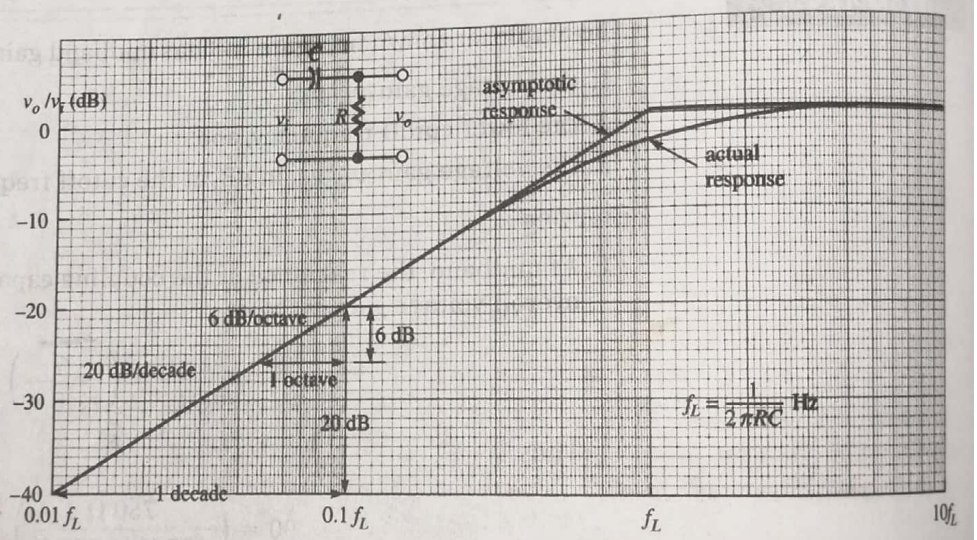

(b) Gain vs. frequency for the high-pass network, plotted on semilog graph paper. Note that the vertical axis is linear and is scaled in dB.

FIGURE 9–9 Normalized gain and phase plots for a high-pass RC network

condition $|v_i|/|v_S| = 1$, when the capacitive reactance is negligibly small. Of course, the *overall* gain of an amplifier having a capacitor-coupled input may be greater than 1 at frequencies above cutoff, but the shape of the frequency response is the same as that shown in Figure 9–9. The only difference is that the gain above cutoff is A_m—the amplifier's midband gain—rather than 1 (0 dB).

Note that the plots in Figure 9–9 extend two decades below and one decade above the cutoff frequency, which is labeled f_L. Figure 9–9(b) shows that the gain is "down" approximately 6 dB at a frequency one octave below cutoff ($0.5f_L$) and is down 20 dB one decade below cutoff (at $0.1f_L$). Figure 9–9(c) shows that the phase shift is 63° one octave below f_L and 86° one decade below f_L. The gain is down 0.04 dB and the phase shift is 6° at a frequency one decade above cutoff ($10f_L$). The gain plots also show the straight line *asymptotes* that the gain approaches at frequencies below cutoff. An

Scanned with CamScanner

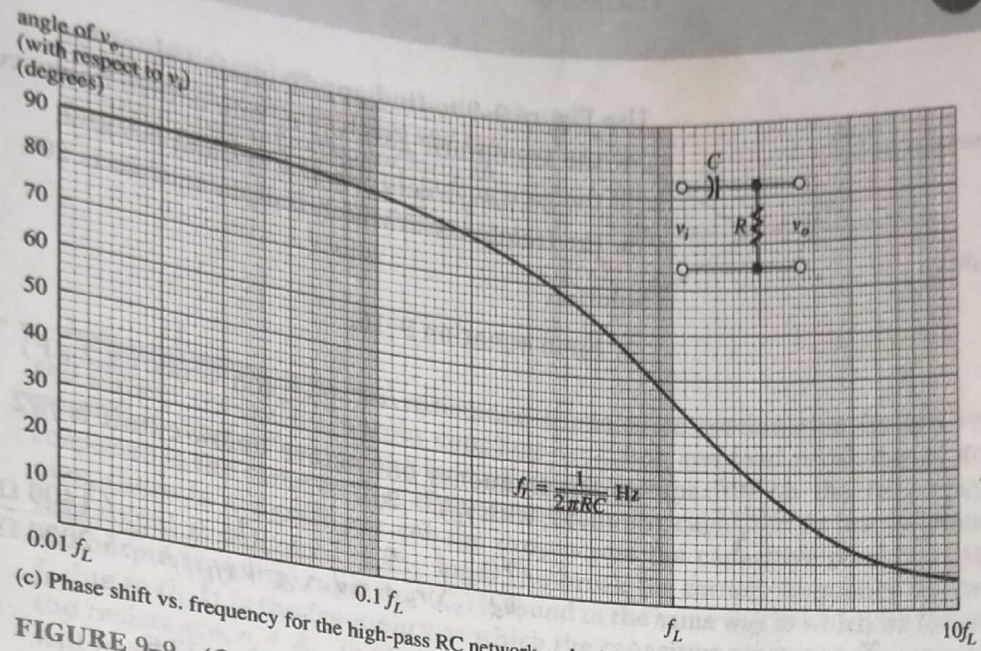

(c) Phase shift vs. frequency for the high-pass RC network. v_o leads v_i.

FIGURE 9–9 (Continued)

6dB/oct

asymptote is often used to approximate the gain response. Note that it "breaks" downward at f_L, where its deviation from the actual response curve is the greatest (3 dB). The frequency at which an asymptote breaks (f_L in this example) is called a *break* frequency. *The asymptote has a slope of 6 dB/octave, or 20 dB/decade.*

When using these plots, remember that they are valid for only a *single* resistor–capacitor (RC) combination. We will study the effects of multiple RC combinations in the signal flow path in a later discussion. The plots in Figure 9–9 apply to any RC network in which the capacitor is in series with the signal path and the output is taken across the resistor. Such a network is called a *high-pass filter*, because, as the plots show, the gain is constant at high frequencies (above cutoff) and "falls off," at a constant rate, below cutoff. To find the overall gain of an RC network in which part of the resistance (r_S) is in the signal source, the gain determined from the plot must be multiplied by the factor $K = r_i/(r_S + r_i)$.

EXAMPLE 9–6

The amplifier shown in Figure 9–10 has voltage gain $|v_L|/|v_i| = 120$. Calculate

1. the lower cutoff frequency due to the input coupling capacitor,
2. the gain $|v_L|/|v_S|$ one octave below cutoff, and
3. the phase shift one decade above cutoff.

FIGURE 9–10 (Example 9–6)

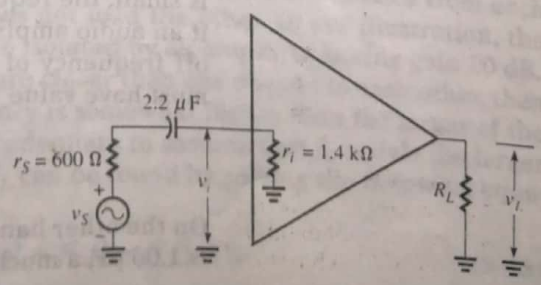

Scanned with CamScanner

Use Figure 9–9 to find approximate values for

4. the asymptotic gain $|v_L|/|v_S|$ one octave below cutoff,
5. the gain $|v_L|/|v_S|$, in dB, at $f = 10.85$ Hz, and
6. the frequency at which the phase shift is 20°.

Solution

1. From equation 9–16,

$$f_L = \frac{1}{2\pi(1400 + 600)(2.2\ \mu\text{F})} = 36.2\ \text{Hz}$$

2. The frequency one octave below cutoff is $f_L/2 = 18.1$ Hz. From equation 9–17, with $f_L/f = 2$,

$$\frac{|v_i|}{|v_S|} = \left(\frac{r_i}{r_S + r_i}\right)\frac{1}{\sqrt{1 + (f_L/f)^2}} = \left(\frac{1400\ \Omega}{2000\ \Omega}\right)\frac{1}{\sqrt{1 + 2^2}} = 0.313$$

Therefore, $\dfrac{|v_L|}{|v_S|} = 0.313\,(120) = 37.6$

3. At one decade above cutoff, $f = 10f_L$, or $f_L/f = 0.1$. Assuming that the amplifier does not cause any phase shift beyond that due to the coupling capacitor, the phase shift is, from equation 9–20, $\arctan(0.1) = 5.71°$.
4. One octave below cutoff, $f = 0.5f_L$. From Figure 9–9(a), the gain at the intersection of the asymptote and the $0.5f_L$ coordinate line is 0.5. Therefore, the overall *asymptotic* gain is

$$\frac{|v_L|}{|v_S|} = 0.5\left(\frac{r_i}{r_S + r_i}\right)120 = 0.5\left(\frac{1400\ \Omega}{2000\ \Omega}\right)120 = 42$$

(Compare with the actual gain of 37.6, computed in part 2.)

5. At $f = 10.85$ Hz, $f/f_L = 10.85/36.2 = 0.3$, so $f = 0.3\ f_L$. From Figure 9–9(b), the gain curve intersects the 0.3 coordinate line at approximately −11 dB. The midband gain $|v_L|/|v_S|$ in decibels is

$$20\log_{10}\left[\left(\frac{1400\ \Omega}{600\ \Omega + 1400\ \Omega}\right)(120)\right] = 38.5\ \text{dB}$$

Therefore, the gain at 10.85 Hz is 38.5 − 11 = 27.5 dB.

6. From Figure 9–9(c), the 20° phase coordinate intersects the curve at approximately 2.8 f_L. Therefore, the phase shift is 20° at (2.8)(36.2 Hz) = 101.4 Hz.

The smaller the desired lower cutoff frequency of an amplifier, the larger the input coupling capacitor must be. If the input resistance of the amplifier is small, the required capacitance may be impractically large. For example, if an audio amplifier having input resistance of 100 Ω is to have a lower cutoff frequency of 15 Hz, then, assuming that $r_S = 0$, the coupling capacitor must have value

$$C_1 = \frac{1}{2\pi(100\ \Omega)(15\ \text{Hz})} = 106\ \mu\text{F}$$

On the other hand, if the input resistance is 10 kΩ, the required capacitance is 1.06 μF, a much more reasonable value.

Scanned with CamScanner

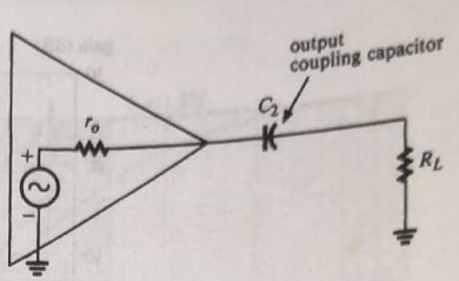

FIGURE 9–11 The output and load resistance of the amplifier and the output coupling capacitor form an RC network that reduces the signal reaching the load at low frequencies

Figure 9–11 shows the resistance–capacitance combination formed by the output resistance, output coupling capacitor, and load resistance of an amplifier. The effect of the output coupling capacitor on the frequency response is the same as that of the input coupling capacitor: At low frequencies, there is a significant voltage drop across the capacitive reactance, so less signal is delivered to the load. The break (or corner) frequency due to the output coupling capacitor (C_2) is found in the same way in which we found f_L due to C_1. It is the frequency at which the capacitive reactance, X_{C_2}, equals the resistance, $r_o + R_L$. To distinguish between the two corner frequencies, we will hereafter write f_1 and f_2:

$$f_1 = \frac{1}{2\pi(r_i + r_s)C_1} \tag{9–21}$$

$$f_2 = \frac{1}{2\pi(r_o + R_L)C_2} \tag{9–22}$$

If the lower cutoff frequency were determined by C_2 alone, then the frequency response in the vicinity of cutoff would have the same appearance as the normalized plots shown in Figure 9–9. However, when both input and output coupling capacitors are present, the low-frequency response is significantly different because both capacitors contribute *simultaneously* to a reduction in gain. Let us first consider the case where the frequencies f_1 and f_2 are considerably different, at least a decade apart. Then, to a good approximation, the overall frequency response will have a lower cutoff frequency, f_L, equal to the *larger* of f_1 and f_2. Figure 9–12 shows the frequency response for the case $f_1 = 10$ Hz and $f_2 = 100$ Hz. The midband gain is assumed to be 20 dB. It is clear that $f_L = 100$ Hz because the gain at that frequency is $20 - 3 = 17$ dB. The gain at 10 Hz is much lower (approximately -3 dB) because at frequencies below 100 Hz *both* C_1 and C_2 cause gain reduction.

Note that in Figure 9–12(a) the gain asymptote has slope 20 dB/decade (6 dB/octave) between 10 Hz and 100 Hz but breaks downward at 10 Hz with a slope of 40 dB/decade (12 dB/octave). There are, therefore, two break frequencies in this example, i.e., two frequencies where the asymptote changes slope: 10 Hz and 100 Hz. The phase shift is approximately 51° at $f_L = 100$ Hz and 129° at 10 Hz and approaches 180° as frequency approaches 0. The response characteristics shown in Figure 9–12 are valid for two high-pass RC networks connected in series, provided the networks are *isolated* from each other, in the sense that one does not load the other. In our illustration, the two networks are assumed to be isolated by an amplifier having gain 20 dB.

If the frequencies f_1 and f_2 are closer than one decade to each other, then the overall lower cutoff frequency is somewhat higher than the larger of the two. In such cases, it is usually adequate to assume that f_L equals the larger of the two. The exact value of f_L can be found by solving the following equation (derived in Appendix C):

$$f_L^4 - (f_1^2 + f_2^2)f_L^2 - f_1^2 f_2^2 = 0 \tag{9–23}$$

Scanned with CamScanner

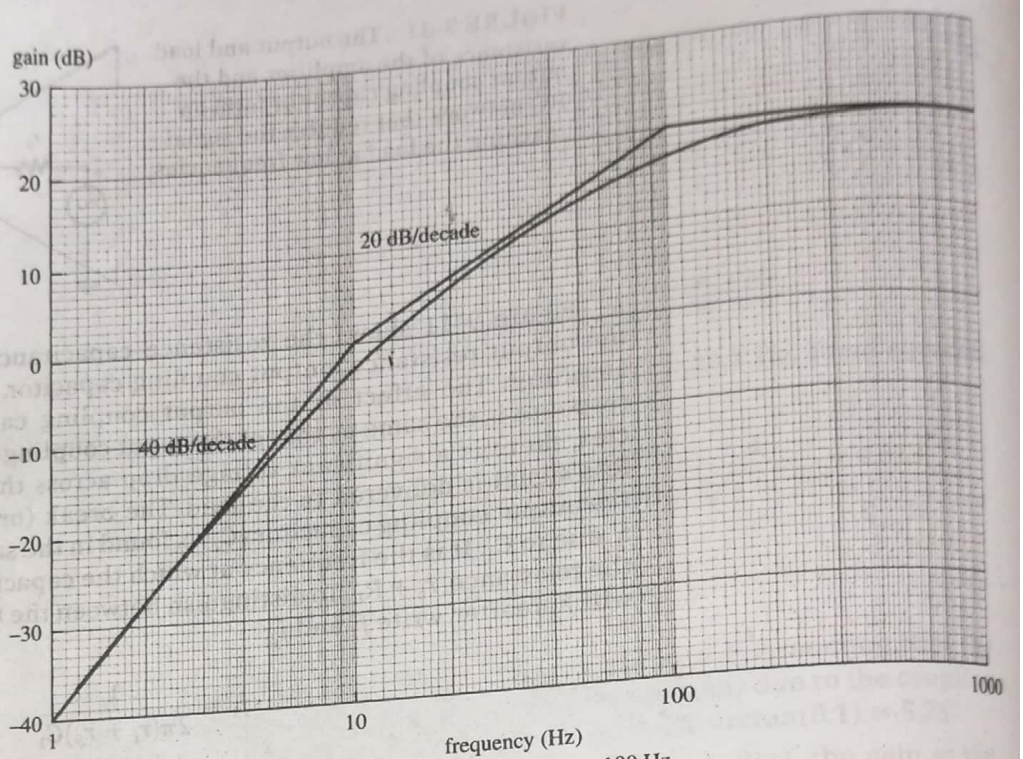

(a) Gain vs. frequency for an amplifier having $f_1 = 10$ Hz and $f_2 = 100$ Hz. The lower cutoff frequency in this case is the larger of the two, $f_L = 100$ Hz. Note that there are two "break" frequencies. $A_m = 20$ dB.

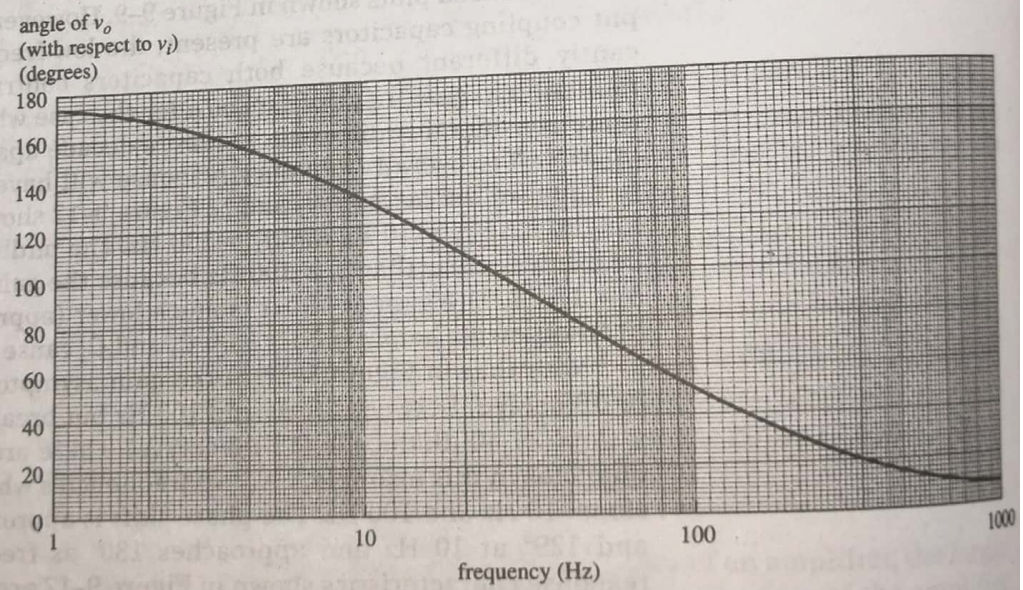

(b) Phase shift vs. frequency for the amplifier whose gain plot is shown in Figure 9-12 (a). Note that the phase angle approaches 180° as frequency approaches 0.

FIGURE 9–12 Gain and phase versus frequency for an amplifier having two break frequencies

Notice that this equation is a quadratic in f_L^2. The solution using the general quadratic formula yields, then, f_L^2.

If $f_1 = f_2$, equation 9–23 can be used to show that the overall lower cutoff frequency is 1.55 times the value of either. For example, if $f_1 = f_2 = 100$ Hz, then $f_L = 155$ Hz. Figure 9–13 shows the normalized gain and phase response

Scanned with CamScanner

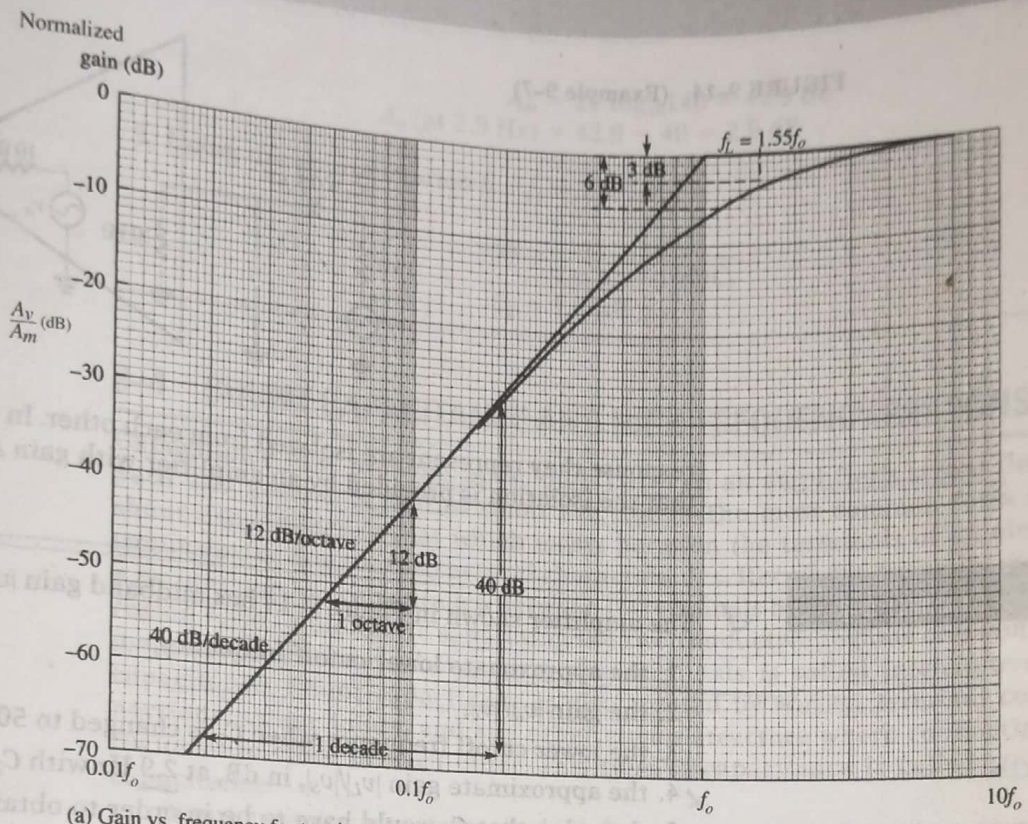

(a) Gain vs. frequency for two isolated, high-pass RC networks having the same cutoff frequency, f_o. Note that $f_L = 1.55f_o$. For this plot, the midband (high-frequency) gain is 0 dB.

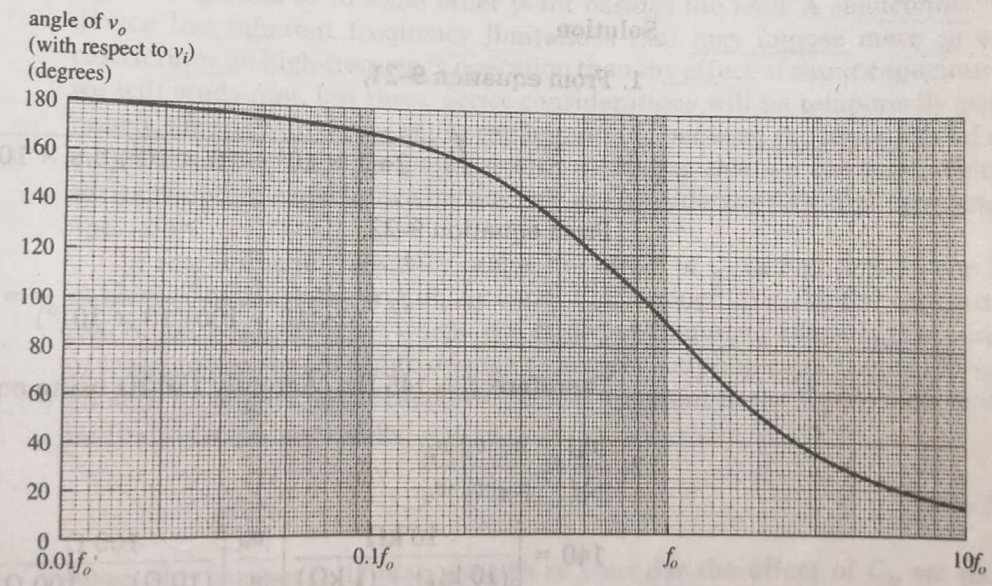

(b) Phase shift vs. frequency for the two high-pass RC networks whose gain is shown in Figure 9-13(a). Note that the output leads the input by 90° at frequency f_o.

FIGURE 9–13 Normalized gain and phase response for the case $f_1 = f_2 = f_0$

for the special case $f_1 = f_2$. Note that the asymptote breaks downward at $f_o = f_1 = f_2$ and has a slope of 40 dB/decade, or 12 dB/octave. The actual response is 6 dB below the asymptote at that frequency. The cutoff frequency is $f_L = 1.55\ f_o$, where the gain is down 3 dB. Note that the break frequency (f_o) is not the same as the cutoff frequency (f_L) in this case. The phase shift is 90° at f_o and approaches 180° as frequency approaches 0. Once again, the plots shown in Figure 9–13 are valid only when the two high-pass RC networks whose

Scanned with CamScanner

FIGURE 9–14 (Example 9–7)

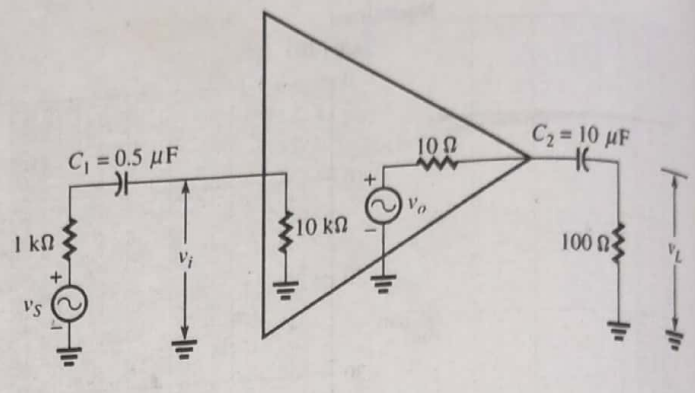

response they represent are isolated from each other. In our case, we assume that the isolation is provided by an amplifier with gain A_m at midband.

EXAMPLE 9–7

The amplifier shown in Figure 9–14 has midband gain $|v_L|/|v_S| = 140$. Find

1. the approximate lower cutoff frequency,
2. the gain $|v_o|/|v_i|$,
3. the lower cutoff frequency when C_2 is changed to 50 μF,
4. the approximate gain $|v_L|/|v_S|$, in dB, at 2.9 Hz with $C_2 = 50$ μF, and
5. the value that C_2 would have to be in order to obtain a lower cutoff frequency of approximately 200 Hz.

Solution

1. From equation 9–21,

$$f_1 = \frac{1}{2\pi(1 \times 10^3 + 10 \times 10^3)(0.5 \times 10^{-6})} = 29 \text{ Hz}$$

From equation 9–22,

$$f_2 = \frac{1}{2\pi(10 + 100)(10 \times 10^{-6})} = 145 \text{ Hz}$$

Therefore, $f_L \approx 145$ Hz. (Actually 150 Hz using equation 9–23.)

2. $$\frac{|v_L|}{|v_S|} = \frac{|v_i|}{|v_S|}\frac{|v_o|}{|v_i|}\frac{|v_L|}{|v_o|}$$

$$140 = \left[\frac{10\text{ k}\Omega}{(10\text{ k}\Omega) + (1\text{ k}\Omega)}\right]\frac{|v_o|}{|v_i|}\left[\frac{100\ \Omega}{(10\ \Omega) + (100\ \Omega)}\right]$$

$$\frac{|v_o|}{|v_i|} = \frac{140}{\left(\frac{1 \times 10^4}{1.1 \times 10^4}\right)\left(\frac{1 \times 10^2}{1.1 \times 10^2}\right)} = 169.4$$

3. $$f_2 = \frac{1}{2\pi(10 + 100)(50\ \mu\text{F})} = 29 \text{ Hz}$$

Therefore, $f_1 = f_2 = 29$ Hz, so $f_L = 1.55(29) = 45$ Hz.

4. 2.9 Hz is one decade below the break frequency of 29 Hz. Because the gain falls at the rate of 40 dB/decade below the break frequency, at 2.9 Hz it will be 40 dB less than A_m:

Scanned with CamScanner

$$A_m = 20 \log_{10} 140 = 42.9 \text{ dB}$$
$$A_v \text{ (at 2.9 Hz)} = 42.9 - 40 = 2.9 \text{ dB}$$

5. Using the approximation $f_L \approx f_1 = 200$ Hz,

$$200 = \frac{1}{2\pi(10 + 100)C_2}$$
$$C_2 = 7.2\ \mu\text{F}$$

9–4 SHUNT CAPACITANCE AND HIGH-FREQUENCY RESPONSE

Capacitance that provides an ac path between an amplifier's signal flow path and ground is said to *shunt* the signal. The most common form of shunt capacitance is that which exists between the terminals of an electronic device due to its structural characteristics. Recall, for example, that a *pn* junction has capacitance between its terminals because the depletion region forms a dielectric separating the two conductive regions of *p* and *n* material. Capacitance between device terminals is called *interelectrode* capacitance. Shunt capacitance is also created by wiring, terminal connections, solder joints, and any other circuit structure where conducting regions are close to each other. This type of capacitance is called *stray* capacitance.

Shunt capacitance affects the high-frequency performance of an amplifier because at high frequencies the small capacitive reactance diverts the signal to ground or to some other point besides the load. A semiconductor device has inherent frequency limitations that may impose more severe restrictions on high-frequency operation than the effect of shunt capacitance we will study now, but these *device* considerations will be temporarily postponed. Figure 9–15 shows shunt capacitance C_A between the input side of an amplifier and ground (in parallel with r_i). Notice that we can now neglect series coupling capacitance because we are considering only high-frequency operation.

In the midband frequency range, the effect of C_A in Figure 9–15 can be neglected because the frequency is not high enough to make the capacitive reactance small. In other words, the midband frequency range is that range of frequencies that are high enough to neglect coupling capacitance and low enough to neglect shunt capacitance. It is apparent in the figure that, in the midband frequency range,

$$\left|\frac{v_i}{v_S}\right| = \frac{r_i}{r_S + r_i} \tag{9–24}$$

When the frequency is high enough to consider the effect of C_A, we must replace r_i in (9–24) by the parallel combination of r_i and $-jX_{C_A}$:

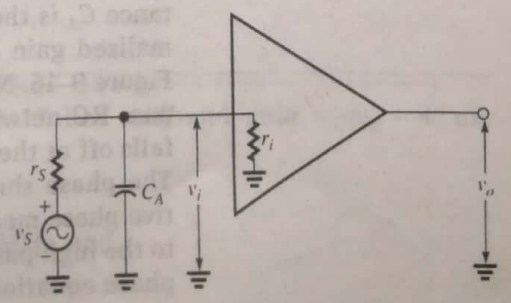

FIGURE 9–15 Shunt capacitance C_A in parallel with the input of an amplifier affects its high-frequency response

Scanned with CamScanner

$$\frac{v_i}{v_S} = \frac{-jX_{C_A} \| r_i}{r_S + (-jX_{C_A} \| r_i)} \tag{9–25}$$

At very high frequencies, where X_{C_A} becomes very small, the parallel combination of X_{C_A} and r_i becomes very small, and the net effect is the same as if the input impedance of the amplifier were made small. As we know, the consequence of that result is that the overall gain is reduced due to the voltage division between r_S and the input impedance. Our goal now is to find the frequency at which that reduction in gain equals 0.707 times the midband value given by equation 9–24. From equation 9–25,

$$\frac{v_i}{v_S} = \frac{r_i/(1 + j\omega r_i C_A)}{r_S + r_i/(1 + j\omega r_i C_A)} = \frac{r_i}{r_S + j\omega r_S r_i C_A + r_i}$$

$$= \frac{r_i}{r_i + r_S} \cdot \frac{1}{1 + j\omega r_S r_i C_A/(r_S + r_i)} = \frac{r_i}{r_S + r_i} \cdot \frac{1}{1 + \dfrac{j\omega}{\omega_A}}$$

and

$$\left|\frac{v_i}{v_S}\right| = \frac{r_i}{r_S + r_i} \cdot \frac{1}{\sqrt{1 + \left(\dfrac{\omega}{\omega_A}\right)^2}}$$

where $\omega_A = 1/(r_i \| r_S)C_A$ rad/sec. Notice that when $\omega = \omega_A$, $|v_i/v_S| = 0.707 r_i/(r_i + r_S)$, meaning that ω_A is the break (or 3-dB) frequency for the input circuit. In terms of the cyclic frequency f in Hz, the expression can be written as

$$\left|\frac{v_S}{v_i}\right| = \frac{r_i}{r_S + r_i} \cdot \frac{1}{\sqrt{1 + \left(\dfrac{f}{f_A}\right)^2}} \tag{9–26}$$

where

$$f_A = \frac{1}{2\pi(r_S \| r_i)C_A} \tag{9-27}$$

Equation 9–27 shows that the break frequency due to C_A is inversely proportional to the parallel combination of r_S and r_i. Thus, to achieve a large bandwidth it is necessary to make $r_S \| r_i$ as small as possible, preferably by making r_S small. Theoretically, if $r_S = 0$, then $r_S \| r_i = 0$, and $f_A = \infty$. In practice, it is not possible to have $r_S = 0$, but a very small value of r_S can increase the upper cutoff frequency significantly (not always a desirable practice, as we shall see in later discussions).

An RC network in which the resistor is in series with the signal flow path and the output is taken across the shunt capacitor is called a *low-pass filter*. The cutoff frequency f_c is determined by $f_c = 1/(2\pi RC)$ Hz. Comparing with equation 9–27, we see that the input of an amplifier having shunt capacitance C_A is the same as a low-pass filter having $R = r_S \| r_i$ and $C = C_A$. Normalized gain and phase plots for the low-pass RC network are shown in Figure 9–16. Note that the gain plot is the mirror image of that of the high-pass RC network shown in Figure 9–9. The asymptote shows that the gain falls off at the rate of 6 dB/octave, or 20 dB/decade, at frequencies above f_c. The phase shift approaches $-90°$ at frequencies above f_c. Note that negative phase means that the output voltage *lags* the input voltage, in contrast to the high-pass RC network, where the output leads the input. The gain and phase equations as functions of the ratio f/f_c are

Scanned with CamScanner

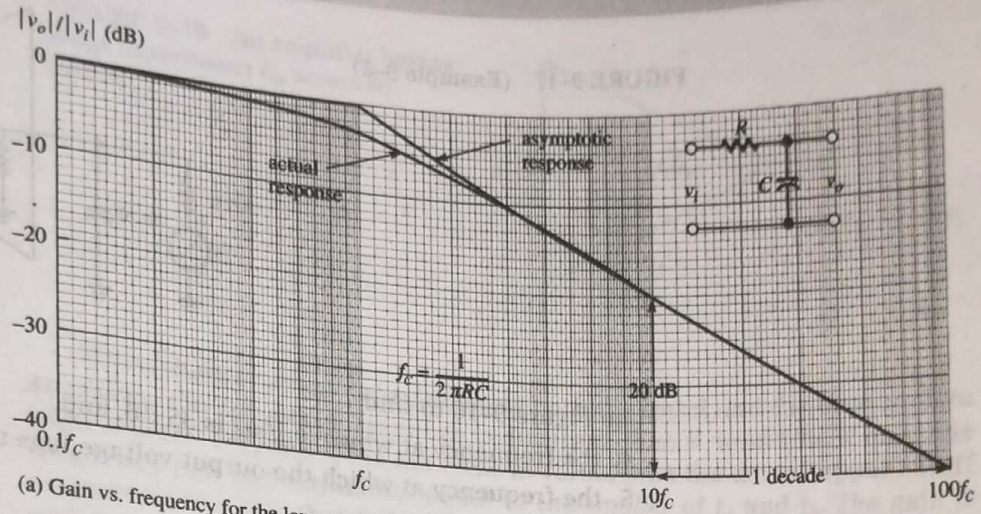

(a) Gain vs. frequency for the low-pass RC network. f_c = upper cutoff frequency.

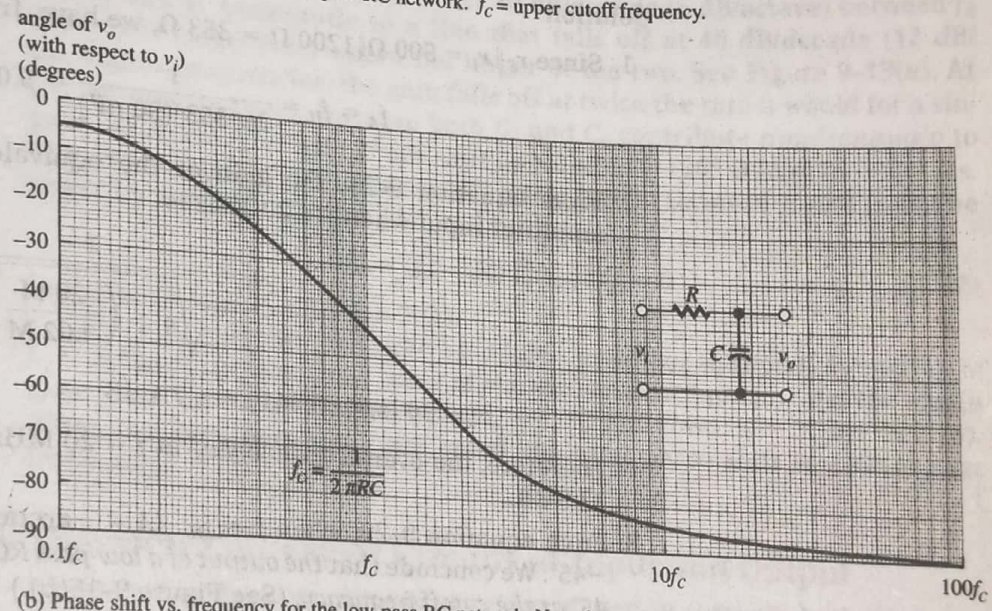

(b) Phase shift vs. frequency for the low-pass RC network. Note that v_o lags v_i.

FIGURE 9–16 Gain and phase versus frequency for a low-pass RC network

$$|A| = \frac{1}{\sqrt{1 + (f/f_c)^2}} = \left|\frac{v_o}{v_i}\right| \tag{9–28}$$

and

$$\angle A = -\arctan(f/f_c) \tag{9–29}$$

where $f_c = 1/(2\pi RC)$, $R = r_S \| r_i$, and $C = C_A$, for an amplifier having input shunt capacitance C_A.

EXAMPLE 9–8

The amplifier shown in Figure 9–17 has midband gain $|v_L/v_S| = 40$ dB. Calculate

1. the upper cutoff frequency f_H,
2. the gain $|v_L/v_S|$, in dB, at $f = 20$ MHz, and
3. the phase shift at $f = f_H$

Scanned with CamScanner

FIGURE 9–17 (Example 9–8)

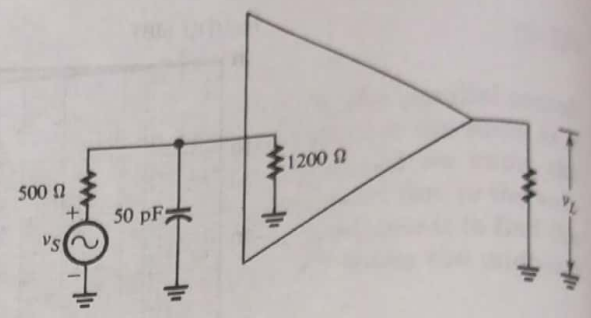

Use Figure 9–16 to find

4. the frequency at which $|v_L|/|v_S|$ is 35 dB, and
5. the frequency at which the output voltage lags the input voltage by 30°.

Solution

1. Since $r_S \| r_i = 500\ \Omega \| 1200\ \Omega = 353\ \Omega$, we have, from equation 9–27,

$$f_A = f_H = \frac{1}{2\pi(353)(50\text{ pF})} = 9.02\text{ MHz}$$

2. From equation 9–28, the gain of the equivalent RC network at the amplifier input when $f = 20$ MHz is

$$|A| = \frac{1}{\sqrt{1 + \left(\frac{20\text{ M}}{9.02\text{ M}}\right)^2}} = 0.441$$

$$20 \log_{10}(0.441) = -7.1\text{ dB}$$

Therefore, the overall gain $|v_L|/|v_S|$ at $f = 20$ MHz is (40 dB) − (7.1 dB) = 32.9 dB.

3. From equation 9–29, when $f = f_H$, $\angle A = -\arctan(f_H/f_H) = -\arctan(1) = -45°$. We conclude that *the output of a low-pass RC network lags the input by 45° at the cutoff frequency.* (See Figure 9–16(b).)
4. An overall gain of 35 dB corresponds to a 5-dB drop in gain from the mid-band value of 40 dB. From Figure 9–16(a), the gain of the equivalent RC network at the amplifier input is down 5 dB at approximately $f = 1.5f_c = 1.5(9.02\text{ MHz}) = 13.5$ MHz.
5. From Figure 9–16(b), the frequency at which the phase shift is −30° is approximately $f = 0.57f_c = 0.57(9.02\text{ MHz}) = 5.14$ MHz.

Figure 9–18 shows shunt capacitance C_B connected across the output of an amplifier. The output resistance r_o of the amplifier, the load resistance R_L, and the capacitance C_B form a low-pass RC network that has the same effect on the high-frequency response as the low-pass network at the input: The gain falls off because the impedance to ground decreases with increasing frequency. The upper corner frequency due to C_B is derived in the same way as that due to C_A.

$$f_A = \frac{1}{2\pi(r_S \| r_i)C_A} \tag{9–30}$$

$$f_B = \frac{1}{2\pi(r_o \| R_L)C_B} \tag{9–31}$$

Scanned with CamScanner

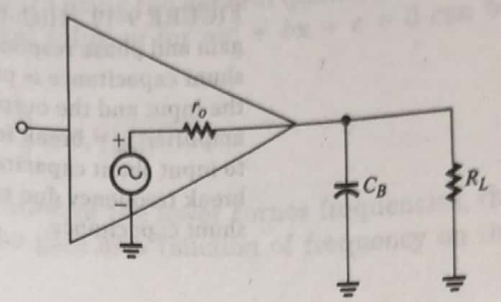

FIGURE 9–18 An amplifier having shunt capacitance C_B across its output

When there is shunt capacitance at both the input and the output of an amplifier, the frequency response is different than it would be if only one were present. If f_A and f_B are not close in value, then the actual upper cutoff frequency f_H is approximately equal to the *smaller* of f_A and f_B. The gain is asymptotic to a line that falls off at 20 dB/decade (6 dB/octave) between f_A and f_B and is asymptotic to a line that falls off at 40 dB/decade (12 dB/octave) at frequencies above the larger of the two. See Figure 9–19(a). At the higher frequencies, the gain falls off at twice the rate it would for a single low-pass network, because both C_A and C_B contribute *simultaneously* to gain reduction. The total phase shift approaches −180° at high frequencies. The exact value of the upper cutoff frequency in terms of f_A and f_B can be found by solving (Appendix C)

$$f_H^4 + (f_A^2 + f_B^2) f_H^2 - f_A^2 f_B^2 = 0 \tag{9–32}$$

in the same way as equation 9–23.

If $f_A = f_B$, equation 9–32 can be used to show that the cutoff frequency is $f_H = 0.645\, f_A$. In that case, there is but one break frequency, and the single asymptote has slope −40 dB/decade, or −12 dB/octave. See Figure 9–19(b). When the two frequencies are equal, the total phase shift is −90° at that frequency.

Thévenin Equivalent Circuits at Input and Output

We note that the same *form* of equation is used to compute both the lower and upper corner frequencies of an amplifier: $f = 1/2\pi RC$. In the case of f_L, C is either input or output coupling capacitance, and in the case of f_H, C is input or output shunt capacitance. In *both* cases, R is the Thévenin equivalent resistance seen by the capacitance. This observation provides an easy way to remember the equations for calculating corner frequencies:

$$f = \frac{1}{2\pi r_{TH} C} \tag{9–33}$$

where r_{TH} is the Thévenin equivalent resistance with respect to the capacitor terminals at input or output. Recall that the Thévenin equivalent resistance is found by open-circuiting the capacitor terminals and computing the total equivalent resistance looking into those terminals when all voltage sources are replaced by short circuits. As an exercise, verify that the equations for f_1, f_2, f_A, and f_B can also be found using the Thévenin equivalent resistance with respect to the capacitor terminals.

The Overall Picture

When we look at the overall frequency response of a capacitively coupled amplifier, we see two main segments: the low-frequency behavior due to the coupling capacitors C_1 and C_2, and the high-frequency behavior due to the

Scanned with CamScanner

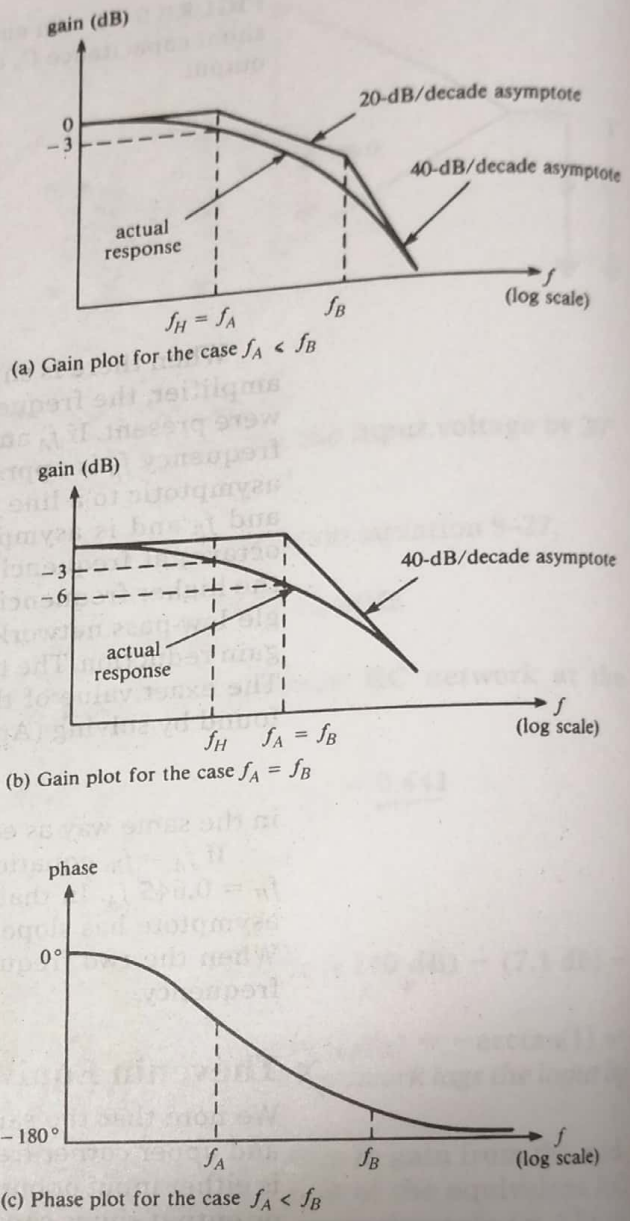

FIGURE 9–19 High-frequency gain and phase response when shunt capacitance is present at both the input and the output of an amplifier. f_A = break frequency due to input shunt capacitance, f_B = break frequency due to output shunt capacitance.

shunt capacitances C_A and C_B. Each of these capacitances produces a corner frequency, thus resulting in two corner frequencies on the lower side (f_1 and f_2) and two on the upper side (f_A and f_B).

On the lower side, if the corner (or break) frequencies f_1 and f_2 are separated by close to a decade or more, then the lower cutoff frequency f_L will be approximately equal to the larger of the two. But what do we mean by "close to a decade"? It is certainly not a factor of 3 or 4, but we can say that a factor of 7 or 8 is fairly close to a decade. The more separated f_1 and f_2 are, the closer the cutoff frequency will be to the larger of the two. For example if $f_1 = 4$ Hz and $f_2 = 50$ Hz, then f_L is 50 Hz without a doubt, because they are separated by (slightly) more than a decade. In that case, we say that the larger corner frequency is the "dominant" corner frequency because it influences the cutoff frequency, f_L, the most.

When f_1 and f_2 are identical (coincident corner frequencies), the cutoff frequency f_L is 1.55 times either frequency. However, if the corner frequencies are different but not sufficiently separated, the cutoff frequency will be "pushed up" somewhat above the larger of the two. In this case,

Scanned with CamScanner

we obtain f_L by solving equation 9–23 using the general quadratic formula. Note that when $a = 1$, the general solution for $ax^2 + bx + c = 0$ can be simplified to

$$x = -\frac{b}{2} \pm \sqrt{(b/2)^2 - c}$$

Regardless of the relative location of the lower corner frequencies, the equation for the magnitude of the gain as a function of frequency on the lower side is

$$|A_{vs}| = \frac{A_m}{\sqrt{1 + \left(\frac{f_1}{f}\right)^2}\sqrt{1 + \left(\frac{f_2}{f}\right)^2}} \tag{9–34}$$

where A_m is the magnitude of the overall gain in the midband. Remember that the response on the lower side is of high-pass nature.

The phase response on the lower side, which approaches $+180°$ as f approaches zero and goes to $0°$ in the midband, is given by

$$\phi_L(f) = \arctan(f_1/f) + \arctan(f_2/f) \tag{9–35}$$

On the upper side of the frequency response, the two upper corner frequencies are f_A (due to C_A) and f_B (due to C_B). The upper cutoff frequency (or 3-dB frequency) depends on their relative values (location on the f-axis). If they are sufficiently separated, the "dominant" corner frequency will be the smaller of the two and its value will approximate the upper cutoff frequency, f_H. When they coincide, the cutoff frequency f_H is 0.645 times either frequency. If they are not sufficiently separated, however, the cutoff frequency is "pushed down" from the smaller of the two corner frequencies, requiring the use of equation 9–32 to solve for f_H.

The equation for the magnitude of the gain as a function of frequency on the upper side, which is of low-pass character, is

$$|A_{vs}| = \frac{A_m}{\sqrt{1 + \left(\frac{f}{f_A}\right)^2}\sqrt{1 + \left(\frac{f}{f_B}\right)^2}} \tag{9–36}$$

and the overall phase response on the upper side is

$$\phi_H(f) = -\arctan(f/f_A) - \arctan(f/f_B) \tag{9–37}$$

Note that the phase on the upper side approaches zero when f is much smaller than the smaller of the two upper corner frequencies, that is, well into the midband. For f values much larger than the larger of the two, the phase approaches $-180°$. Figure 9–20 shows the overall response for gain magnitude and phase (Bode plot) of an amplifier having distinct corner frequencies on both ends. Note that the midband, shown broken in the figure, is typically three to four decades wide for an audio amplifier. On the other hand, video amplifiers have a much wider bandwidth, from about 15 Hz to more than 5 MHz.

Miller-Effect Capacitance

Figure 9–21 shows an amplifier having capacitance C_C connected between its input and output terminals. The most common example of such capacitance is interelectrode capacitance, as, for example, between the base and the collector of a common-emitter amplifier or between the gate and the drain of

Scanned with CamScanner

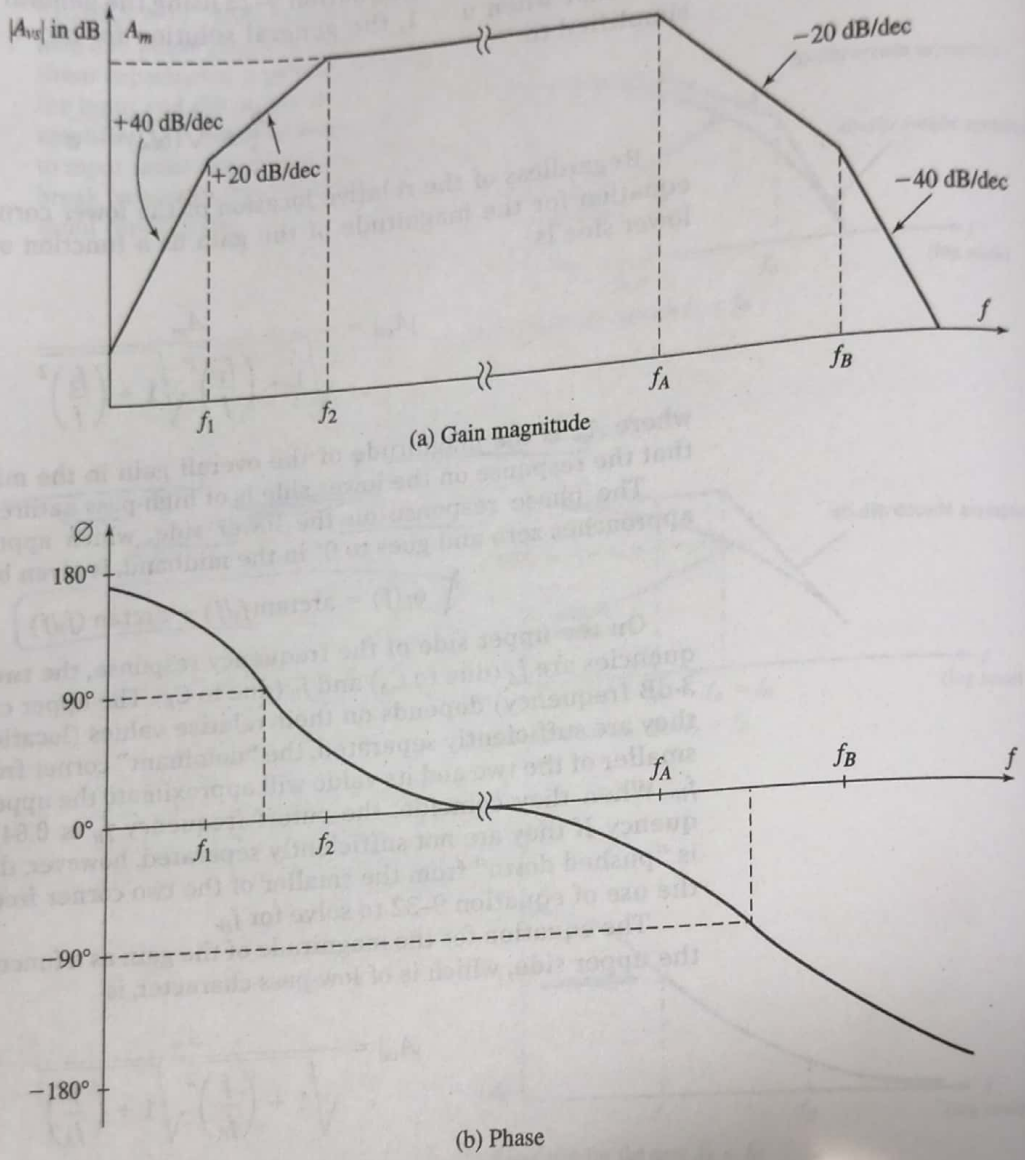

FIGURE 9–20 Overall frequency response of an amplifier with distinct corner frequencies

a common-source amplifier. This capacitance forms a *feedback* path for ac signals, and it can have a significant influence on the high-frequency response of an amplifier.

The conclusion in the derivation that follows is based on the method used in circuit analysis to determine the total admittance (y) of components connected in parallel, which we will review briefly now. Recall that admittance is the sum of conductance g and susceptance b: $y = g + jb$ siemens. Also recall that the total admittance of parallel-connected components is the *sum* of their individual admittances. The susceptance of capacitance C is $b = j\omega C$ S. In particular, the total admittance of resistance R in parallel with capacitance C at ω rad/s is

$$y = g + jb = 1/R + j\omega C$$

Thus, for example, if the *input admittance* to a circuit were $0.01 + j0.02$ S at frequency $\omega = 1000$ rad/s, we would conclude that the input circuit consisted

Scanned with CamScanner

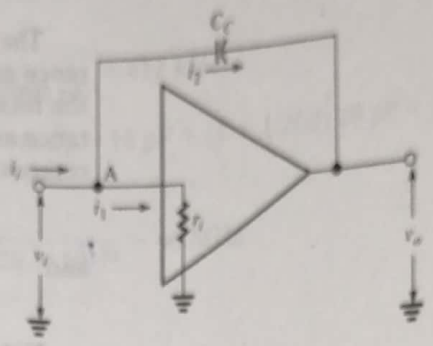

FIGURE 9–21 Capacitance C_C connected between the input and the output of an amplifier affects its high-frequency response due to the Miller effect

of resistance $R = 1/g = 1/0.01 = 100\ \Omega$ in parallel with capacitance $C = b/\omega = 0.02/1000 = 20\ \mu F$.

Writing Kirchhoff's current law at the node labeled A in Figure 9–21, we have

$$i_i = i_1 + i_2$$

The current i_2 that flows in the capacitor is the difference in voltage across it divided by the capacitor's impedance:

$$i_2 = \frac{v_i - v_o}{-jX_{C_C}}$$

Therefore,

$$i_i = \frac{v_i}{r_i} + \frac{v_i - v_o}{-jX_{C_C}} \tag{9–38}$$

Let the amplifier gain be $A_v = v_o/v_i$. Substituting $v_o = A_v v_i$ in (9–38) gives

$$i_i = \frac{v_i}{r_i} + \frac{v_i - A_v v_i}{-jX_{C_C}} = v_i\left(\frac{1}{r_i} + \frac{1 - A_v}{-jX_{C_C}}\right)$$

Then

$$i_i = v_i\left[\frac{1}{r_i} + j\omega C_C(1 - A_v)\right] \tag{9–39}$$

Equation 9–39 shows that the input admittance consists of the conductance component $1/r_i$ and the capacitive susceptance component $\omega C_C(1 - A_v)$. Note that *this input admittance is exactly the same as it would be if a capacitance having value $C_C(1 - A_v)$ were connected between input and ground* instead of capacitance C_C connected between input and output. In other words, as far as the input signal is concerned, capacitance connected between input and output has the same effect as that capacitance "magnified" by the factor $(1 - A_v)$ and connected so that it shunts the input. This magnification of feedback capacitance, reflected to the input, is called the *Miller effect*, and the magnified value $C_C(1 - A_v)$ is called the *Miller capacitance*, C_M. Miller capacitance is releyant only for an *inverting* amplifier, so A_v is a negative number and the magnification factor $(1 - A_v)$ equals one *plus* the magnitude of A_v.

By a derivation similar to the foregoing, it can be shown that capacitance in the feedback path is also reflected to the output side of an amplifier. In this case, the effective shunt capacitance at the output is $(1 - 1/A_v)C_C$. Once again, A_v is negative, so the magnitude of the reflected capacitance is $(1 + 1/|A_v|)C_C$. Because the increase in capacitance is inversely proportional to gain, the effect is much less significant than that of the capacitance reflected to the input.

Scanned with CamScanner

The total shunt capacitance at the input is the sum of the Miller capacitance and any other input-to-ground capacitance that may be present. Also, the total shunt capacitance at the output is the sum of the reflected capacitance and any other output-to-ground capacitance present. Let us define the composite capacitances C'_A and C'_B as follows:

$$C'_A = C_A + (1 - A_v)C_C \tag{9–40}$$

and

$$C'_B = C_B + (1 - 1/A_v)C_C \tag{9–41}$$

Note that C'_A and C'_B are the total equivalent capacitances across the input and output, respectively, after reflecting the capacitance C_C. Therefore, the corresponding frequencies f'_A and f'_B are:

$$f'_A = \frac{1}{2\pi(r_S \| r_i)C'_A} \tag{9–42}$$

and

$$f'_B = \frac{1}{2\pi(r_o \| R_L)C'_B} \tag{9–43}$$

An important concept to understand at this point is that the frequencies f'_A and f'_B that result from the Miller effect when C_C is present will not be the actual upper corner frequencies of the amplifier. Furthermore, in this case a third corner that causes a positive slope change to the gain will occur at a very high frequency; however, its location is so far apart that it has practically no effect on the cutoff frequency. It can be shown that the lowest or dominant corner frequency, that is, the upper cutoff frequency f_H, can be closely approximated by

$$f_H \approx \frac{1}{\dfrac{1}{f'_A} + \dfrac{1}{f'_B}} \tag{9–44}$$

EXAMPLE 9–9

The inverting amplifier shown in Figure 9–22 has a gain $v_L/v_i = -200$. Find its upper cutoff frequency.

Solution

We will use the gain v_L/v_i to determine the Miller capacitance. Notice that this is the gain *between the points where the 20-pF capacitance is connected.* The Miller capacitance is, therefore, $C_M \approx (20\text{ pF})\,[1 - (-200)] = 4020$ pF. The total capacitance C'_A shunting the input is then $C'_A = (40\text{ pF}) + (4020\text{ pF}) = 4060$ pF. The frequency f'_A is

FIGURE 9–22 (Example 9–9)

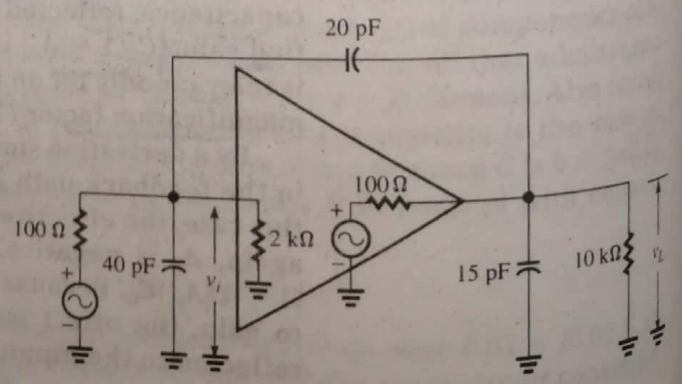

Scanned with CamScanner

$$f'_A = \frac{1}{2\pi[(2\text{ k})\parallel 100]4060\text{ pF}} = 412\text{ kHz}$$

The total capacitance shunting the output is $C'_B = 15\text{ pF} + (1 + 1/200)\,20\text{ pF} \approx 35\text{ pF}$. The frequency f'_B is

$$f'_B = \frac{1}{2\pi[(10\text{ k})\parallel 100]35 \times 10^{-12}} = 46\text{ MHz}$$

The 3-dB frequency f_H is then

$$f_H \approx \frac{1}{\dfrac{1}{f'_A} + \dfrac{1}{f'_B}} \approx 408\text{ kHz}$$

9–5 TRANSIENT RESPONSE:-

The *transient response* of an electronic amplifier or system is the output waveform that results when the input is a pulse or a sudden change in level. Because the transient response is a waveform, it is presented as a plot of voltage versus time, in contrast to frequency response, which is plotted versus frequency. Figure 9–23 shows a typical transient response.

The transient response of an amplifier is completely dependent on its frequency response, and vice versa. In other words, if two amplifiers have identical frequency responses, they will have identical transient responses, and vice versa. A pulse can be regarded as consisting of an infinite number of frequency components, so the transient waveform represents the amplifier's ability (or inability) to amplify all frequency components equally and to phase-shift all components equally. Theoretically, if an amplifier had infinite bandwidth, its transient response would be an exact duplicate of the input pulse. It is not possible for an amplifier to have infinite bandwidth, so the transient response is always a distorted version of the input pulse. It is necessary for an amplifier to have a wide bandwidth (to be a *wideband*, or *broadband*, amplifier) in order for it to amplify pulse or square-wave signals with a minimum of distortion. *Square-wave testing* is sometimes used to check the frequency response of an amplifier, as shown in Figure 9–24. The figure shows typical waveforms that result when a square wave is applied to an amplifier whose frequency response causes attenuation of either low- or high-frequency components. "Low" or "high" frequency in any given case means low or high in relation to the square-wave frequency, f_S.

As a concrete example of how frequency response is related to transient response, consider the low-pass RC network shown in Figure 9–25. The figure shows the output transient when the input is an abrupt change in level (called a *step* input), such as might occur when a dc voltage is switched into the network. Recall that the time constant, $\tau = RC$ seconds, is the time required for the transient output to reach 63.2% of its final value. Also recall that the cutoff frequency of the network is $f_c = 1/(2\pi RC)$ Hz. Thus, $f_c = 1/(2\pi\tau)$ Hz. Since

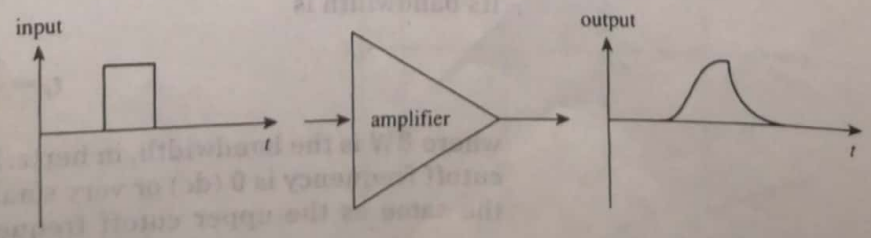

FIGURE 9–23 The output waveform is the transient response of the amplifier to a pulse-type input

Scanned with CamScanner

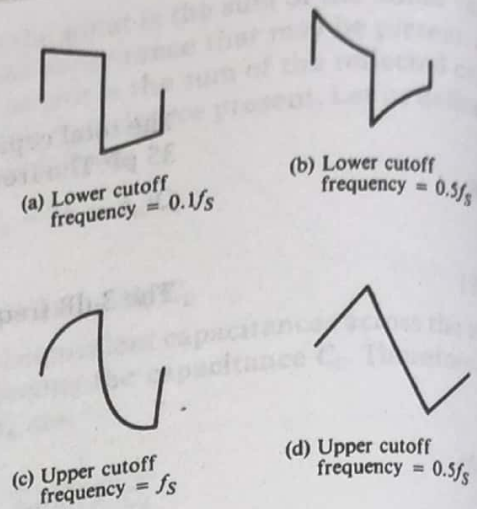

FIGURE 9–24 Typical outputs resulting from square-wave testing of an amplifier. f_S = square-wave frequency. In (a) and (b), only low frequencies are attenuated, and in (c) and (d), only high frequencies are attenuated. In both cases, the attenuation outside cutoff is 20 dB/decade

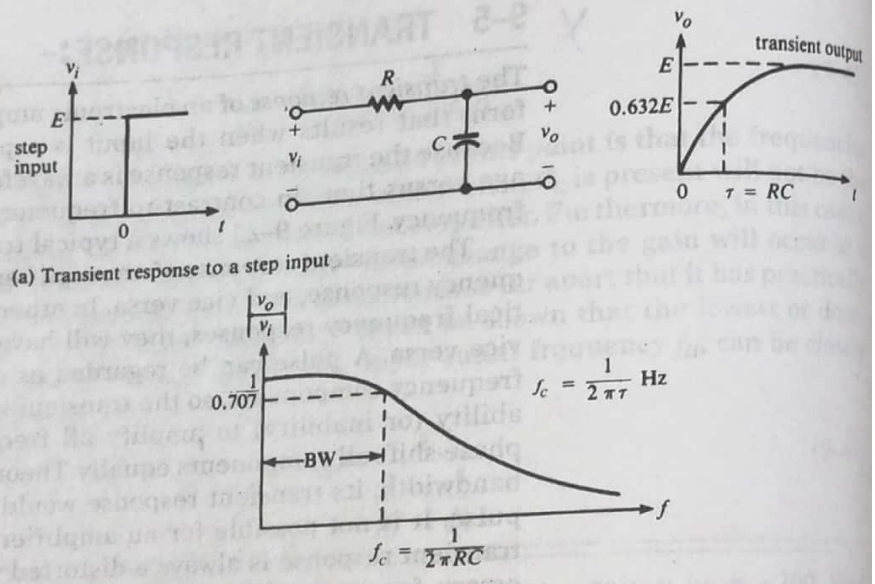

FIGURE 9–25 Relationship between transient response and frequency response. Note that the bandwidth is inversely proportional to the time constant of the transient

the network passes all frequencies below f_c, down to dc, its bandwidth equals $f_c - 0 = f_c$. Summarizing,

$$\text{BW} = f_c = \frac{1}{2\pi\tau}$$

This equation shows that the cutoff frequency and the bandwidth, which are frequency-response characteristics, are *inversely* proportional to the time constant, which is a characteristic of the transient response. It is generally true for all electronic devices that the time required for the transient response to rise to a certain level is inversely proportional to bandwidth.

Recall that rise time, t_r, is the time required for a waveform to change from 10% of its final value to 90% of its final value. A widely used approximation that relates the rise time of the transient response of an amplifier to its bandwidth is

$$t_r \approx \frac{0.35}{\text{BW}} \tag{9–45}$$

where BW is the bandwidth, in hertz. Equation 9–45 is used when the lower cutoff frequency is 0 (dc) or very small so that the bandwidth is essentially the same as the upper cutoff frequency. The relationship is exact if the

Scanned with CamScanner

high-frequency response beyond cutoff is the same as that of the single RC low-pass network (Figure 9–25).

EXAMPLE 9–10

The specifications for a certain oscilloscope state that the rise time of the vertical amplifier is 8.75 ns. What is the approximate bandwidth of the amplifier?

Solution

From equation 9–45,

$$\text{BW} \approx \frac{0.35}{t_r} = \frac{0.35}{8.75 \times 10^{-9}} = 40 \text{ MHz}$$

A practical application of equation 9–45 is in the measurement of the bandwidth of an amplifier. A square waveform is applied to the input, and the output voltage is observed on the oscilloscope. The rise time is then measured with the oscilloscope and bandwidth calculated with equation 9–45. An interesting aspect to note is that the rise time does not depend on the frequency of the applied square waveform, only on the bandwidth of the circuit.

Transient response due to low-frequency characteristics of the amplifier is manifested as "sagging" of the output waveform as shown in Figure 9–26. The amount of sagging depends of course on the frequency of the square waveform (larger period, larger ΔV) as well as on the lower cutoff frequency of the amplifier, f_L. If the amplifier can pass dc (zero frequency), the output waveform will not sag. If we define the sag as the ratio of sagging voltage to peak voltage, that is,

$$\text{sag} = \frac{\Delta V}{E_P} \tag{9–46}$$

we can derive an expression for the sag in terms of the square-wave frequency f and the lower cutoff frequency f_L. Using an analogy with a discharging RC circuit, the expression can be shown to be

$$\text{sag} = 1 - e^{-\pi f_L/f} \tag{9–47}$$

This transient characteristic can be used for quickly obtaining the lower cutoff frequency of an amplifier by driving it with a square wave and measuring E_P and ΔV with the oscilloscope to obtain the sag. For example, if the sag of an amplifier when driven by a square wave is 0.18, then substituting into (9–47) yields

$$0.82 = e^{-\pi f_L/300}$$

from which we obtain $f_L = 19$ Hz.

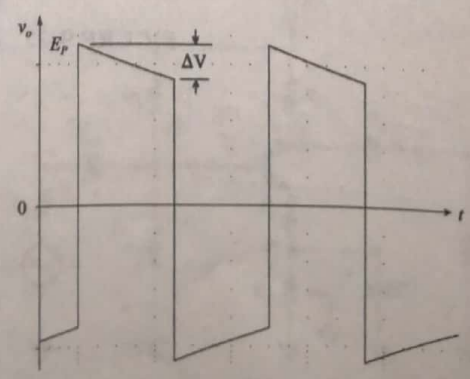

FIGURE 9–26 Transient response due to low-frequency response of an amplifier

Scanned with CamScanner

9–6 FREQUENCY RESPONSE OF BJT AMPLIFIERS

Low-Frequency Response of BJT Amplifiers

We have learned that the lower cutoff frequency of an amplifier is approximately equal to the larger of f_1 and f_2, where

$$f_1 = \frac{1}{2\pi(r_S + r_i)C_1} \tag{9–48}$$

$r_o = R_C \| r_o$

and

$$f_2 = \frac{1}{2\pi(r_o + R_L)C_2} \tag{9–49}$$

In a BJT amplifier, the term r_i appearing in equation 9–48 is r_{in}, the resistance seen by the source when looking into the amplifier. Its value depends on the transistor configuration, the bias resistors, and the values of the transistor parameters. Similarly, r_o in equation 9–49 is r_{out}, and its value depends on particular amplifier characteristics. The next example illustrates the application of equations 9–48 and 9–49 to determine the lower cutoff frequency of a fixed-bias common-emitter amplifier.

EXAMPLE 9–11

Find the lower cutoff frequency of the amplifier shown in Figure 9–27. Assume that the resistance looking into the base of the transistor is 1500 Ω and that the transistor output resistance at the collector, r_o, is 100 kΩ.

Solution

$r_i \| R_B$

Since $r_{in} = (150\ \text{k}\Omega) \| (1.5\ \text{k}\Omega) \approx 1.5\ \text{k}\Omega$, we have, from equation 9–46,

$$f_1 = \frac{1}{2\pi(50 + 1500)(1\ \mu\text{F})} \approx 103\ \text{Hz}$$

$r_{out} = R_C \| R_E$

$r_{in} = R_B \| r_i$

$R_C \| R_L$

Since $r_{out} = (100\ \text{k}\Omega) \| (1\ \text{k}\Omega) \approx 1\ \text{k}\Omega$, we have, from equation 9–49,

r_o 1

R_L

r_{out} $R_C \| r_o$

$$f_2 = \frac{1}{2\pi(1\ \text{k} + 3\ \text{k})(1\ \mu\text{F})} \approx 40\ \text{Hz}$$

Because f_1 and f_2 are not sufficiently separated, we use equation 9–23 to solve for f_L. Substituting the values for f_1 and f_2:

$$f_L^4 - (103^2 + 40^2)\, f_L^2 - 103^2\, 40^2 = 0 \quad \text{or} \quad f_L^4 - 12209\, f_L^2 - 17 \times 10^6 = 0$$

Using the simplified quadratic formula, we solve for the positive solution for f_L^2 as follows:

FIGURE 9–27 (Example 9–11)

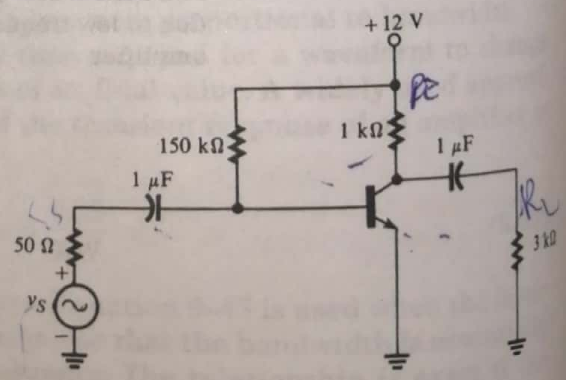

Scanned with CamScanner

$$f_L^2 = 6104 + (6104^2 + 17 \times 10^6)^{1/2} = 13.47 \times 10^3$$

from which $f_L = 116$ Hz follows.

Figure 9–28 shows a common-emitter amplifier having an emitter bypass capacitor C_E designed to bring the emitter closer to ac ground, as discussed in Chapter 7. At low frequencies, the reactance of C_E can become significant, to the extent that the voltage gain is reduced. Thus, we can define another corner frequency due to C_E that affects the amplifier's low-frequency response in the same way as the coupling capacitors, C_1 and C_2. If the coupling capacitors are large enough to have negligible effect, then the gain will fall 3 dB below its midband value at the frequency where the reactance of C_E equals the resistance R_e looking into node A in Figure 9–28:

$$R_e = R_E \left\| \left(\frac{r_S \| R_B}{\beta} + r_e' + R_f \right) \right. \tag{9–50}$$

where $R_B = R_1 \| R_2$. Then,

$$f_L = \frac{1}{2\pi R_e C_E} \quad (C_1, C_2 \text{ large}) \tag{9–51}$$

Making C_1 and C_2 very large can be impractical. In general, C_1 and C_E produce two interdependent corner frequencies in addition to the corner frequency produced by C_2. Furthermore, it can also be shown that the parallel combination of R_E and C_E produces one more corner frequency given by

$$f_Z = \frac{1}{2\pi R_E C_E} \tag{9–52}$$

which causes an asymptotic break in a direction opposite to the other three corner frequencies. Figure 9–29 shows a typical asymptotic plot of the frequency response caused by C_1, C_2, and C_E. Note the break point at f_Z producing an increase in slope, opposite to the other three break points. In a practical design, C_2 can be chosen so that f_2 coincides with f_Z, thus mutually canceling their effect, because their asymptotic breaks are of opposite nature.

Although it is possible to obtain the exact value of the two corner frequencies caused by C_1 and C_E acting together and from there obtain the lower cutoff frequency f_L, the required analysis would be very extensive and elaborate. Instead, it can be shown that an acceptable approximation for the lower cutoff frequency is the sum of the short-circuit *natural* frequencies of C_1 and C_E using the general form $1/2\pi RC$, where R is the equivalent resistance across each capacitor C with the other capacitor

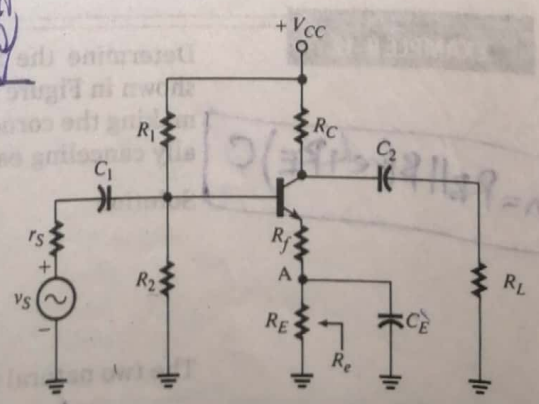

FIGURE 9–28 The corner frequency due to the bypass capacitor is the frequency where the reactance of C_E equals the resistance R_e

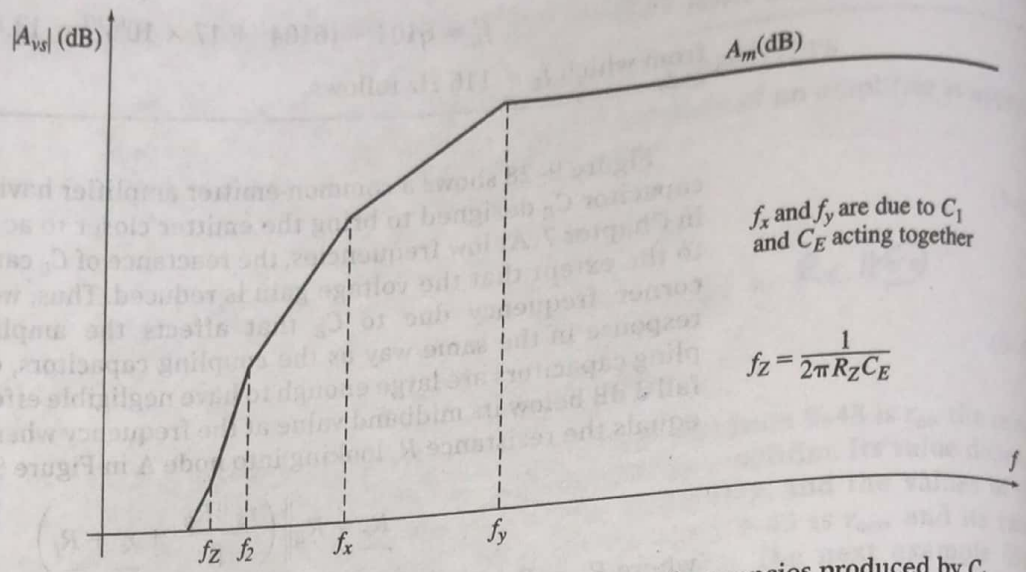

FIGURE 9–29 Asymptotic plot of $|A_{vs}|$ showing the corner frequencies produced by C_1 and C_E

shorted. A *natural frequency* in an RC circuit is associated with a particular time constant.

Let f_b be the natural frequency from C_1 and f_e the natural frequency from C_E. Then,

$$f_b = \frac{1}{2\pi[r_S + R_B \| \beta(r'_e + R_f)]C_1} \tag{9–53}$$

and

$$f_e = \frac{1}{2\pi R_e C_E} \tag{9–54}$$

Notice that the term $R_B \| \beta(r'_e + R_f)$ in equation 9–53 is the amplifier's stage input resistance, r_{in}.

The approximate lower cutoff frequency is then

$$f_L \approx f_b + f_e \tag{9–55}$$

This approximation is valid if the corner frequencies f_Z and f_2 cancel each other or if at least their values are smaller than both f_b and f_e. The condition $f_2 = f_Z$ can be satisfied by simply making $C_2(r_{out} + R_L) = C_E R_Z$.

An example illustrating these concepts follows.

EXAMPLE 9–12

Determine the approximate lower cutoff frequency for the CE amplifier shown in Figure 9–30. Assume $\beta = 150$ and $r'_e = 13\ \Omega$. Note that $C_2 = 7.5\ \mu F$, making the corner frequency f_2 coincide with the corner frequency f_Z, mutually canceling each other.

$r_{in} = R_B \| \beta(r_e' + R_E)$ C

$\beta \|$

Solution

$$R_B = 40\text{ k} \| 10\text{ k} = 8\text{ k}\ \Omega$$
$$r_{in} = 8\text{ k} \| [150(82 + 13)] = 6.12\text{ k}\ \Omega$$
$$R_e = 680 \| [82 + 13 + (8\text{ k} \| 1\text{ k})/150] = 88\ \Omega$$

The two natural frequencies are then

Scanned with CamScanner

FIGURE 9–30 (Example 9–12)

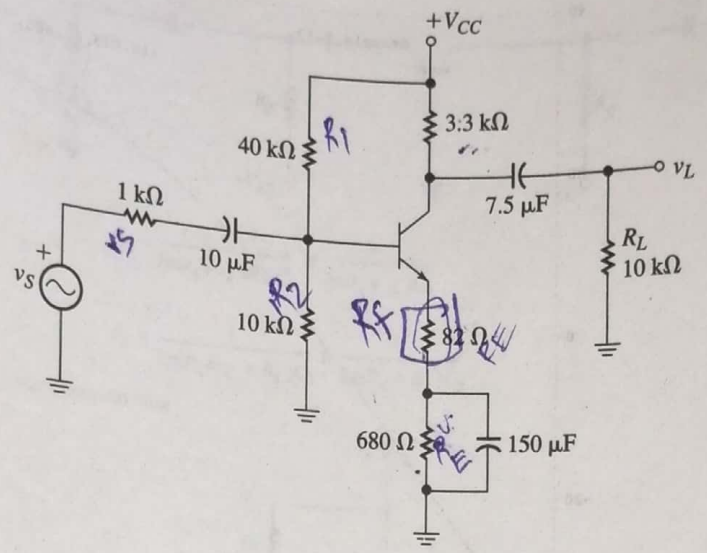

$$f_b = 1/[2\pi(6.12\text{ k})10\ \mu] = 2.6\text{ Hz}$$
$$f_e = 1/[2\pi(88)150\ \mu] = 12\text{ Hz}$$

Therefore, the cutoff frequency is

$$f_L \approx 2.6 + 12 \approx 14.6\text{ Hz}$$

EXAMPLE 9–13

Use SPICE to simulate the circuit from Example 9–12 to obtain the plot of the frequency response over the frequency range from 1 Hz through 1 kHz. Use the transistor 2N3904 with V_{CC} = 12 volts.

SPICE

Solution

Shown here is the circuit's file using PSpice. Note that the .AC statement specifies 50 frequency points per decade in order to get a smooth plot. The plot of the gain in Figure 9–31 was obtained in dB using the Probe interactive program. Note that an input voltage of 1 V may seem too large. Recall that SPICE does not consider practical voltage limitations and clipping when performing an AC analysis. Also note at the bottom of the plot the expression entered to obtain the gain in dB: db (v(7)/v(1)).

Rb||Pre'

$\frac{1}{2\pi R_s + R_b/\beta r_e}$

```
CE Amplifier with Emitter Feedback
*Nodes: Input=1, CBE=4, 3, 5, Vcc=8, Output=7
vs 1 0 ac 1
rs 1 2 1k
r1 8 3 40k
r2 3 0 10k
rc 8 4 3.3k
q1 4 3 5 q2n3904
rf 5 6 82
rz 6 0 680
rl 7 0 10k
cb 2 3 10uf
ce 6 0 150uf
cc 4 7 7.5uf
vcc 8 0 12
.lib eval.lib
```

Scanned with CamScanner

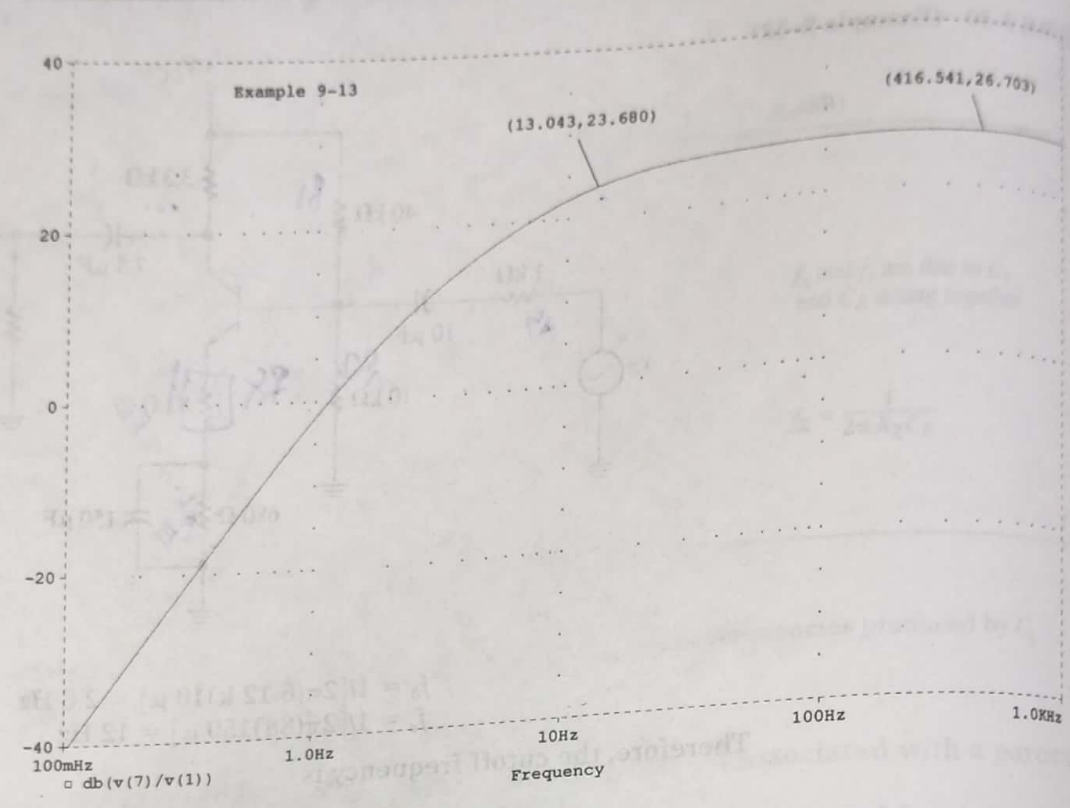

FIGURE 9–31 (Example 9–13)

```
.op
.ac dec 50 1 1k
.probe
.end
```

The Probe plot shows a value-labeled point in the midband and another at the cutoff frequency. The value of about 13 Hz from the plot agrees well with the calculated value of 14.6 Hz.

The principal consideration in the design and analysis of amplifiers in the low-frequency region is the (Thévenin equivalent) resistance across each capacitor used in the circuit. We have seen that a break frequency occurs whenever the frequency becomes low enough to make the capacitive reactance equal to the equivalent resistance at the point of connection. Therefore, in any BJT amplifier, the capacitor that is most critical in determining the lower cutoff frequency is the one that "sees" the smallest resistance. In the case of the common-emitter amplifier, C_E is that capacitor. In a common-base amplifier, the stage input resistance ($r_{in} \approx r_e'$) is quite small, so the input coupling capacitor, C_1, is the most crucial. In the common-collector amplifier, the output resistance is quite small, so the output coupling capacitor, C_2, is crucial. Of course, a large source resistance in the case of a CB amplifier, or a large load resistance in the case of a CC amplifier, will mitigate these circumstances, since each is in series with the affected capacitor.

In the particular case of the CE amplifier with emitter resistor R_f, in which the lower cutoff frequency is $f_L \approx f_b + f_e$, a practical design criterion is to make f_e 90% of f_L, f_b 10% of f_L, and $f_2 = f_Z$. If we assigned 90% of the cutoff frequency to f_b and 10% to f_e, the result would be the same but the value of C_E would be much larger, making it less cost-effective. It can be, however, a good SPICE simulation problem for verification.

Scanned with CamScanner

FIGURE 9–32 CB and CC amplifiers and the equations for f_1 and f_2 for each

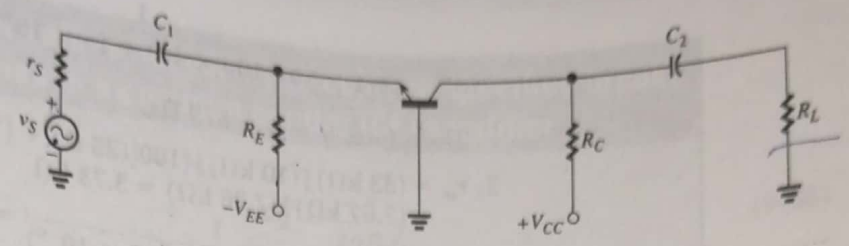

$$f_1 = \frac{1}{2\pi(r_s + r_e' \| R_E)C_1} \cong \frac{1}{2\pi(r_s + r_e')C_1}$$

$$f_2 = \frac{1}{2\pi(R_C \| r_C + R_L)C_2} \cong \frac{1}{2\pi(R_C + R_L)C_2}$$

(a) Common base

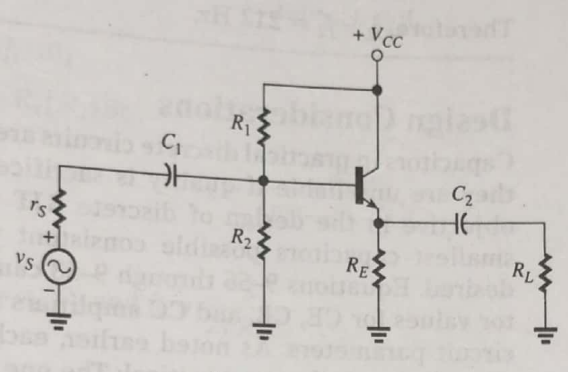

$$f_1 = \frac{1}{2\pi\,(r_s + r_{in})\,C_1} \quad \text{where } r_{in} = R_1 \| R_2 \| \beta(r_e' + R_E \| R_L)$$

$$f_2 = \frac{1}{2\pi(R_e + R_L)\,C_2} \quad \text{where } R_e = R_E \| \left(\frac{r_S \| R_1 \| R_2}{\beta} + r_e'\right)$$

(b) Common collector (emitter follower)

$r_{in} = R_1 \| R_2 \| \beta$
$(r_e' + R_E \| R_L)$

Figure 9–32 shows common-base and common-collector amplifiers and gives the equations for the break frequencies due to each coupling capacitor. These are derived in a straightforward manner by solving for the frequency at which the capacitive reactance of each capacitor equals the Thévenin equivalent resistance across it.

EXAMPLE 9–14

A certain transistor has $\beta = 100$, $r_C = 100\ \text{k}\Omega$, and $r_e' = 25\ \Omega$. The transistor is used in each of the circuits shown in Figure 9–32. Find the approximate lower cutoff frequency in each circuit, given the following component values:

1. (Common-base circuit)

$r_S = 100\ \Omega$ $\quad R_C = 1\ \text{k}\Omega$ $\quad C_1 = 2.2\ \mu\text{F}$
$R_E = 10\ \text{k}\Omega$ $\quad R_L = 15\ \text{k}\Omega$ $\quad C_2 = 1\ \mu\text{F}$

2. (Common-collector circuit)

$r_S = 100\ \Omega$ $\quad R_E = 1\ \text{k}\Omega$ $\quad C_1 = 2\ \mu\text{F}$
$R_1 = 33\ \text{k}\Omega$ $\quad R_L = 50\ \Omega$ $\quad C_2 = 10\ \mu\text{F}$
$R_2 = 10\ \text{k}\Omega$

Solution

1. $f_1 = \dfrac{1}{2\pi(100 + 25 \| 10 \times 10^3)(2.2 \times 10^{-6})} = 579\ \text{Hz}$

Scanned with CamScanner

$$f_2 = \frac{1}{2\pi(1 \times 10^3 \| 100 \times 10^3 + 15 \times 10^3)(1 \times 10^{-6})} = 9.9 \text{ Hz}$$

Therefore, $f_L = f_1 = 579$ Hz.

2. $r_{in} = (33 \text{ k}\Omega) \| (10 \text{ k}\Omega) \| (100[(25\ \Omega) + (1 \text{ k}\Omega) \| (50 \text{ k}\Omega)]$
$= (7.67 \text{ k}\Omega) \| (7.26 \text{ k}\Omega) = 3.73 \text{ k}\Omega$

$$f_1 = \frac{1}{2\pi(100 + 3.73 \times 10^3)(2 \times 10^{-6})} = 20.8 \text{ Hz}$$

$$R_e = (1 \text{ k}\Omega) \left\| \left[\frac{(100\ \Omega) \| (33 \text{ k}\Omega) \| (10 \text{ k}\Omega)}{100} + (25\ \Omega) \right] \approx 25\ \Omega \right.$$

$$f_2 = \frac{1}{2\pi(25 + 50)(10 \times 10^{-6})} = 212 \text{ Hz}$$

Therefore, $f_L \approx f_2 = 212$ Hz.

Design Considerations

Capacitors in practical discrete circuits are generally bulky and costly, or else they are unreliable if quality is sacrificed for cost. Therefore, a principal objective in the design of discrete BJT amplifiers is the selection of the smallest capacitors possible consistent with the low-frequency response desired. Equations 9–56 through 9–58 can be used to find minimum capacitor values for CE, CB, and CC amplifiers in terms of break frequencies and circuit parameters. As noted earlier, each configuration has one capacitor whose value is the most critical: The one connected to the point where the equivalent resistance is smallest. This capacitor should be selected first to ensure that the lower cutoff frequency is at least as low as the break frequency it produces. The other capacitor(s) can then be selected to break frequencies a decade or so below cutoff. (With two identical break frequencies occurring one decade below the third, the gain is actually reduced by a factor of 0.7, rather than 0.707, at the third frequency.)

EXAMPLE 9–15

DESIGN

A CE amplifier having $R_1 = 330$ kΩ, $R_2 = 47$ kΩ, $R_C = 3.3$ kΩ, and $R_E = 1.8$ kΩ is to have a lower cutoff frequency of 50 Hz. The amplifier drives a 10-kΩ load and is driven from a signal source whose resistance is 600 Ω. The transistor has $\beta = 90$ and $r_o = 100$ kΩ and is biased at $I_E = 0.5$ mA. Find coupling and bypass capacitors necessary to meet the low-frequency response requirement. Assume that capacitors must be selected from a line having standard values of 1 μF, 1.5 μF, 3.3 μF, 4.7 μF, 6.8 μF, 10 μF, 47 μF, 68 μF, and 100 μF.

Solution

To obtain a value for C_E, we must first find the value of r_e':

$$r_e' \approx \frac{0.026}{I_E} = \frac{0.026}{0.5 \text{ mA}} = 52\ \Omega$$

Then, from equations 9–56,

$$R_e = 1.8 \text{ k}\Omega \left\| \left[\frac{(600\ \Omega) \| (330 \text{ k}\Omega) \| (47 \text{ k}\Omega)}{90} + 52\ \Omega \right] = 56.7\ \Omega \right.$$

and

$$C_E = \frac{1}{2\pi(56.7\ \Omega)(50 \text{ Hz})} = 56.1\ \mu\text{F}$$

Scanned with CamScanner

Capacitor values necessary to achieve specified break frequencies in a common emitter (CE) amplifier

$$C_E^* = \frac{1}{2\pi R_e f_L} \tag{9–56}$$

where $R_e = R_E \left\| \left(\frac{r_S \| R_1 \| R_2}{\beta} + r_e' \right) \right.$.

$$C_1 = \frac{1}{2\pi[r_{in} + r_S]f_1}$$

(make $f_1 = f_L/10$)

where $r_{in} = R_1 \| R_2 \| \beta r_e'$.

$$C_2 = \frac{1}{2\pi[r_{out} + R_L]f_z}$$

where $r_{out} = r_o \| R_C$ and $f_Z = \frac{1}{2\pi R_E C_E}$

*Select first.

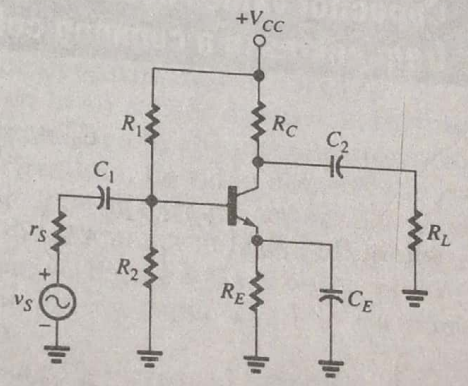

To ensure that the lower cutoff frequency is no greater than 50 Hz, we choose the standard-value capacitor with the next *higher* capacitance. Thus, we choose $C_E = 68\ \mu F$.

To find C_1 and C_2, we let $f_1 = 50\ Hz/10 = 5\ Hz$ and use equations 9–56 to calculate

$$r_{in} = 330\ k\Omega \| 47\ k\Omega \| (90)(52\ \Omega) = 4.2\ k\Omega$$

$$C_1 = \frac{1}{2\pi(4.2\ k\Omega + 600\ \Omega)5\ Hz} = 6.63\ \mu F$$

$$r_{out} = 100\ k\Omega \| 3.3\ k\Omega = 3.19\ k\Omega, \quad f_2 = f_Z = \frac{1}{2\pi(1.8\ k)68\ \mu F} = 1.3\ Hz$$

$$C_2 = \frac{1}{2\pi(3.19\ k\Omega + 10\ k\Omega)1.3\ Hz} = 9.3\ \mu F$$

Scanned with CamScanner

Capacitor values necessary to achieve specified break frequencies in a common base (CB) amplifier

$$C_1^* = \frac{1}{2\pi(r_S + r_e' \| R_E) f_L}$$

$$C_2 = \frac{1}{2\pi(R_C \| r_C + R_L) f_2}$$

(make $f_2 = f_L/10$)

*Select first.

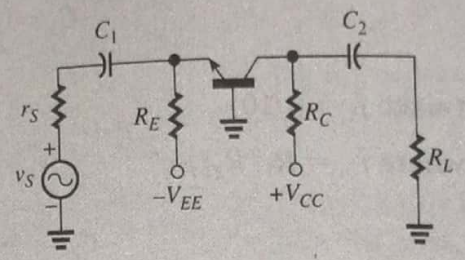

Capacitor values necessary to achieve specified break frequencies in a common collector (CC) amplifier

$$C_2^* = \frac{1}{2\pi(R_e + R_L) f_L}$$

where $R_e = R_E \| \left(\frac{r_s \| R_1 \| R_2}{\beta} + r_e' \right)$.

$$C_1 = \frac{1}{2\pi[r_{in} + r_S] f_1}$$

where $r_{in} = R_1 \| R_2 \| \beta(r_e' + R_E \| R_L)$.

(make $f_1 = f_L/10$)

*Select first.

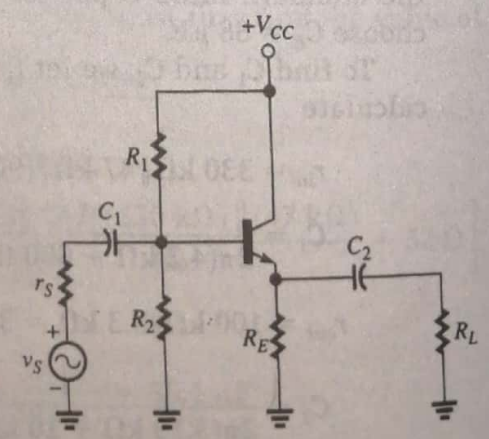

Scanned with CamScanner

Again choosing standard capacitors with the next highest values, we select $C_1 = 6.8\ \mu F$ and $C_2 = 10\ \mu F$.

It is a SPICE programming exercise at the end of this chapter to find the actual reduction in gain at 50 Hz when these standard-value capacitors are used. Our choices result in an actual lower cutoff frequency of about 52 Hz.

High-Frequency Response of BJT Amplifiers

Figure 9–33 shows a common-emitter amplifier having interelectrode capacitance designated C_{be}, C_{bc}, and C_{ce}. Because we are now considering high-frequency performance, the emitter bypass capacitor effectively shorts the emitter terminal to ground, so C_{be} and C_{ce} are input-to-ground and output-to-ground capacitances, respectively. We can apply the general equations developed earlier to determine the corner frequency due to the interelectrode capacitances:

$$f_A = \frac{1}{2\pi(r_S \| r_i)C_A} \tag{9–59}$$

where $C_A = C_{be} + C_M = C_{be} + C_{bc}(1 - A_v)$ and $r_{in} = R_1 \| R_2 \| (\beta r'_e)$. Note that the Miller-effect capacitance, C_M, is due to C_{bc} because the latter is connected between the input (base) and output (collector) of the common-emitter configuration. The corner frequency due to the output shunt capacitance is

$$f_B = \frac{1}{2\pi(r_{out} \| R_L)C_B} \tag{9–60}$$

where $C_B = C_{ce} + C_{bc}(1 - 1/A_v)$ and $r_{out} = r_o \| R_C$. Any wiring or stray capacitance that shunts the input or output must be added to C_A or C_B. It is important to note that f_B is typically much larger than f_A. Therefore, the upper cutoff frequency will be approximately equal to f_A.

As mentioned in an earlier discussion, the high-frequency performance of a transistor is affected by the interelectrode capacitances that cause β to be frequency dependent. Its value drops at the rate of 20 dB/decade at frequencies beyond a certain frequency called the *beta cutoff frequency*, f_β. By definition, f_β is the frequency at which the β of a transistor is 0.707 times its low-frequency value. Figure 9–34 shows a plot of β versus frequency as it would appear on log-log paper. The low- (or mid-) frequency value of β is designated β_m.

If the frequency is increased beyond f_β, β continues to decrease until it eventually reaches a value of 1. As shown in Figure 9–34, the frequency at which $\beta = 1$ is designated f_T. Note that the asymptote's slope of −20 dB/decade is the same as a slope of −1 on log-log scales, since 20 dB is a 10-to-1 change along the vertical axis and a decade is a 10-to-1 change

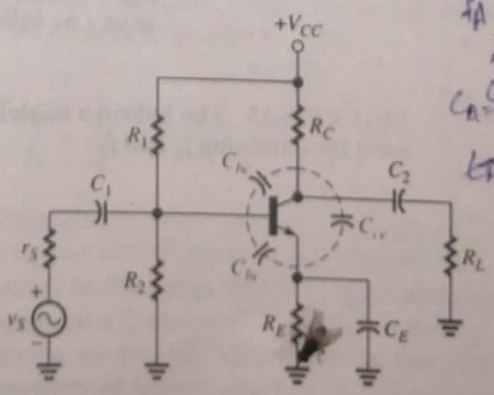

FIGURE 9–33 A common-emitter amplifier showing the interelectrode capacitances of the transistor

$f_A = \frac{1}{2\pi(r_S \| r_i)C_A}$

$C_A = C_{be} + C_{bc}$

$C_M = C_{be} + C_{bc}(1-$

Scanned with CamScanner

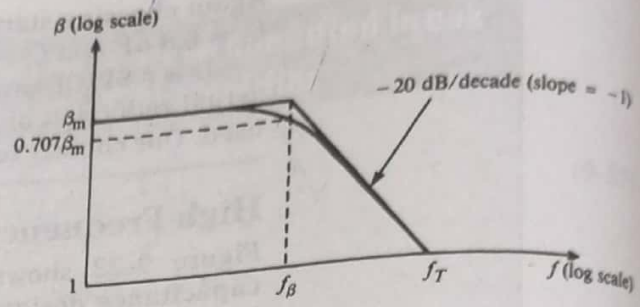

FIGURE 9–34 The β of a transistor becomes smaller at high frequencies. At frequencies above f_β, its value falls off at the rate of 20 dB/decade, and reaches value 1 at the frequency designated f_T

along the horizontal axis. Therefore, in Figure 9–34, the difference between the logarithms of β_m and 1 must be the same as the difference between the logarithms of f_T and f_β:

$$\log \beta_m - \log(1) = \log f_T - \log f_\beta$$

$$\log(\beta_m/1) = \log(f_T/f_\beta)$$

Taking the antilog of both sides leads to the important result

$$f_\beta = \frac{f_T}{\beta_m} \tag{9–61}$$

The frequency dependency of β is due to the base–emitter junction capacitance C_{be} and to the base–collector capacitance C_{bc}. To demonstrate this fact, consider the CE configuration modeled with the hybrid-π model shown in Figure 9–35. Notice that the output is shorted to satisfy the definition for β or h_{fe}. Note also that because of the short circuit, the capacitor C_μ is connected in parallel with C_π. The short-circuit collector current can clearly be written as $i_c = g_m v_\pi$. But $v_\pi = i_b Z_i$, where Z_i is the parallel combination of r_π, C_π, and C_μ, which can be shown to be

$$Z_i = \frac{r_\pi}{1 + j\omega r_\pi(C_\pi + C_\mu)} \tag{9–62}$$

Therefore, from $i_c = g_m i_b Z_i$ and substituting Z_i, we can solve for the ratio i_c/i_b, which yields

$$\frac{i_c}{i_b} = \beta = \frac{g_m r_\pi}{1 + j\omega r_\pi(C_\pi + C_\mu)} \tag{9–63}$$

This expression, as expected, is a low-pass function whose magnitude approaches $g_m r_\pi$ when ω approaches zero. Also, observe that the value of ω that makes the denominator of equation 9–63 equal to 1 + j1 is the 3-dB frequency ω_β, since $g_m r_\pi/|1 + j1| = 0.707\, g_m r_\pi$ at that point. Therefore, by letting $\beta_m = g_m r_\pi$, we can write an expression for the magnitude of β as a function of ω or f as follows:

FIGURE 9–35 The hybrid-π model used for obtaining f_β and f_T

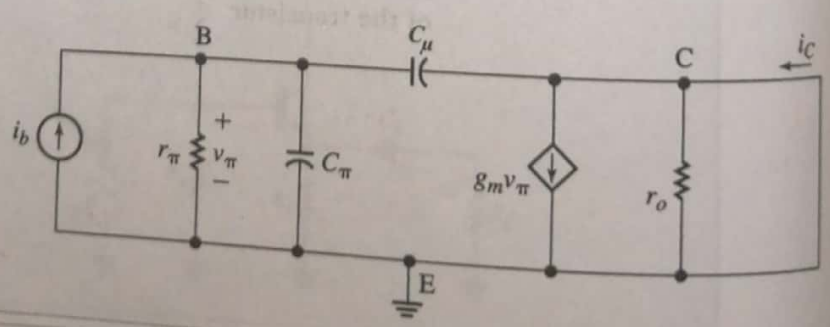

Scanned with CamScanner

$$|\beta| = \frac{\beta_m}{\sqrt{1 + \left(\frac{\omega}{\omega_\beta}\right)^2}} = \frac{\beta_m}{\sqrt{1 + \left(\frac{f}{f_\beta}\right)^2}} \tag{9–64}$$

where

$$\omega_\beta = \frac{1}{r_\pi(C_\pi + C_\mu)} \quad \text{and} \quad f_\beta = \frac{1}{2\pi r_\pi(C_\pi + C_\mu)} \tag{9–65}$$

To obtain an expression for ω_T (or f_T) directly from equation 9–63, we note that for large ω values, the *magnitude* of β reduces to

$$|\beta| = \frac{g_m}{\omega(C_\pi + C_\mu)}$$

We now simply make $|\beta| = 1$ and solve for ω to obtain

$$\omega_T = \frac{g_m}{C_\pi + C_\mu} = \frac{1}{r'_e(C_\pi + C_\mu)} \tag{9–66}$$

or

$$f_T = \frac{1}{2\pi r'_e(C_\pi + C_\mu)} \tag{9–67}$$

Although the information given by manufacturers in data sheets regarding f_T is important, we have to understand that, by definition, β (or h_{fe}) is a short-circuit current gain, which is equivalent to the ratio of ac collector current to ac base current with $R_L = 0$. When the transistor operates normally in a circuit with a load resistance R_L, the frequency response of the current gain will have a 3-dB frequency significantly lower than f_β. The reader can easily verify this fact by simulating a CE amplifier with a normal R_L value to obtain the current gain and then giving R_L a value of, say, 0.1 Ω, and comparing results.

It can be shown that the overall voltage gain response of a CE amplifier contains three corner frequencies: one dominant (the smallest) and the other two at much higher frequencies, typically beyond f_T. The only possible way of bringing one of those two corner frequencies relatively close to the dominant corner frequency is by physically adding shunt capacitance across the output. Normal stray and wiring capacitance across the output will not have much effect on the dominant corner frequency. On the other hand, because of the "amplified" C_{bc} (or C_μ) due to the Miller effect, the dominant corner frequency will be mostly influenced by that capacitance. As pointed out earlier, the frequencies f'_A and f'_B due to Miller-effect capacitances are not the true corner frequencies of the amplifier. Recall that the dominant corner frequency, which is the upper cutoff frequency f_H, can be closely approximated by

$$f_H \approx \frac{1}{\frac{1}{f'_A} + \frac{1}{f'_B}} \tag{9–68}$$

Equation 9–68 is another example of *duality* that we find so frequently in electric and electronic circuits. The upper cutoff frequency is found from a sum of frequency reciprocals, in contrast to the lower cutoff frequency which is the simple sum of the natural frequencies f_a and f_b (see equation 9–55).

Because β decreases with frequency, we would expect α to do the same. This is, in fact, the case, and the frequency at which α falls to 0.707 times its

Scanned with CamScanner

low-frequency value is called the *alpha cutoff frequency*, f_α. Because f_α is generally much larger than f_β, the common-base amplifier is not as frequency limited by parameter cutoff as is the common-emitter amplifier. A commonly used approximation is

$$f_\alpha \approx f_T$$

In specification sheets, f_T is often called the *gain-bandwidth product*. We will discuss this interpretation of a unity-gain frequency in Chapter 10. Recall that junction capacitance depends on the width of the depletion region, which in turn depends on the bias voltage. Because r'_e also depends on bias conditions, f_T is clearly a function of bias and is usually so indicated on specification sheets.

EXAMPLE 9–16

The transistor in Figure 9–36 has a low-frequency β of 120, $r'_e = 20\ \Omega$ and $r_o = 100\ \text{k}\Omega$. The interelectrode capacitances are $C_{be} = 40$ pF, $C_{bc} = 1.5$ pF, and $C_{ce} = 1$ pF. There is wiring capacitance equal to 4 pF across the input and 2 pF across the output. Find the approximate upper cutoff frequency.

Solution

To determine the Miller-effect capacitance, we must find the midband voltage gain of the transistor. Note that the *overall* voltage gain v_L/v_S is *not* used in this computation, because the gain reduction due to voltage division at the input does not affect the Miller capacitance. (It would, if the feedback capacitance were connected all the way back to v_S.)

$$A_v \approx \frac{-r_L}{r'_e} = \frac{-(4\ \text{k}\Omega)\,\|\,(20\ \text{k}\Omega)}{20\ \Omega} = -166.67$$

We use the midband gain for determining C_M:

$$C_M \approx C_{bc}(1 - A_v) = (1.5\ \text{pF})\,[1 - (-166.67)] = 251.5\ \text{pF}$$

The total capacitance shunting the input is, therefore,

$$C_A = C_{be} + C_M + C_{wiring} = (40\ \text{pF}) + (251.5\ \text{pF}) + (4\ \text{pF}) = 295.5\ \text{pF}$$

Then, since

$$r_{in} = R_1 \| R_2 \| \beta r'_e = (100\ \text{k}\Omega)\,\|\,(22\ \text{k}\Omega)\,\|\,(2.4\ \text{k}\Omega) = 2.1\ \text{k}\Omega$$

we have, from equation 9–59,

$$f_A = \frac{1}{2\pi(200\,\|\,2.1 \times 10^3)295.5 \times 10^{-12}} = 2.95\ \text{MHz}$$

Since $\quad r_{out} = r_o \| R_C = (100\ \text{k}\Omega)\,\|\,(4\ \text{k}\Omega) = 3.8\ \text{k}\Omega$

FIGURE 9–36 (Example 9–16)

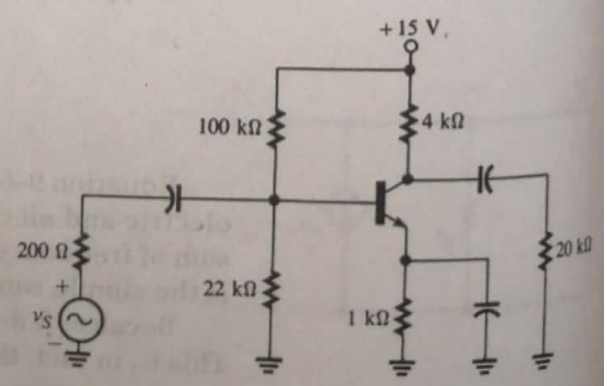

Scanned with CamScanner

and $$C_B = C_{ce} + C_{be}(1 - 1/A_v) + C_{wiring}$$
$$= (1\text{ pF}) + (1.5\text{ pF})(1 + 1/167) + (2\text{ pF}) = 4.5\text{ pF}$$

we have, from equation 9–63,

$$f_B = \frac{1}{2\pi(3.8 \times 10^3 \| 20 \times 10^3)(4.5 \times 10^{-12})} = 11.1\text{ MHz}$$

Therefore, from equation 9–68,

$$f_H \approx \frac{1}{\dfrac{1}{2.95} + \dfrac{1}{11.1}} = 2.33\text{ MHz}.$$

Because the common-base amplifier is noninverting, the shunt capacitance at its input does not have a Miller-effect component. Therefore, the CB amplifier is not as severely limited as its CE counterpart in terms of the upper cutoff frequency, and CB amplifiers are often used in high-frequency applications. We will discuss one such application, the *cascode* amplifier, below. We have also noted that f_α is generally much higher than f_β. The common-collector amplifier (emitter follower) is also noninverting and unaffected by Miller capacitance. It, too, is generally superior to the CE configuration for high-frequency applications.

Cascode Amplifier

A simple example of a *cascode* amplifier is shown in Figure 9–37. Note that Q_1 is a common-emitter stage that uses R_{B1} for "fixed" bias. Because capacitor C_B grounds the base of Q_2 to ac signals, Q_2 is a common-base stage. It serves as the load on the collector of Q_1. Recall that the input to a common-base stage is at its emitter and the output is taken at its collector. Thus Q_1 is direct-coupled to the input of Q_2 and the output of the cascode amplifier is at the collector of Q_2. Resistors R_1 and R_2 form a voltage-divider bias circuit for Q_2.

The principal advantage of the cascode arrangement is that it has a small input capacitance, an important consideration in high-frequency amplifiers. The input capacitance is small because the voltage gain of Q_1 is small (near unity), which means that the Miller capacitance is minimized. Most of the voltage gain is achieved in the common-base stage. The voltage gain of Q_1 is small because the effective load resistance in its collector circuit is the small input resistance of the common-base stage.

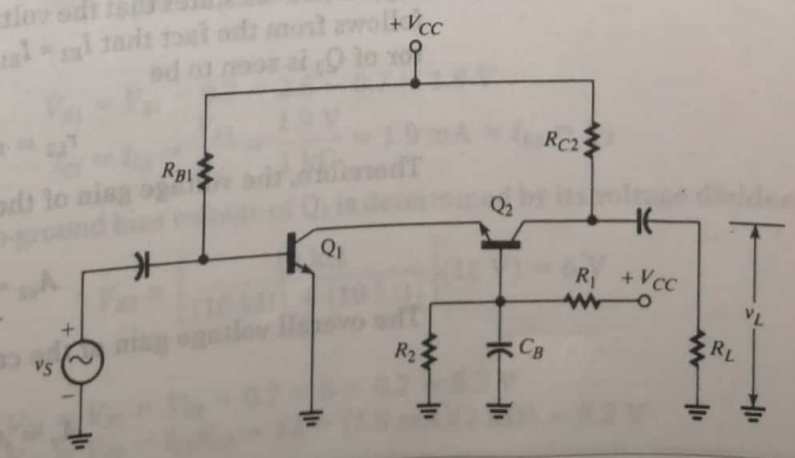

FIGURE 9–37 An example of a cascode amplifier. Q_1 is a common-emitter stage that is direct-coupled to the common-base stage formed by Q_2

Scanned with CamScanner

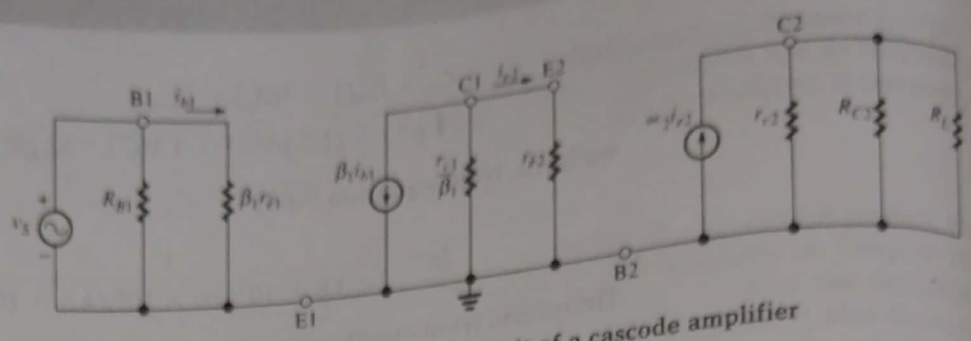

FIGURE 9–38 Small-signal equivalent circuit of a cascode amplifier

Calculation of the bias currents and voltages is straightforward:

$$I_{B1} = \frac{V_{CC} - V_{BE}}{R_{B1}}$$

$$I_{C1} = I_{E2} \approx I_{C2} = \beta_1 I_{B1}$$

$$V_{B2} = \left(\frac{R_2}{R_1 + R_2}\right) V_{CC}$$

$$V_{C1} = V_{E2} = V_{B2} - V_{BE}$$

$$V_{C2} = V_{CC} - I_{C2} R_{C2}$$

$$V_{CE2} = V_{C2} - V_{E2}$$

Q_1, like any other common-emitter stage, can also be biased using the voltage-divider method and an emitter resistor.

Figure 9–38 shows a small signal equivalent circuit of the cascode amplifier. The collector, base, and emitter terminals of each transistor are labeled in the diagram (C1, B1, etc.).

Referring to the equivalent circuit, we see that

$$r_{in} = R_{B1} \| \beta_1 r'_{e1}$$

Note that the input resistance of Q_2 is the small emitter resistance r'_{e2} of the common-base stage. The parallel combination of r_{c1}/β_1 and r'_{e2} form the ac load on the collector of Q_1. Since $r_{c1}/\beta_1 \gg r'_{e2}$,

$$r_{L1} = \left(\frac{r_{c1}}{\beta_1}\right) \Bigg\| \, r'_{e2} \approx r'_{e2}$$

Thus,

$$A_{v1} = \frac{-r_{L1}}{r'_{e1}} \approx \frac{-r_{e2}}{r'_{e1}} \approx -1 \tag{9–69}$$

Equation 9–69 states that the voltage gain of Q_1 is approximately unity, which follows from the fact that $I_{E2} \approx I_{E1}$, making $r'_{e2} \approx r'_{e1}$. The ac load on the collector of Q_2 is seen to be

$$r_{L2} = r_{c2} \| R_{C2} \| R_L \approx R_{C2} \| R_L$$

Therefore, the voltage gain of the second stage is

$$A_{v2} \approx \frac{r_{L2}}{r'_{e2}} \approx \frac{R_{C2} \| R_L}{r'_{e2}} \tag{9–70}$$

The overall voltage gain of the cascode is thus

$$A_v = A_{v1} A_{v2} \approx -\frac{R_{C2} \| R_L}{r'_{e2}} \tag{9–71}$$

Scanned with CamScanner

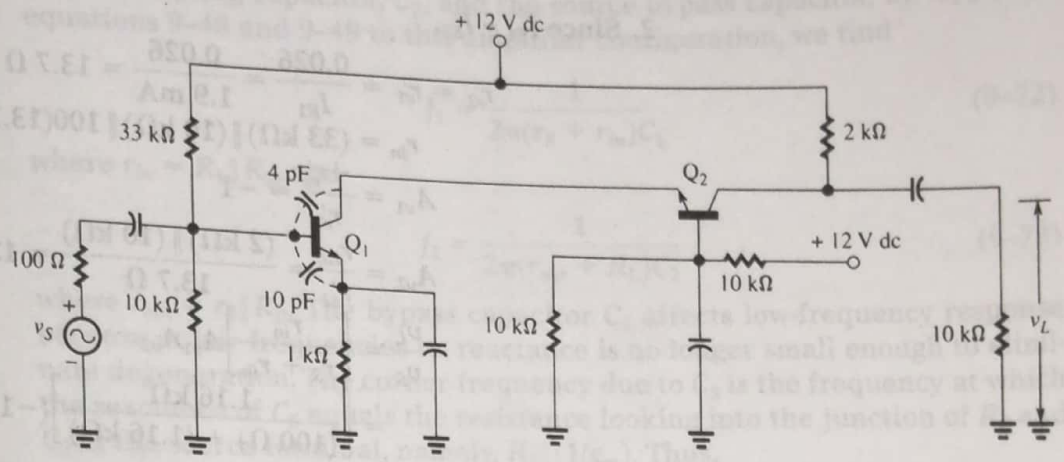

FIGURE 9–39 (Example 9–17)

Equation 9–71 shows that the common-base stage provides most of the voltage gain. The current gain of the cascode amplifier, not including current division at the input or output, is approximately

$$A_i \approx \beta_1\alpha_2 \approx \beta_1 \qquad \text{since } \alpha_2 \approx 1$$

The output resistance of the amplifier is

$$r_{out} = r_{c2} \| R_{C2} \approx R_{C2}$$

EXAMPLE 9–17

The silicon transistors in Figure 9–39 have the following parameter values:

$$Q_1\text{: } \beta_1 = 100,\ r_{c1} \approx \infty,\ C_{bc} = 4\text{ pF},\ C_{be} = 10\text{ pF}$$
$$Q_2\text{: } \alpha_2 \approx 1,\ r_{c2} \approx \infty$$

Find approximate values for

1. the dc currents and voltages I_{C1}, I_{C2}, V_{C1}, and V_{C2};
2. the small-signal voltage gain v_L/v_S; and
3. the break frequency f_A due to shunt capacitance at the input of Q_1.

Solution

1. The base-to-ground bias voltage at the input stage (Q_1) is determined by the voltage-divider there.

$$V_{B1} \approx \left[\frac{10\text{ k}\Omega \| 100\text{ k}\Omega}{(10\text{ k}\Omega \| 100\text{ k}\Omega) + (33\text{ k}\Omega)}\right](12\text{ V}) = 2.6\text{ V}$$

Therefore,

$$V_{E1} = V_{B1} - 0.7 = 2.6 - 0.7 = 1.9\text{ V}$$
$$I_{C1} \approx I_{E1} = \frac{V_{E1}}{R_{E1}} = \frac{1.9\text{ V}}{1\text{ k}\Omega} = 1.9\text{ mA} = I_{E2} \approx I_{C2}$$

The base-to-ground bias voltage of Q_2 is determined by its voltage divider:

$$V_{B2} = \left[\frac{10\text{ k}\Omega}{(10\text{ k}\Omega) + (10\text{ k}\Omega)}\right](12\text{ V}) = 6\text{ V}$$

Therefore,

$$V_{C1} = V_{E2} = V_{B2} - 0.7 = 6 - 0.7 = 5.3\text{ V}$$
$$V_{C2} = V_{CC} - I_{C2}R_{C2} = 12 - (1.9\text{ mA})(2\text{ k}\Omega) = 8.2\text{ V}$$

Scanned with CamScanner

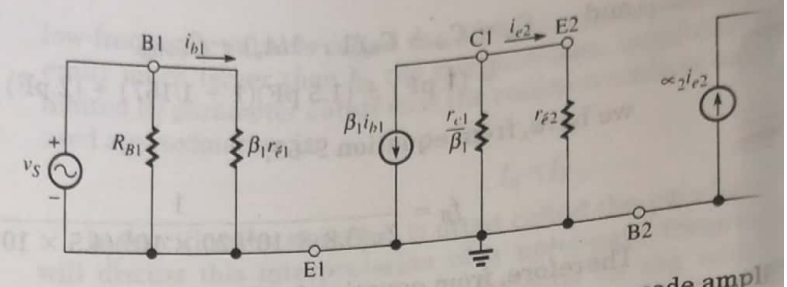

FIGURE 9–38 Small-signal equivalent circuit of a cascode ampl

Calculation of the bias currents and voltages is straig

$$I_{B1} = \frac{V_{CC} - V_{BE}}{R_{B1}}$$

$$I_{C1} = I_{E2} \approx I_{C2} = \beta_1 I_{B1}$$

$$V_{B2} = \left(\frac{R_2}{R_1 + R_2}\right) V_{CC}$$

$$V_{C1} = V_{E2} = V_{B2} - V_{BE}$$

$$V_{C2} = V_{CC} - I_{C2} R_{C2}$$

$$V_{CE2} = V_{C2} - V_{E2}$$

Q_1, like any other common-emitter stage, can also be voltage-divider method and an emitter resistor.

Figure 9–38 shows a small signal equivalent circuit of fier. The collector, base, and emitter terminals of each tra in the diagram (C1, B1, etc.).

Referring to the equivalent circuit, we see that

$$r_{in} = R_{B1} \| \beta_1 r'_{e1}$$

Note that the input resistance of Q_2 is the small emitt the common-base stage. The parallel combination of r_{c1}/β_1 load on the collector of Q_1. Since $r_{c1}/\beta_1 \gg r'_{e2}$,

$$r_{L1} = \left(\frac{r_{c1}}{\beta_1}\right) \Big\| r'_{e2} \approx r'_{e2}$$

Thus,

$$A_{v1} = \frac{-r_{L1}}{r'_{e1}} \approx \frac{-r_{e2}}{r'_{e1}} \approx -1$$

Equation 9–69 states that the voltage gain of Q_1 is approxi follows from the fact that $I_{E2} \approx I_{E1}$, making $r'_{e2} \approx r'_{e1}$. The ac tor of Q_2 is seen to be

$$r_{L2} = r_{c2} \| R_{C2} \| R_L \approx R_{C2} \| R_L$$

Therefore, the voltage gain of the second stage is

$$A_{v2} \approx \frac{r_{L2}}{r'_{e2}} \approx \frac{R_{C2} \| R_L}{r'_{e2}}$$

The overall voltage gain of the cascode is thus

$$A_v = A_{v1} A_{v2} \approx -\frac{R_{C2} \| R_L}{r'_{e2}}$$

Scanned with CamScanner

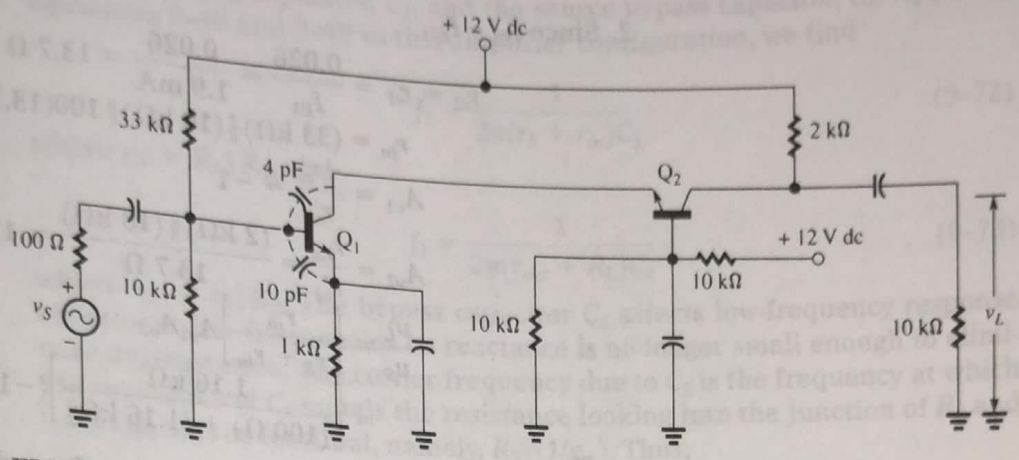

FIGURE 9–39 (Example 9–17)

Equation 9–71 shows that the common-base stage provides most of the voltage gain. The current gain of the cascode amplifier, not including current division at the input or output, is approximately

$$A_i \approx \beta_1\alpha_2 \approx \beta_1 \qquad \text{since } \alpha_2 \approx 1$$

The output resistance of the amplifier is

$$r_{out} = r_{c2} \| R_{C2} \approx R_{C2}$$

EXAMPLE 9–17

The silicon transistors in Figure 9–39 have the following parameter values:

$$Q_1\text{: } \beta_1 = 100,\ r_{c1} \approx \infty,\ C_{bc} = 4\text{ pF},\ C_{be} = 10\text{ pF}$$
$$Q_2\text{: } \alpha_2 \approx 1,\ r_{c2} \approx \infty$$

Find approximate values for

1. the dc currents and voltages I_{C1}, I_{C2}, V_{C1}, and V_{C2};
2. the small-signal voltage gain v_L/v_S; and
3. the break frequency f_A due to shunt capacitance at the input of Q_1.

Solution

1. The base-to-ground bias voltage at the input stage (Q_1) is determined by the voltage-divider there.

$$V_{B1} \approx \left[\frac{10\text{ k}\Omega \| 100\text{ k}\Omega}{(10\text{ k}\Omega \| 100\text{ k}\Omega) + (33\text{ k}\Omega)}\right](12\text{ V}) = 2.6\text{ V}$$

Therefore,

$$V_{E1} = V_{B1} - 0.7 = 2.6 - 0.7 = 1.9\text{ V}$$
$$I_{C1} \approx I_{E1} = \frac{V_{E1}}{R_{E1}} = \frac{1.9\text{ V}}{1\text{ k}\Omega} = 1.9\text{ mA} = I_{E2} \approx I_{C2}$$

The base-to-ground bias voltage of Q_2 is determined by its voltage divider:

$$V_{B2} = \left[\frac{10\text{ k}\Omega}{(10\text{ k}\Omega) + (10\text{ k}\Omega)}\right](12\text{ V}) = 6\text{ V}$$

Therefore,

$$V_{C1} = V_{E2} = V_{B2} - 0.7 = 6 - 0.7 = 5.3\text{ V}$$
$$V_{C2} = V_{CC} - I_{C2}R_{C2} = 12 - (1.9\text{ mA})(2\text{ k}\Omega) = 8.2\text{ V}$$

Scanned with CamScanner

2. Since $I_{E1} \approx I_{E2}$,

$$r'_{e2} \approx r'_{e1} = \frac{0.026}{I_{E1}} = \frac{0.026}{1.9\text{ mA}} = 13.7\ \Omega$$

$$r_{in} = (33\text{ k}\Omega) \parallel (10\text{ k}\Omega) \parallel 100(13.7\ \Omega) = 1.16\text{ k}\Omega$$

$$A_{v1} = \frac{-r'_{e2}}{r'_{e1}} \approx -1$$

$$A_{v2} = \frac{r_{L2}}{r'_{e2}} = \frac{(2\text{ k}\Omega) \parallel (10\text{ k}\Omega)}{13.7\ \Omega} = 121.6$$

$$\frac{v_L}{v_S} = \left[\frac{r_{in}}{r_S + r_{in}}\right] A_{v1}A_{v2}$$

$$= \left[\frac{1.16\text{ k}\Omega}{(100\ \Omega) + (1.16\text{ k}\Omega)}\right](-1)(121.6) = -112$$

3. The Miller capacitance at the input to Q_1 is determined by the voltage gain of stage 1 alone:

$$C_M = C_{bc}(1 - A_{v1}) = (4\text{ pF})(2) = 8\text{ pF}$$

The total input capacitance is, therefore,

$$C_A = C_M + C_{be} = (8\text{ pF}) + (10\text{ pF}) = 18\text{ pF}$$

Then

$$f_A = \frac{1}{2\pi[r_S \parallel r_{in}(\text{stage 1})]C_A} = \frac{1}{2\pi[100 \parallel (1.16 \times 10^3)](18 \times 10^{-12})}$$

$$= 96\text{ MHz}$$

We see that the break frequency due to input capacitance is quite high. While there may be break frequencies elsewhere in the circuit, the cascode amplifier effectively eliminates the most troublesome source of high-frequency loss—the input Miller capacitance.

9–7 FREQUENCY RESPONSE OF FET AMPLIFIERS

Low-Frequency Response of FET Amplifiers

Figure 9–40 shows a common-source JFET amplifier biased using the combination of self-bias and a voltage divider, as studied in Chapter 5. For our purposes now, the FET could also be a MOSFET. The capacitors that affect the low-frequency response are the input coupling capacitor, C_1, the

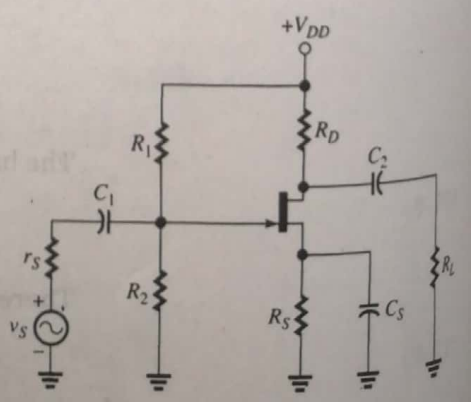

FIGURE 9–40 The low-frequency response of an FET amplifier is affected by capacitors C_1, C_2, and C_S

Scanned with CamScanner

output coupling capacitor, C_2, and the source bypass capacitor, C_S. Applying equations 9–48 and 9–49 to this amplifier configuration, we find

$$f_1 = \frac{1}{2\pi(r_S + r_{in})C_1} \tag{9–72}$$

where $r_{in} \approx R_1 \| R_2$, and

$$f_2 = \frac{1}{2\pi(r_{out} + R_L)C_2} \tag{9–73}$$

where $r_{out} = r_d \| R_D$. The bypass capacitor C_S affects low-frequency response because at low frequencies its reactance is no longer small enough to eliminate degeneration. The corner frequency due to C_S is the frequency at which the reactance of C_S equals the resistance looking into the junction of R_S and C_S at the source terminal, namely, $R_S \| (1/g_m)$. Thus,

$$f_S = \frac{1}{2\pi[R_S \| (1/g_m)]C_S} \tag{9–74}$$

Since the bias resistors R_1 and R_2 are usually very large in an FET amplifier, the input coupling capacitor C_1 can be smaller than its counterpart in a BJT CE amplifier, and C_1 does not generally determine the low-frequency cutoff. The small value of $R_S \| (1/g_m)$ makes the source bypass capacitor the most troublesome, in that a large amount of capacitance is required to achieve a small value of f_S.

EXAMPLE 9–18

The FET shown in Figure 9–41 has $g_m = 3.4$ mS and $r_d = 100$ kΩ. Find the approximate lower cutoff frequency.

Solution

$$r_{in} \approx (1.5\ \text{M}\Omega) \| (330\ \text{k}\Omega) = 270\ \text{k}\Omega$$

$$f_1 = \frac{1}{2\pi(20 \times 10^3 + 270 \times 10^3)(0.02 \times 10^{-6})} = 27.4\ \text{Hz}$$

$$r_{out} = (100\ \text{k}\Omega) \| (2\ \text{k}\Omega) = 1.96\ \text{k}\Omega$$

$$f_2 = \frac{1}{2\pi(1.96 \times 10^3 + 40 \times 10^3)(0.02 \times 10^{-6})} = 189.6\ \text{Hz}$$

$$R_S \| (1/g_m) = 820 \| 294.1 = 216.5\ \Omega$$

$$f_S = \frac{1}{2\pi(216.5)(1 \times 10^{-6})} = 735.1\ \text{Hz}$$

The actual lower cutoff frequency is approximately equal to the largest of the three corner frequencies, namely, $f_H \approx 735.1$ Hz.

FIGURE 9–41 (Example 9–18)

$R_S \| (1/g_m)$

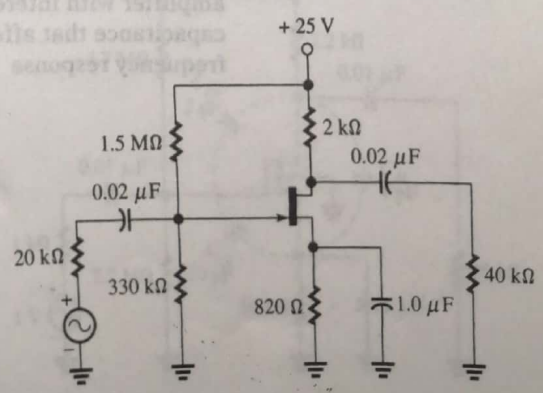

Scanned with CamScanner

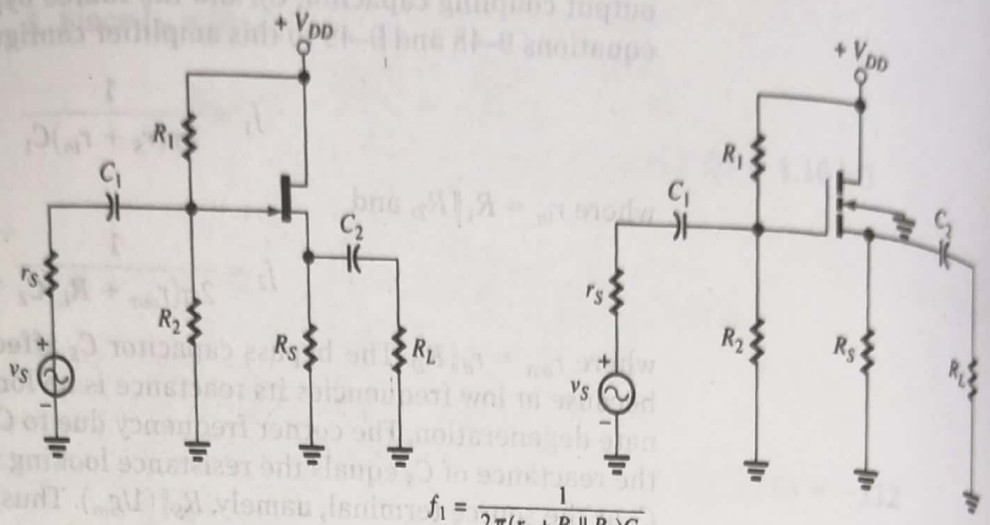

$$f_1 = \frac{1}{2\pi(r_S + R_1 \| R_2)C_1}$$

$$f_2 = \frac{1}{2\pi[R_S \| (1/g_m) + R_L]C_2}$$

FIGURE 9–42 Low-frequency cutoff equations for the common-drain amplifier

Figure 9–42 shows JFET and MOSFET amplifiers in the common-drain (source-follower) configuration and gives the equations for f_1 and f_2. These equations are obtained in a straightforward manner using the same low-frequency cutoff theory we have discussed for general amplifiers.

For design purposes, each of the equations for f_1, f_2, or f_S in each of the three configurations is easily solved for C_1, C_2, or C_S, giving a set of capacitor equations similar to equations 9–56 through 9–58.

High-Frequency Response of FET Amplifiers

Like the BJT common-emitter amplifier, the FET common-source amplifier is affected by Miller capacitance that often determines the upper cutoff frequency. Figure 9–43 shows a common-source amplifier and the interelectrode capacitance that affects its high-frequency performance. Because R_S is completely bypassed at high frequencies, C_{gs} and C_{ds} are effectively shunting the input and output, respectively, to ground. The equations for f'_A and f'_B are obtained directly from the general high-frequency cutoff theory we have studied:

$$f'_A = \frac{1}{2\pi(r_S \| r_{in})C'_A} \tag{9–75}$$

where $C'_A = C_{gs} + C_M = C_{gs} + C_{gd}(1 - A_v)$ and $r_i = r_{in} \approx R_1 \| R_2$, and

FIGURE 9–43 Common-source amplifier with interelectrode capacitance that affects high-frequency response

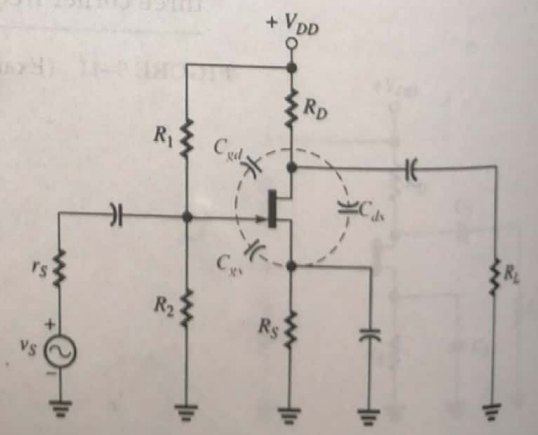

Scanned with CamScanner

$$f_B' = \frac{1}{2\pi(r_{out} \| R_L)C_B'} \tag{9–76}$$

where $C_B' = C_{ds} + C_{gd}(1 - 1/A_v)$ and $r_{out} = r_d \| R_D$.

EXAMPLE 9–19

The JFET in Figure 9–43 has $g_m = 3.2$ mS, $r_d = 100$ kΩ, $C_{gs} = 4$ pF, $C_{ds} = 0.5$ pF, and $C_{gd} = 1.2$ pF. The wiring capacitance shunting the input is 2.5 pF and that shunting the output is 4 pF. The component values in the circuit are

$$r_S = 20\ \text{k}\Omega \quad R_D = 2\ \text{k}\Omega$$
$$R_1 = 1.5\ \text{M}\Omega \quad R_S = 820\ \Omega$$
$$R_2 = 330\ \text{k}\Omega \quad R_L = 40\ \text{k}\Omega$$

Find the approximate upper cutoff frequency.

Solution

$$A_v = -g_m(r_d \| R_D \| R_L) = -3.2 \times 10^{-3}[(100\ \text{k}\Omega) \| (2\ \text{k}\Omega) \| (40\ \text{k}\Omega)] = -6$$
$$C_M = (1.2\ \text{pF})[1 - (-6)] = 8.4\ \text{pF}$$
$$C_A = C_{gs} + C_M + C_{(wiring)} = (4\ \text{pF}) + (8.4\ \text{pF}) + (2.5\ \text{pF}) = 14.9\ \text{pF}$$
$$r_{in} = (1.5\ \text{M}\Omega) \| (330\ \text{k}\Omega) = 270\ \text{k}\Omega$$
$$f_A = \frac{1}{2\pi(20 \times 10^3 \| 270 \times 10^3)(14.9 \times 10^{-12})} = 573.6\ \text{kHz}$$
$$C_B = C_{ds} + C_{gd}(1 - 1/A_v) + C_{(wiring)}$$
$$= (0.5\ \text{pF}) + (1.2\ \text{pF})(1 + 1/6) + (4\ \text{pF}) = 5.9\ \text{pF}$$
$$r_{out} = (100\ \text{k}\Omega) \| (2\ \text{k}\Omega) = 1.96\ \text{k}\Omega$$
$$f_B = \frac{1}{2\pi(1.96 \times 10^3 \| 40 \times 10^3)(5.9 \times 10^{-12})} = 14.43\ \text{MHz}$$

Therefore, using equation 9–68, $f_H \approx 552$ kHz.

EXAMPLE 9–20

PSPICE

Use PSpice and Probe to determine the lower and upper cutoff frequencies of the MOSFET amplifier shown in Figure 9–44. The capacitances C_{gs}, C_{gd}, and C_{ds} shown in the figure represent stray capacitance and should be included in the input circuit file. The MOSFET transistor has VTO = 2 and KP = 0.5E − 3. Let other parameters default.

FIGURE 9–44 (Example 9–20)

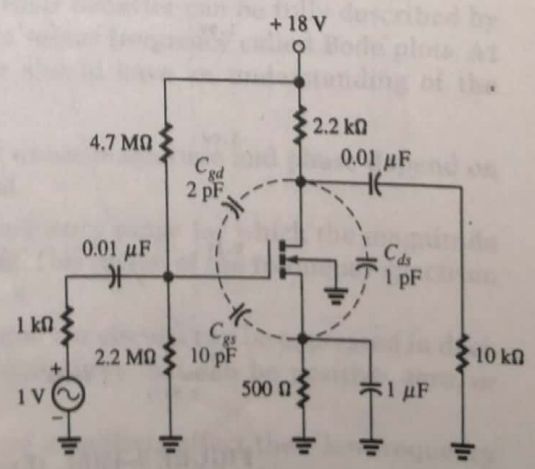

Scanned with CamScanner

Solution

The PSpice circuit and input circuit file are shown in Figure 9–45(a). A plot of the voltage across the load resistance, V(7), as displayed by Probe, is shown in Figure 9–45(b). We see that the maximum load voltage is 2.5 V. Therefore, the lower and upper cutoff frequencies occur where the load voltage is 0.707(2.5 V) = 1.767 V. As shown in the Probe display, cursor C1 is moved to a point on the plot where the voltage equals 1.768 V, and we see that the lower cutoff frequency is 142.5 Hz. C2 is moved to 1.768 V at the high-frequency end of the plot, and we see that the upper cutoff frequency is 8.052 MHz.

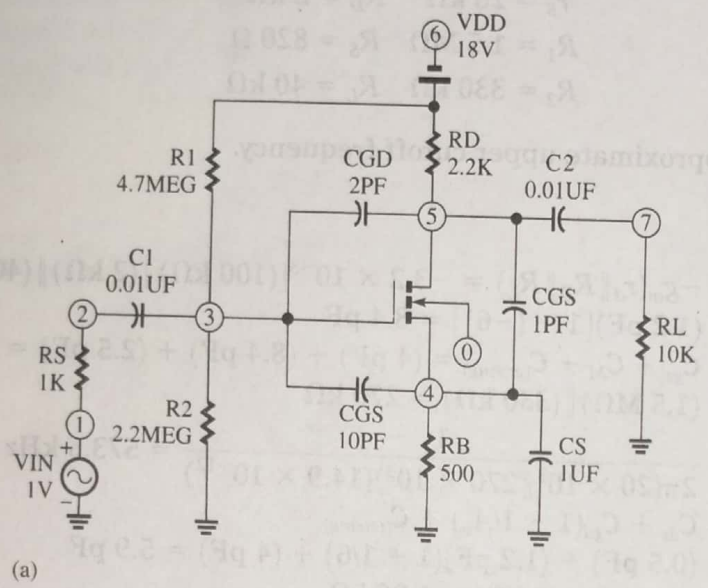


```
EXAMPLE 9-20
VIN 1 0 AC 1V
VDD 6 0 18V
RS 1 2 1K
C1 2 3 0.01UF
R1 6 3 4.7MEG
R2 3 0 2.2MEG
RD 5 6 2.2K
RB 4 0 500
CGD 3 5 2PF
CGS 3 4 10PF
CDS 5 4 1PF
CS 4 0 1UF
CL 5 7 0.01UF
RL 7 0 10K
M1 5 3 4 0 MOSFET
.MODEL MOSFET NMOS VTO=2 KP=0.5E-3
.AC DEC 10 1K 10MEG
.PROBE
.END
```

FIGURE 9–45(a) (Example 9–20)

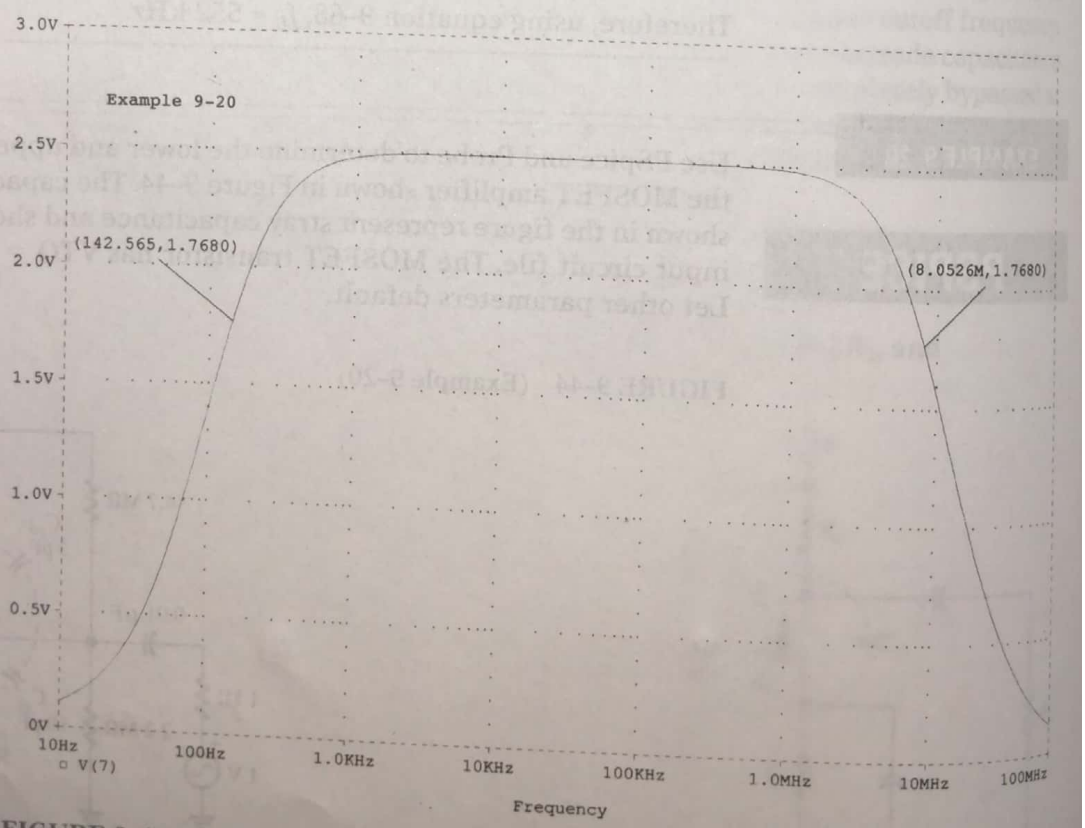

FIGURE 9–45(b) (Example 9–20)

Scanned with CamScanner

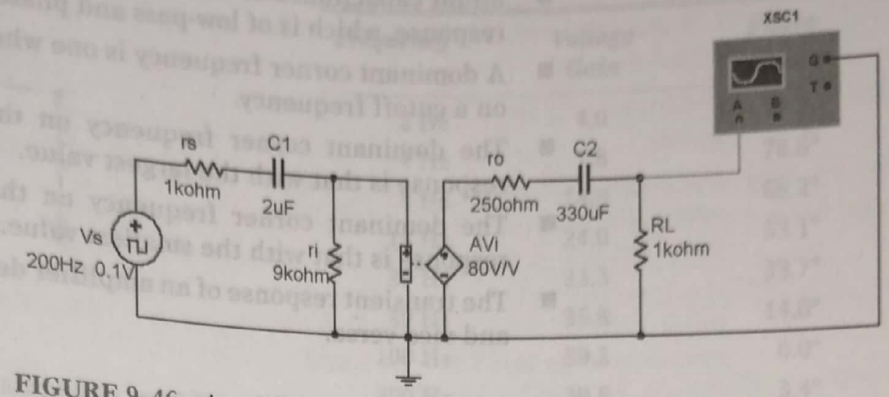

FIGURE 9–46 Amplifier circuit for experimenting with the sag of a square waveform

9–8 MULTISIM EXERCISE

Our objective for this exercise is to reinforce the concept of transient response due to the low-frequency response of an amplifier. The sagging in an amplified square waveform is caused by lack of low-frequency response. No sagging will occur, however, if the amplifier can respond to dc or zero frequency.

Figure 9–46 shows an amplifier modeled with a VCVS. It is capacitively coupled to the input source and to the load. The input signal is a square wave from a clock source. Before you start the simulation, double-click on the oscilloscope and set up the vertical scale to 2 V/div and the horizontal scale to 2 ms/div.

Start the simulation and wait until the output waveform reaches a steady-state condition. With the cursors, measure both the peak (maximum) voltage and the sagging voltage, and then compute the actual sag of the waveform. With the sag, determine the expected lower cutoff frequency f_L and compare to the value calculated from the circuit, which is approximately 8 Hz.

SUMMARY

This chapter has presented a general concept of how amplifiers respond to ac signals of different frequencies. Their behavior can be fully described by graphs of gain magnitude and phase versus frequency called Bode plots. At the end of this chapter the reader should have an understanding of the following concepts:

- An amplifier has a voltage gain whose magnitude and phase depend on the frequency of the input signal.
- Amplifiers have a fairly wide frequency range for which the magnitude of the gain is essentially constant. This region of the frequency spectrum is called the mid-frequency range.
- Gains and attenuations in amplifiers or circuits can be expressed in decibels. Decibels are logarithmic quantities that can be positive, zero, or negative.
- Series capacitance in circuits and amplifiers affect their low-frequency response, which is of high-pass and phase-lead nature.

Scanned with CamScanner