# ELECTRICAL

# LAB MANUAL

## POWER SYSTEM ANALYSIS LAB

**Hamza Mobeen** **2018-EE-394**

Lab Instructor
Mr.Rameez Javed

Department of Electrical and Electronics Engineering.

University of Engineering and Technology, Lahore.

Faisalabad Campus.

# Table of Experiments

| Sr Number | Date: | Experiments |
|---|---|---|
| 1 | 7-April-2021 | Basic Concepts of AC Power |
| 2 | 14-April-2021 | Analysis of a single-phase power system using Simpower Systems block set of Matlab/Simulink |
| 3 | 21-April-2021 | Analysis of a Three-Phase Power System by using Simpower System Blockset of Matlab. |
| 4 | 28-April-2021 | Analysis of a Three-Phase Power System (Y-Y and Y-Delta) in MATLAB/ Simulink |
| 5 | 5-May-2021 | $Y_{bus}$ matrix for Power System Calculations |
| 6 | 19-May-2021 | $Z_{bus}$ matrix for Power System Calculations |
| 7 | 26-May-2021 | Introduction to Power World Simulator. |
| 8 | 2-June-2021 | To apply Shunt Capacitive Compensation in a Transmission lines |
| 9 | 9-June-2021 | To apply Series Capacitive Compensation in a Transmission lines |
| 10 | 16-June-2021 | Voltage Regulation |
| 11 | 23-June-2021 | Analysis of system containing Regulating Transformer |
| 12 | 30-june-2021 | Power flow solution by Gauss-Seidel Method using Power World Simulator (PWS) |
| 13 | 7-July-2021 | Power flow solution by Newton-Raphson Method using Power World Simulator (PWS) |
| 14 | 26-July-2021 | Open ended lab (2018-EE-394) |

| | |
|---|---|
| **Name** | **Hamza Mobeen** |
| **Reg. #** | **2018-EE-394** |
| **Date** | **4/07/2021** |
| **Marks** | |

**EXPERIMENT # 1**

# Basic Concepts of AC Power

**Objectives:**

To learn/ visualize some of the basic concepts related to power flow in AC circuits.

**Lab Tasks:**

Simulate an RL circuit in MATLAB by joining a resistive branch in parallel with an inductive branch. Attach voltage source to the RL branch. Perform the following tasks:

1. Display instantaneous load power (RL load) on scope.
2. Display instantaneous power consumed in Resistive branch.
3. Display instantaneous power in inductive branch.

**Theory:**

Electrical power is the rate of consumption of electrical energy. The unit of power is Watt. The power in Watts being absorbed by a load at any instant is the product of instantaneous voltage drop across it in volts and instantaneous current into it in amperes. For a load with terminals 'a' and 'n'; having terminal voltage and current given as:

$$v_{an} = V_{\max} \cos (wt)$$

and

$$i_{an} = I_{\max} \cos (wt - \theta)$$

the instantaneous power is

$$p = v_{an}\, i_{an} = V_{\max}\, I_{\max} \cos (wt) \cos (wt - \theta)$$

The angle θ is positive for lagging current and negative for leading current. A positive value of p expresses the rate at which energy is being absorbed by the part of the system between the points *a* and *n*. The instantaneous power is obviously positive when both $v_{an}$ and $i_{an}$ are opposite in sign. Positive power results when current is flowing in the direction of voltage drop and is the rate of transfer of energy to the load. Conversely, negative power results when current is flowing in the direction of voltage rise and means energy is being transferred from the load into the system to which the load is connected. If $v_{an}$ and $i_{an}$ are in phase, as they are in a purely resistive load, the instantaneous power will never become

negative. If the current and voltage are out of phase by 90°, as in a purely inductive or purely capacitive ideal circuit element, the instantaneous power will have equal positive and negative half cycles and its average value will always be zero.

By using trigonometric identities the expression of above equation is reduced to

$$p = (V_{max}\, I_{max}/2)\,(\cos\theta)\,(1 + \cos 2\omega t) + (V_{max}\, I_{max}/2)\,(\sin\theta)\,\sin 2\omega t$$

where Vmax and Imax are peak values of total load voltage and total current. In terms of rms values,

$$p = (V_{rms}\, I_{rms})\,(\cos\theta)\,(1 + \cos 2\omega t) + (V_{rms}\, I_{rms})\,(\sin\theta)\,\sin 2\omega t$$

In terms of resistor current $I_{R\text{-}rms}$ ($I_{R\text{-}rms} = I_{rms} \cos\theta$) and inductor current $I_{L\text{-}rms}$ ($I_{L\text{-}rms} = I_{rms} \sin\theta$)

$$p = (V_{rms}\, I_{R\text{-}rms})\,(1 + \cos 2\omega t) + (V_{rms}\, I_{L\text{-}rms})\,\sin 2\omega t$$

**Diagram: (Attach snapshot of your Simulink figure with meters and scope)**

Use Vs-pk = 1V, f=50Hz, R=1Ω, $X_L$ = 1Ω

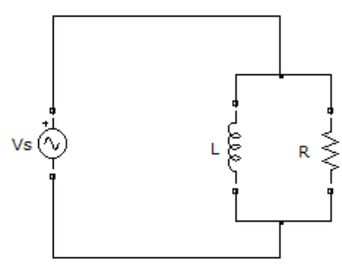


**Simulink:**

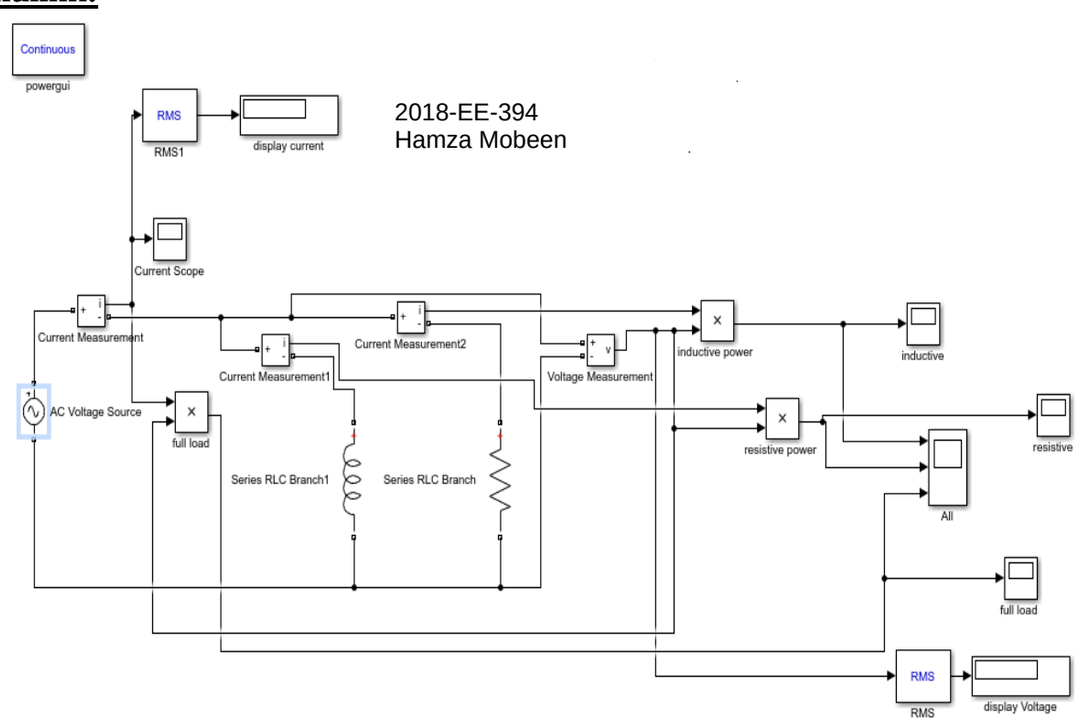


**Figure 1.1a simulation**

**All powers:**

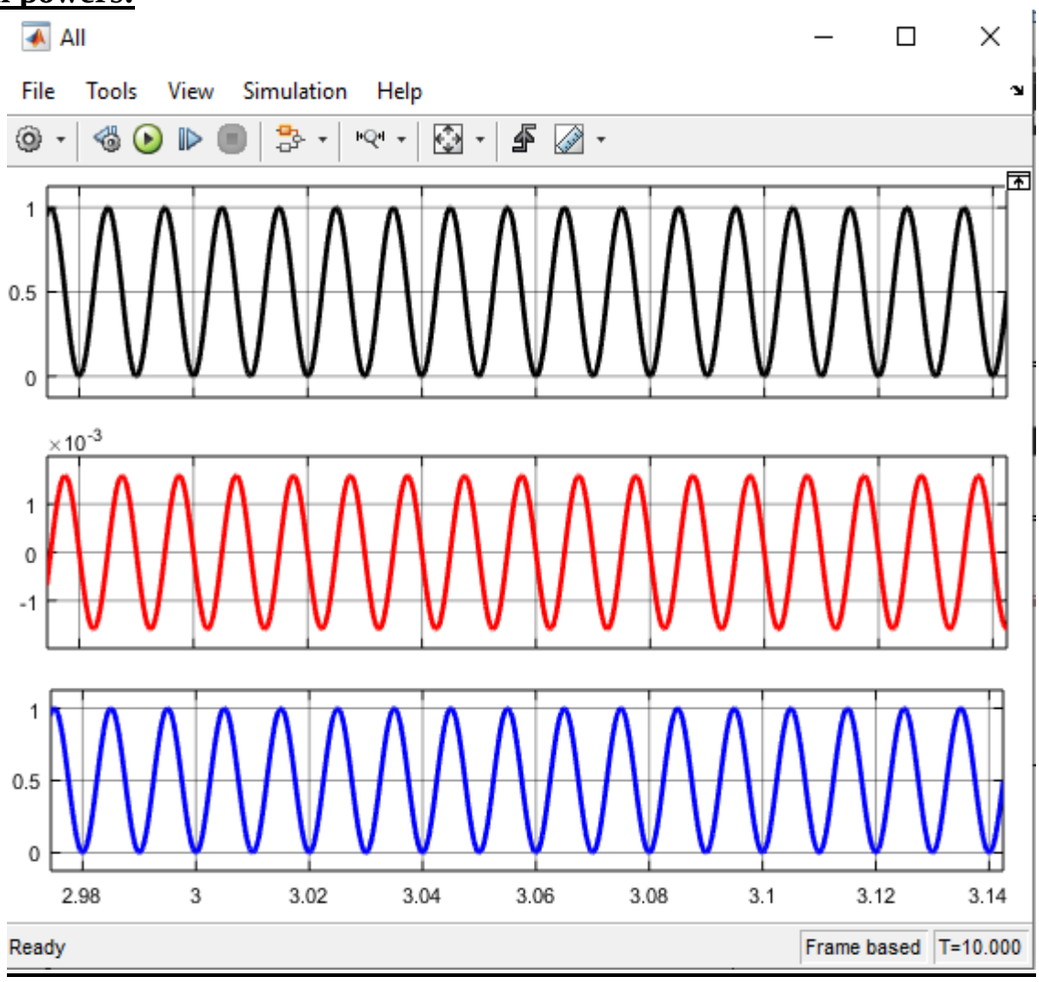


**Figure 1.1b loads powers of Simulink**

**Observations and results:**

| Instantaneous Load Power | Observations / Comments |
|---|---|
| 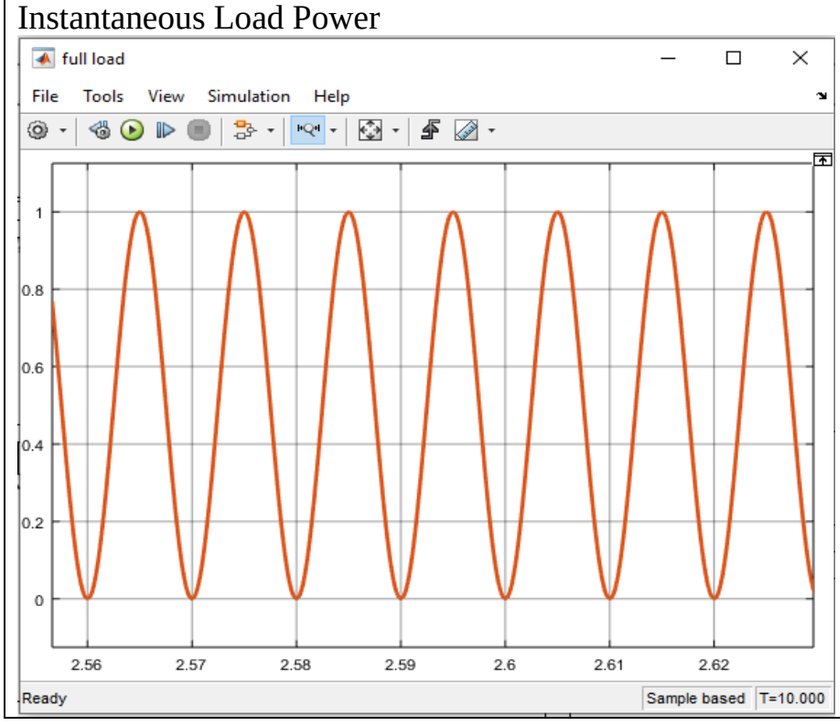 | The average value of the instantaneous power is the real power provided to the load. Real power consumed in an RL load circuit for AC voltages is solely for the resistive component. |

| Instantaneous Power of Resistive Branch | Observations / Comments |
|---|---|
| 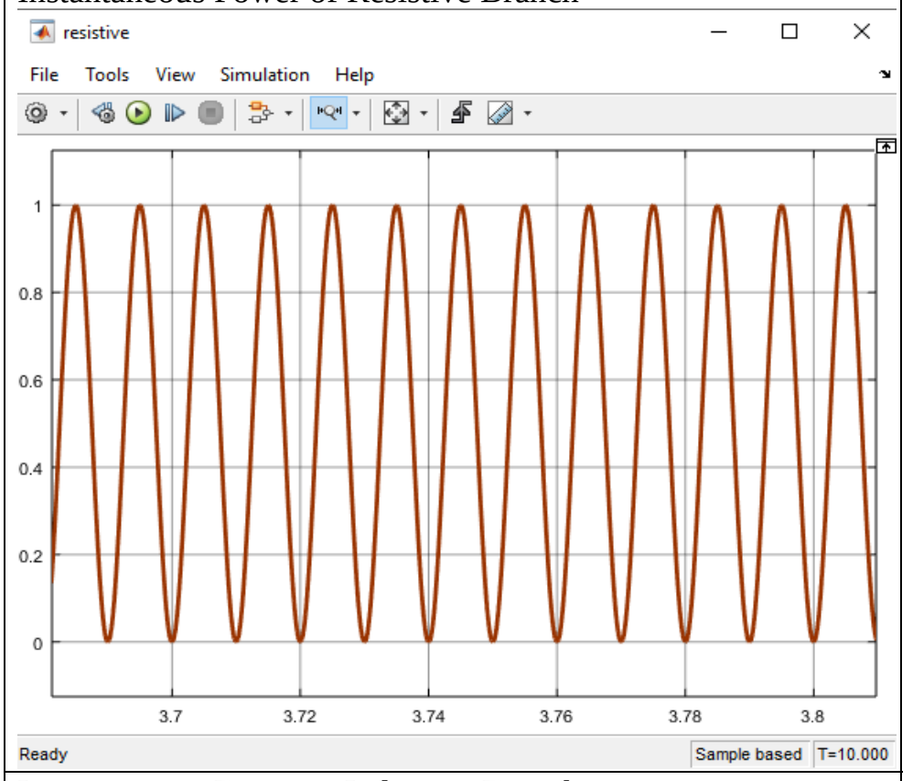  | Power across resistor is from 0 to1 |
| Instantaneous Power in Inductive Branch | Observations / Comments |
| 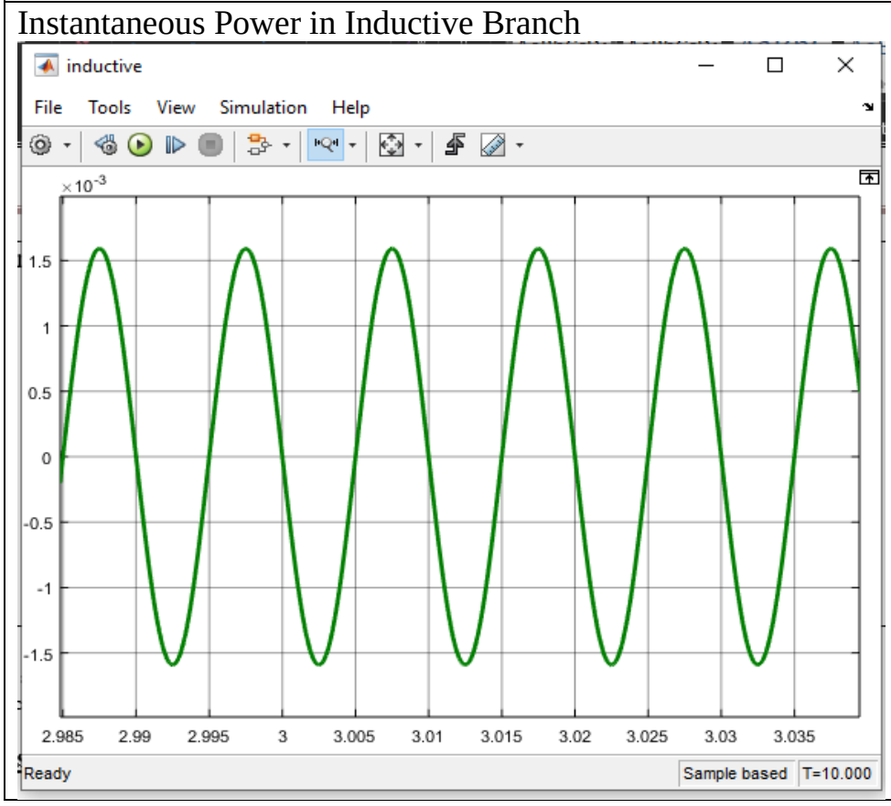  | Instantaneous inductive power start from 0 to 1.5 to -1.5 it has equal positive and negative cycle that's why average power will be zero |

1. Calculate power factor of following circuit in Task 2.

**Schematics Diagram:**

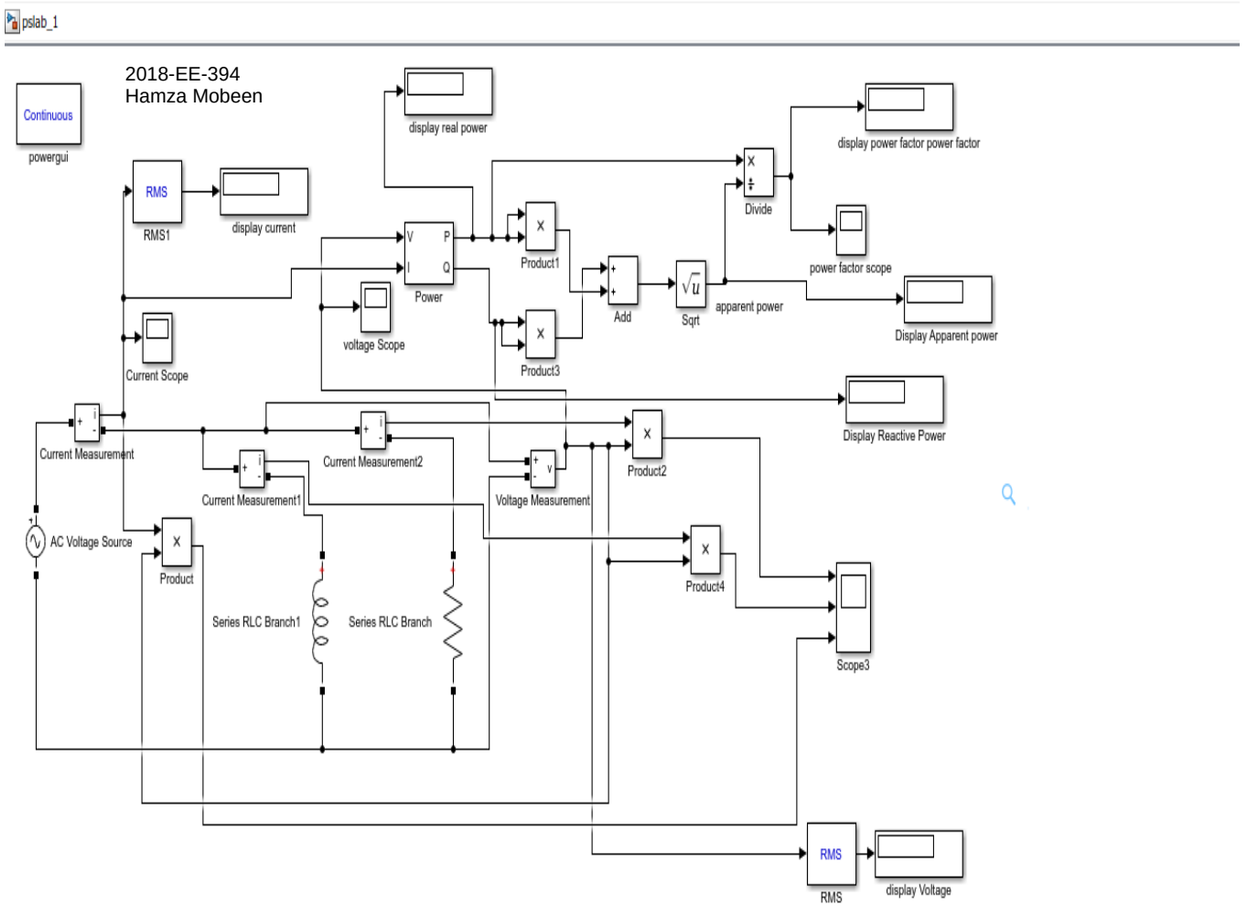


**Figure 1.1 schematic diagram of AC circuit**

**Task 1:**

**Resistance:**

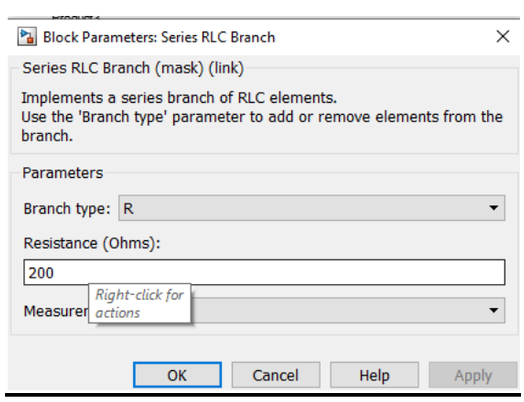


**Figure 1.2 resistance value**

## Inductance:

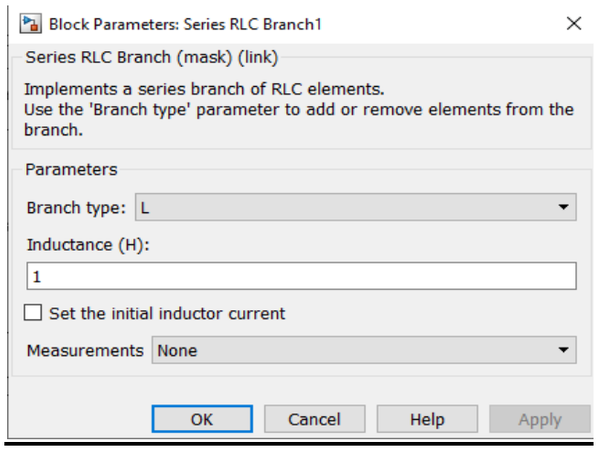


**Figure 1.3 inductance value**

## Output schematic:

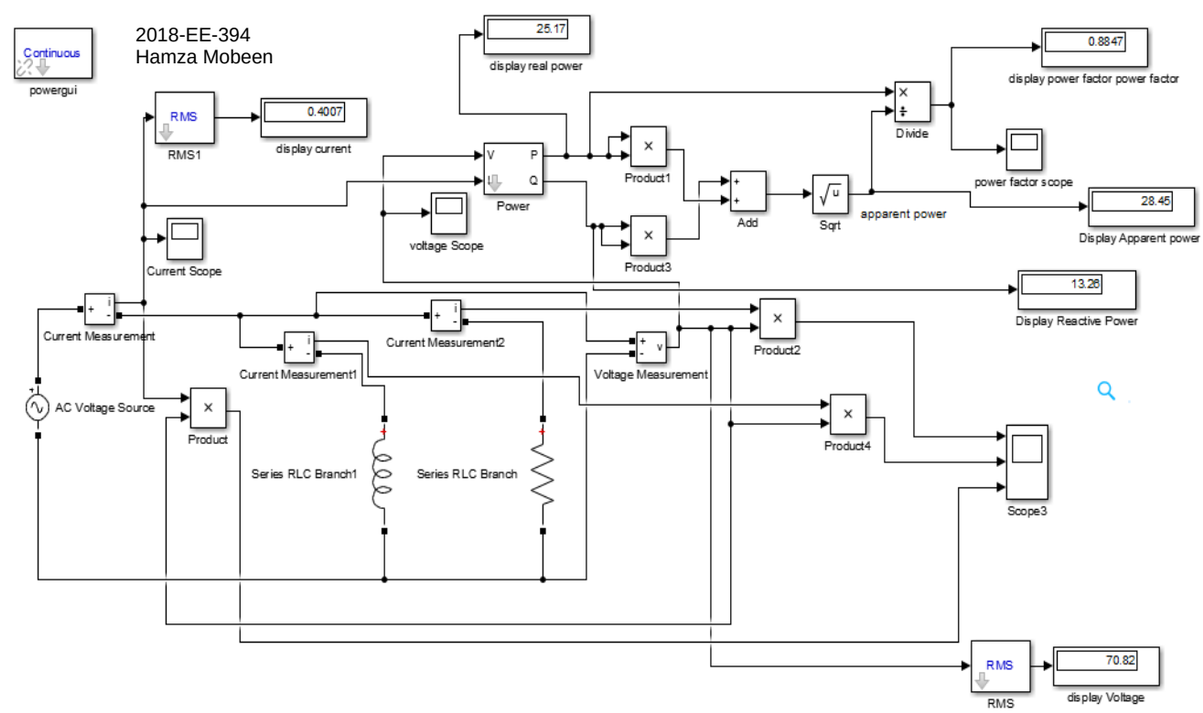


**Figure 1.4 output values on schematic diagram**

**Current scope:**

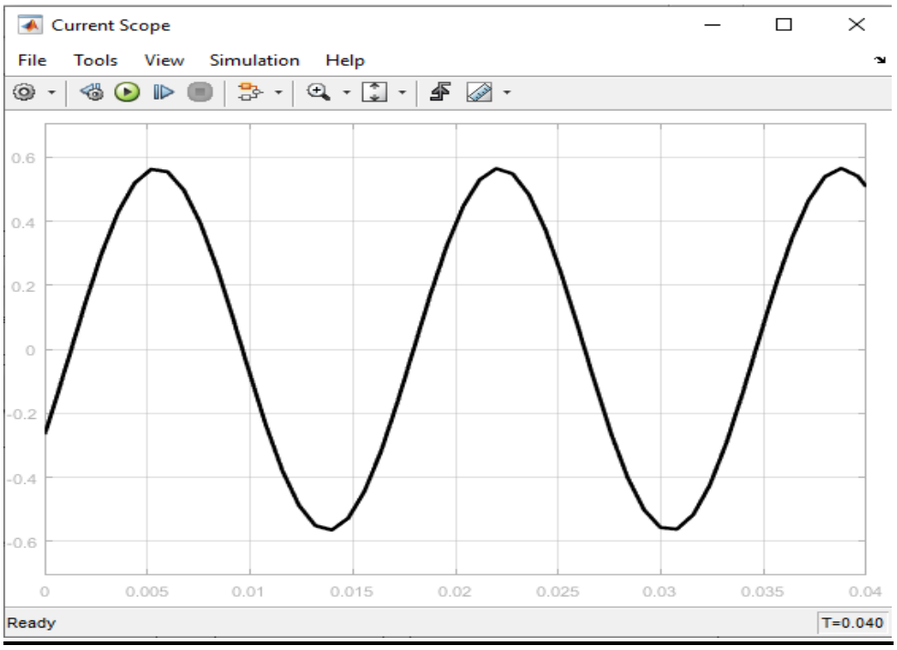


**Figure 1.5 current signal**

**Voltage scope:**

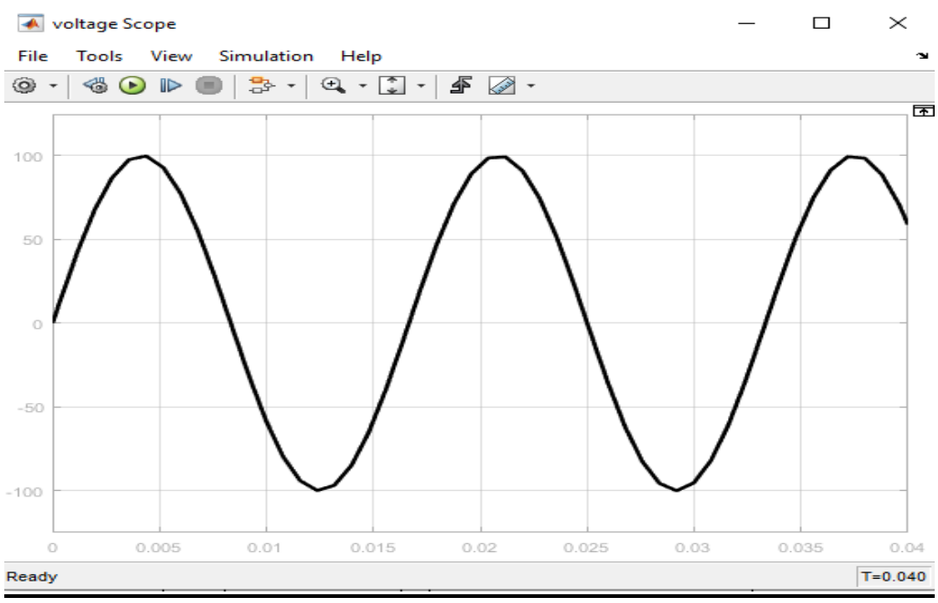


**Figure1.6 voltage signal**

**Output powers scope:**

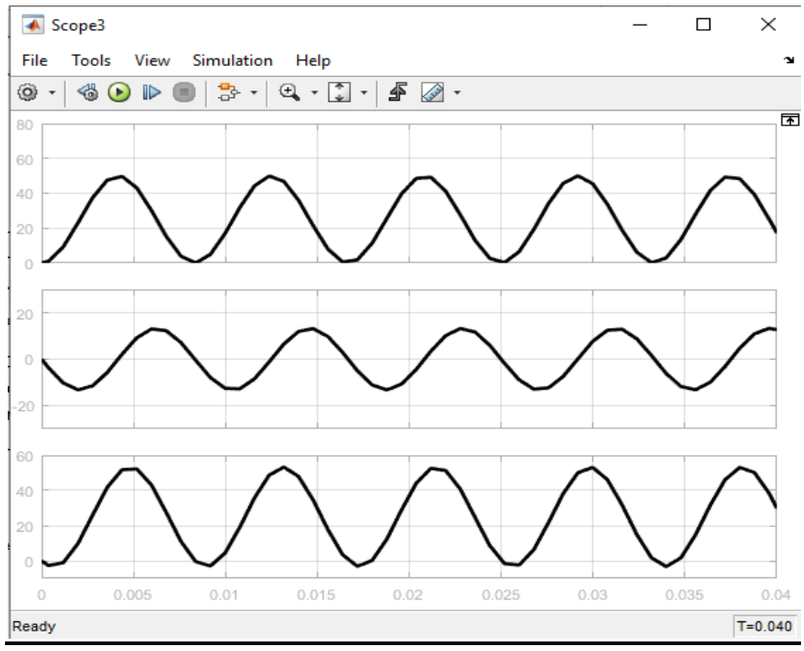


**Figure 1.7 powers signal**

**Power factor scope:**

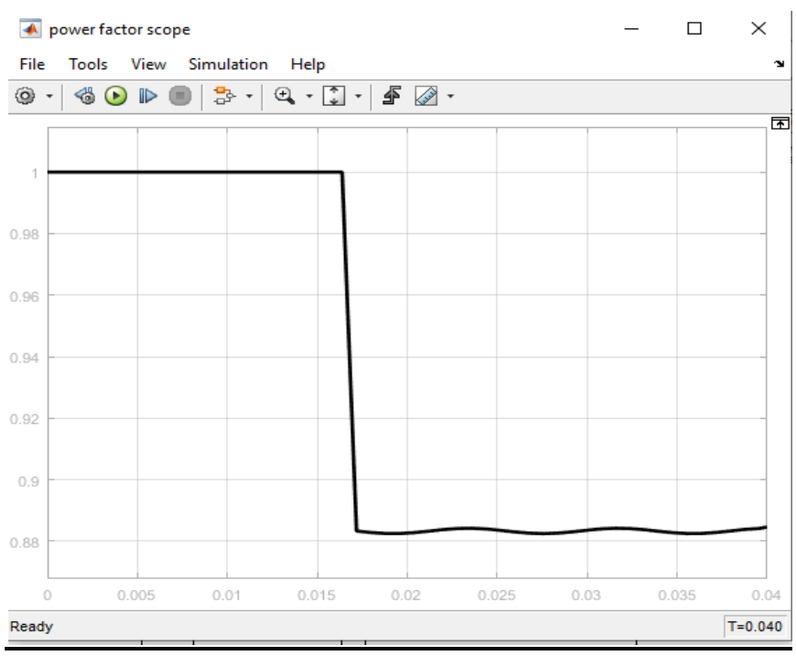


**Figure 1.8 power factor signals**

**Theoretical:**

2018-EE-394 Hamza Mobeen

$R = 200\Omega$ , $L = 1H$ $I = 0.4007A$, $V = 70.82V$

$\cos\theta = 0.8847$

Real Power $= P = VI\cos\theta = 25.1056kW$.

Reactive Power $= Q = VI\sin\theta = 13.2285$ Var

Apparent Power $= S = VI\sqrt{P^2+Q^2} = 28.3775$ VA.

**Figure 1.9 calculations of all powers**

**Task 2:**

**Resistance:**

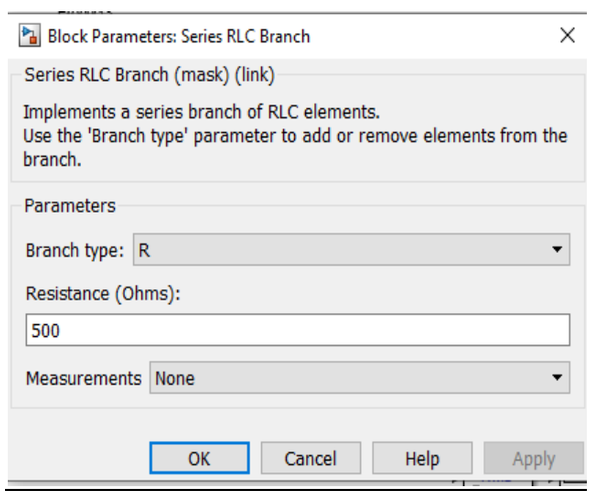


**Figure 1.10 resistance value**

**Inductance:**

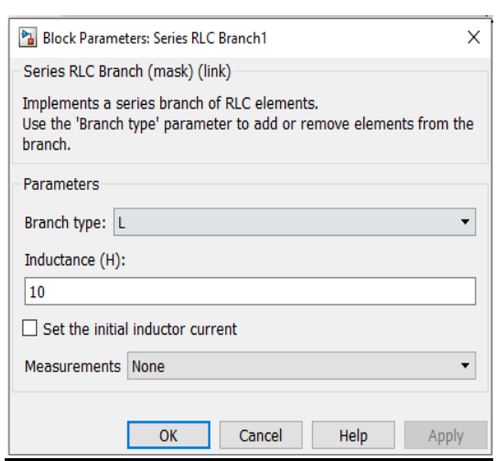


**Figure 1.11 inductance value**

## Output schematics:

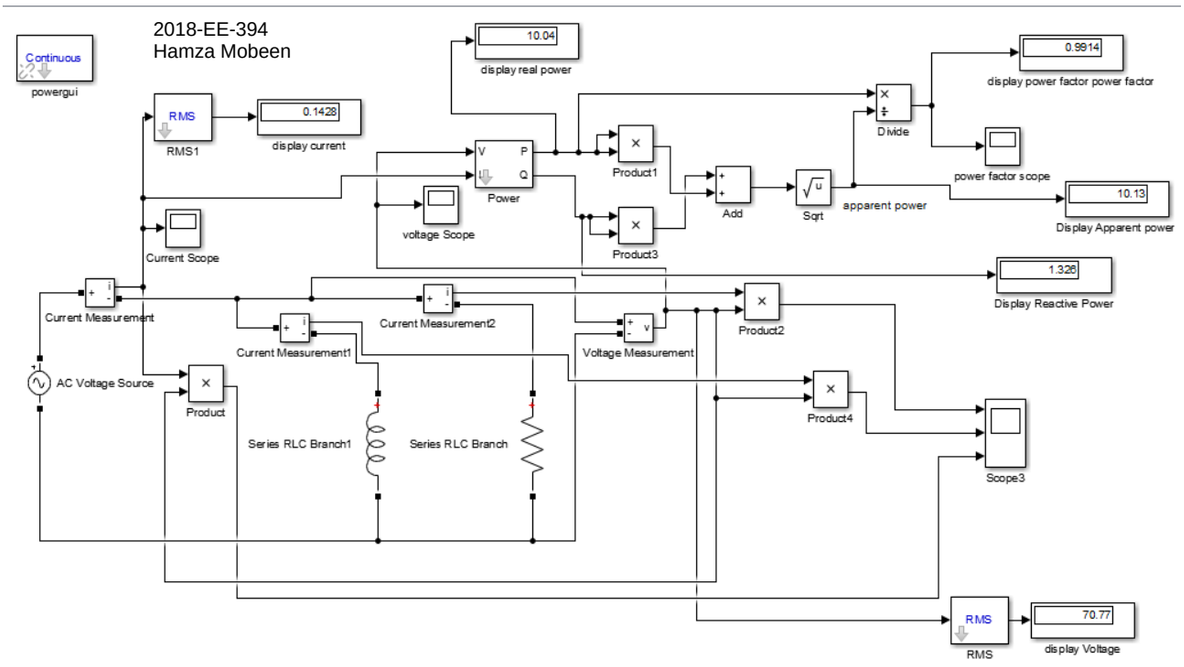


**Figure 1.12 output value of schematic**

## Power factor scope:

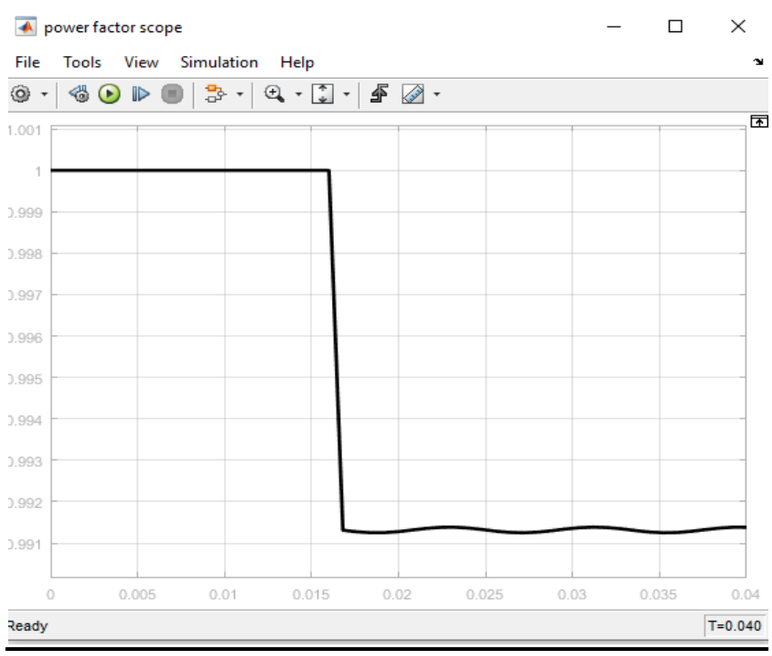


**Figure1.13 power factor signal**

**Output power scope:**

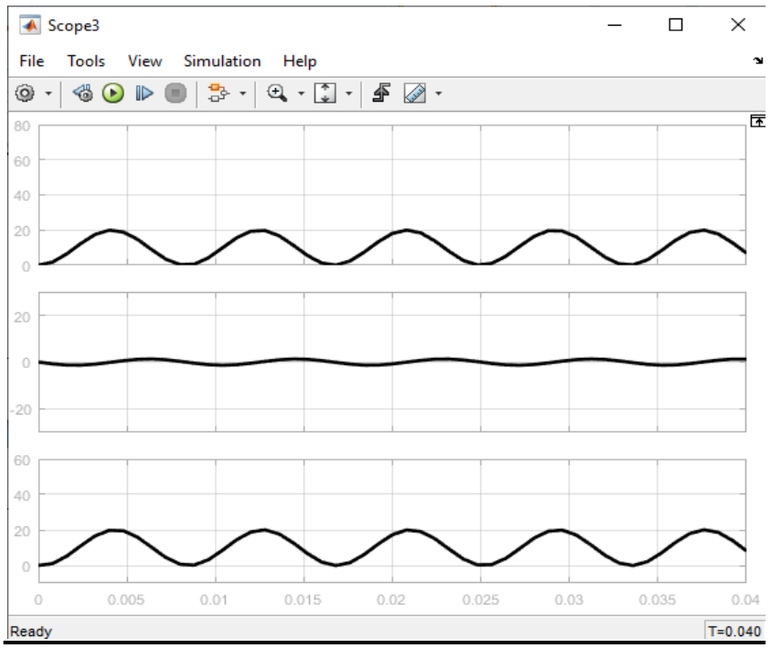


**Figure 1.14 output powers signal**

**Theoretical:**

2018- EE- 394 Hamza Mobeen

$R = 500\Omega$ , $L = 10H$, $I = 0.1428A$, $V = 70.77V$

Power factor $= \cos\theta = 0.9914$.

Real Power $= P = VI\cos\theta = 10.019W$.

Reactive Power $= Q = VI\sin\theta = 1.3225Var$.

Apparent power $= S = \sqrt{P^2+Q^2} = 10.1059 0VA$.

**Figure 1.15 calculations of all power**

**Task 3:Inductance:**

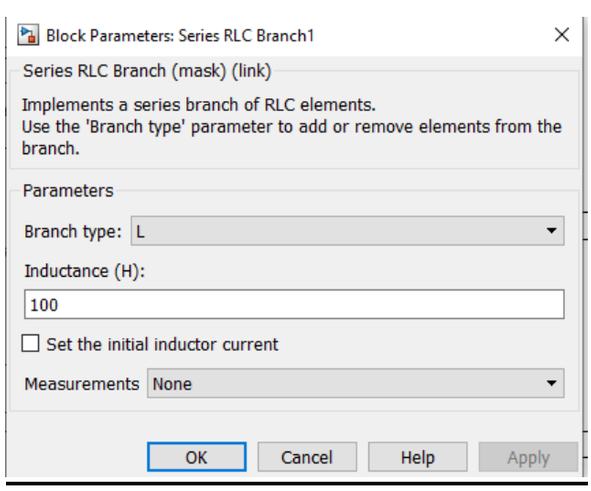


**Figure 1.16 inductance value**

**Resistance:**

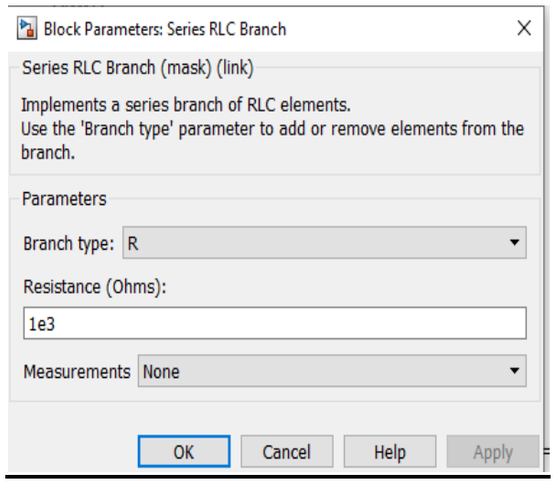


**Figure 1.17 resistance value**

**Output schematics:**

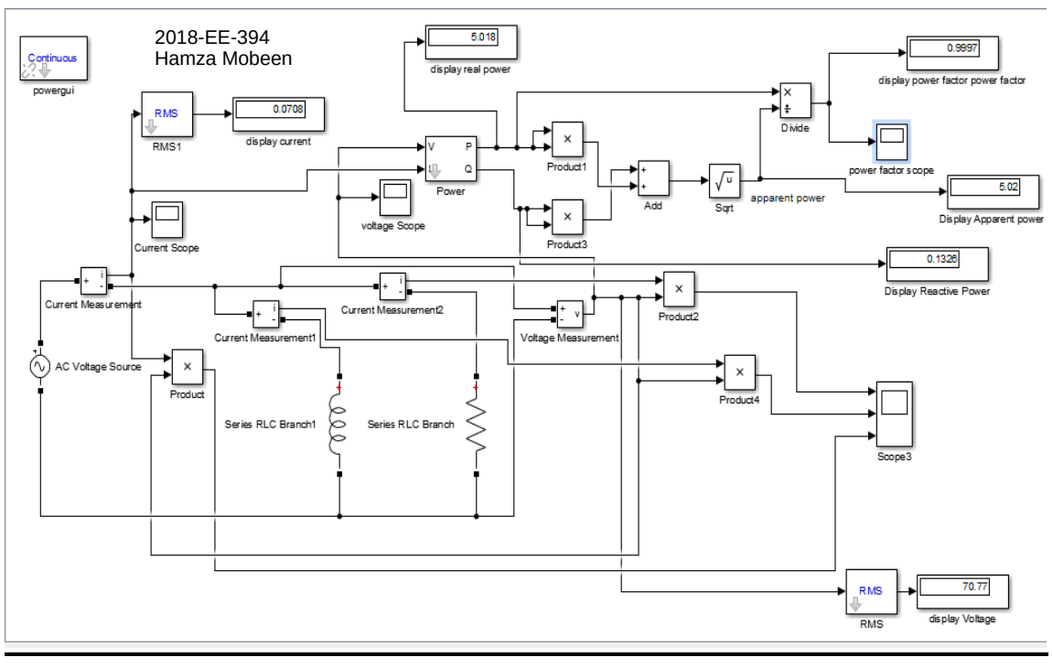


**Figure 1.18 output value on schematic**

**Output powers:**

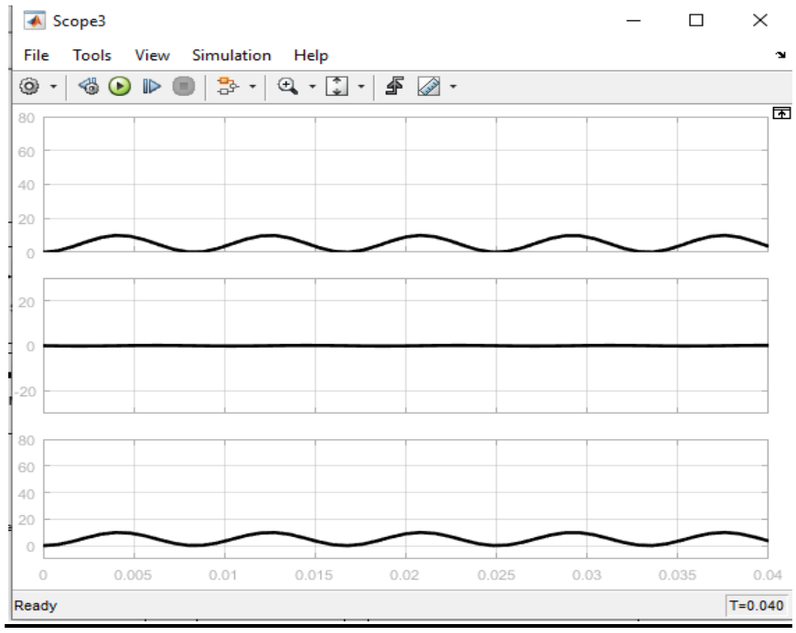


**Figure 1.19 output signal of all power**

**Power factor scope:**

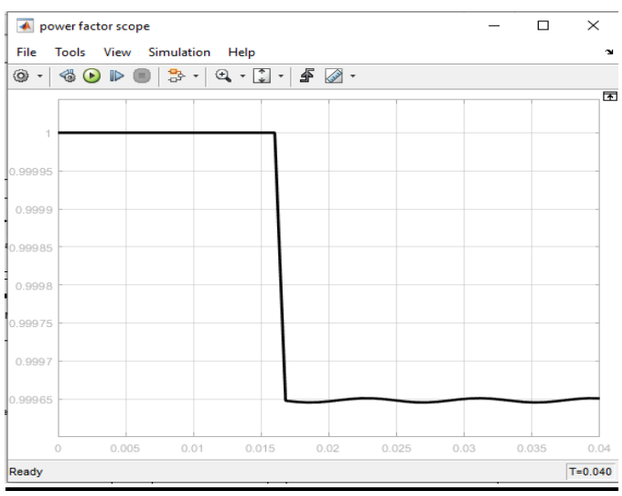


**Figure 1.20 power factor signal**

**Theoretical:**

2018-EE-394 Hamza Mobeen

$R = 100\Omega$, $L = 2H$, $I = 0.7142$, $V = 70.79V$

Powerfactor $= \cos\theta = 0.9914$.

Real Power $= P = VI\cos\theta = 50.1234W$.

Reactive Power $= Q = VI\sin\theta = 6.61637Var$

Apparent Power $= S = \sqrt{P^2+Q^2} = 50.55819VA$.

**Figure 1.21 calculations for powers**

**Conclusion:**

| Resistor | Inductor | Current | Power factor | Voltage | Real power | Reactive Power | Apparent power |
|---|---|---|---|---|---|---|---|
| 200 | 1 | 0.4007 | 0.8847 | 70.82 | 25.1056 | 13.2285 | 28.3775 |
| 500 | 10 | 0.1428 | 0.9914 | 70.77 | 10.019 | 1.3225 | 10.105 |
| 1e3 | 100 | 0.0708 | 0.9997 | 70.77 | 5 | 0.122 | 5.00148 |

- When we increase the impedance of the ac supply system the value of current flow decrease from the transmission line and there is no major effect on voltage of transmission line
- Current flow decrease from the system there will be less losses in system transmission
- Current effect the reactive power of system directly if there is more flow of current losses increase and to compensate the reactive power increase
- If we want to decrease the reactive power of the system just increase the impedance through which current flow decrease and power factor of system increases and then as result reactive power decrease.
- Apparent power will depend on the real power totally if there is less reactive power

2. What does $Q = VI \sin \theta$ signify?

It represents the reactive power of the system it use to maintain the voltage level in system When there is not enough **reactive power**, the voltage sags down and it is not possible to push the **power** demanded by loads through the lines

**Conclusion:**

In this lab, we learnt how to measure instantaneous power across an RL parallel load. We learned how to utilize a multiplexer. By connecting capacitors, we learned about power factor enhancement. Power factor adjustment is the process of connecting a capacitor in parallel with an inductive load. The capacitor has the effect of increasing the power factor of the source that supplies electricity to the load. In addition, the perceived strength of the source diminishes. The source current drops as well. When the line impedance between the source and the load is taken into account, the decrease in source current results in fewer line losses and voltage drops. Improved efficiency and voltage regulation are the ultimate results of power factor correction.

| | |
|---|---|
| **Name** | **Hamza Mobeen** |
| **Reg. #** | **2018-EE-394** |
| **Date** | **04/14/2021** |
| **Marks** | |

# EXPERIMENT # 2

**Analysis of a single-phase power system using Simpower Systems blockset of Matlab/Simulink.**

## Objectives:

To learn/ visualize some of the basic concepts related to power flow in AC circuits.

## Lab Tasks:

Simulate an RL circuit in MATLAB by joining a resistive branch in parallel with an inductive branch. Attach voltage source to the RL branch. Perform the following tasks:

4. Display instantaneous load power (RL load) on scope.
5. Display instantaneous voltage after each transformer.
6. Display harmonic analysis of Input current with inductive load.
7. Display harmonic analysis of input current with non-linear load.

## Theory:

Electrical power is the rate of consumption of electrical energy. The unit of power is Watt. The power in Watts being absorbed by a load at any instant is the product of instantaneous voltage drop across it in volts and instantaneous current into it in amperes. For a load with terminals 'a' and 'n'; having terminal voltage and current given as:

$$v_{an} = V_{\max} \cos (wt)$$

and

$$i_{an} = I_{\max} \cos (wt - \theta)$$

the instantaneous power is

$$p = v_{an}\, i_{an} = V_{\max}\, I_{\max} \cos (wt) \cos (wt - \theta)$$

The angle θ is positive for lagging current and negative for leading current. A positive value of p expresses the rate at which energy is being absorbed by the part of the system between the points *a* and *n*. The instantaneous power is obviously positive when both $v_{an}$ and $i_{an}$ are opposite in sign. Positive power results when current is flowing in the direction of voltage drop and is the rate of transfer of energy to the load. Conversely, negative power results when current is flowing in the direction of voltage rise and means energy is being transferred from the load into the system to which the load is connected. If $v_{an}$ and $i_{an}$ are in phase, as they are in a purely resistive load, the instantaneous power will never become negative. If the current and voltage are out of phase by 90°, as in a purely inductive or purely capacitive ideal circuit element, the instantaneous power will have equal positive and negative half cycles and its average value will always be zero.

## A. With Linear Load the Harmonic Analysis

**Diagram: (Attach snapshot of your Simulink figure with meters and scope)**

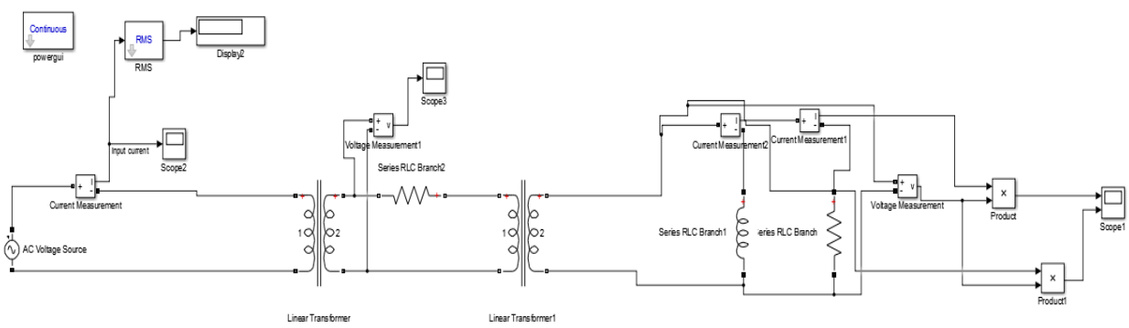


Figure 1: Single phase system with inductive load

Attach result of scopes taken from

i. Voltage of transformer 1
ii. Voltage of transformer 2
iii. Output power
iv. Harmonic analysis of Input current

## Schematic:

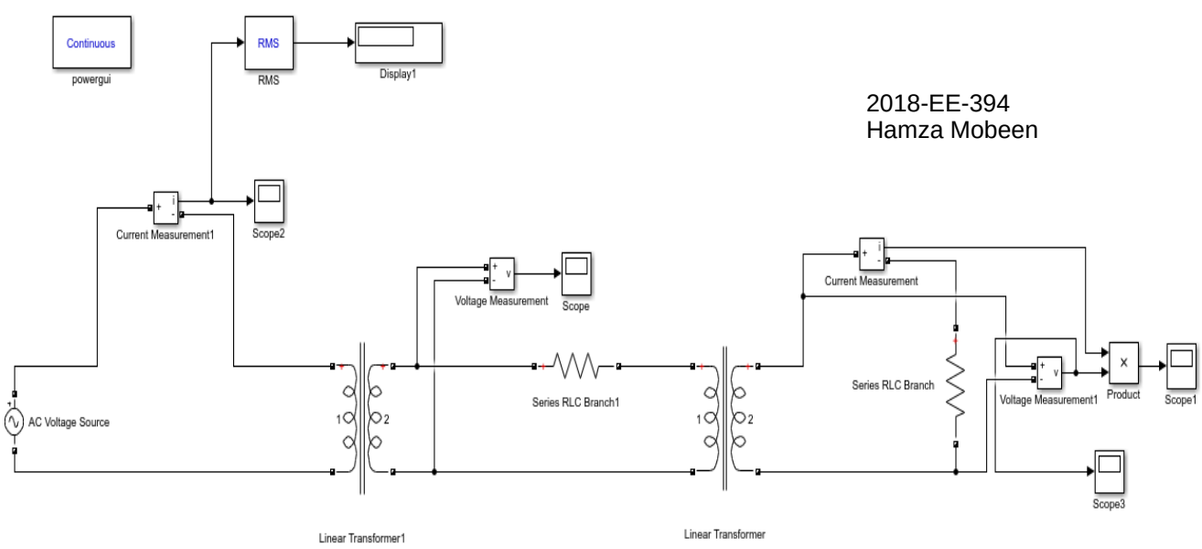


**Figure 2.1 Schematic**

## Input current:

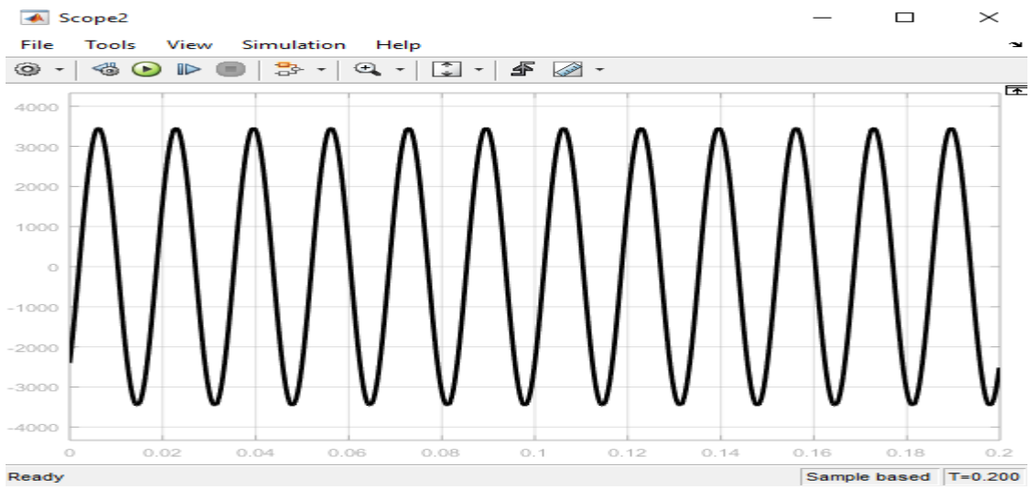


**Figure 2.2 input current signal**

## FFT Analysis and THD

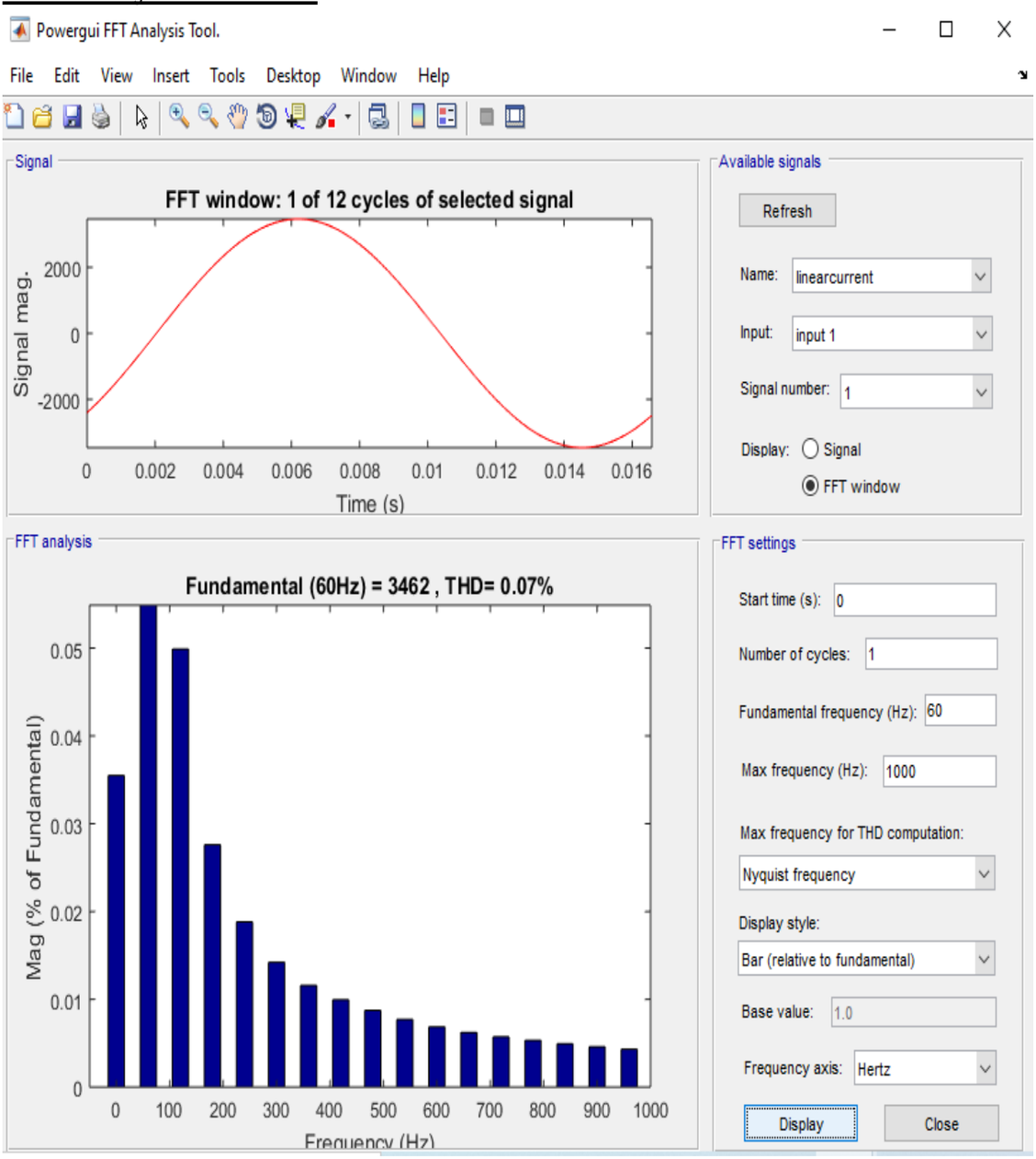


**Figure 2.3 THD and FFT analysis**

## Voltage scope transformer 1:

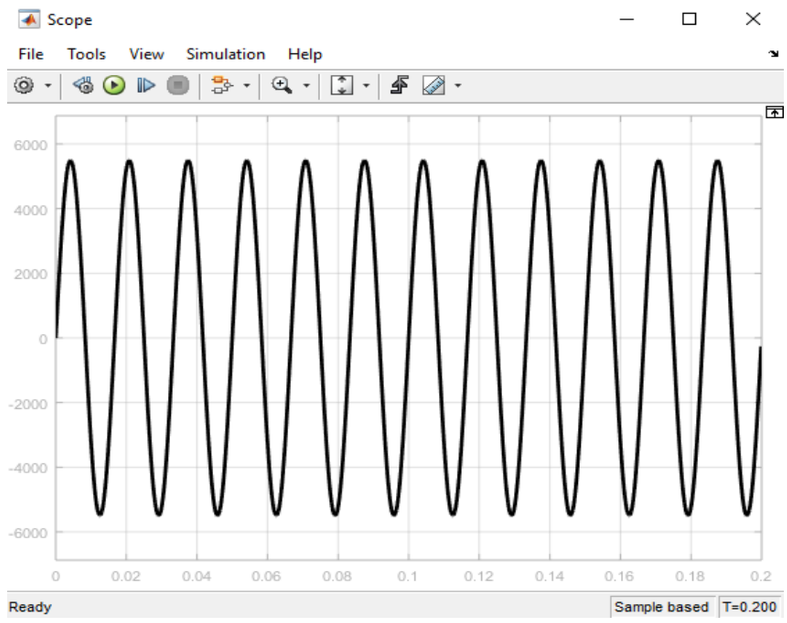


**Figure 2.4 voltage signal of transformer 1**

## Voltage scope transformer 2:

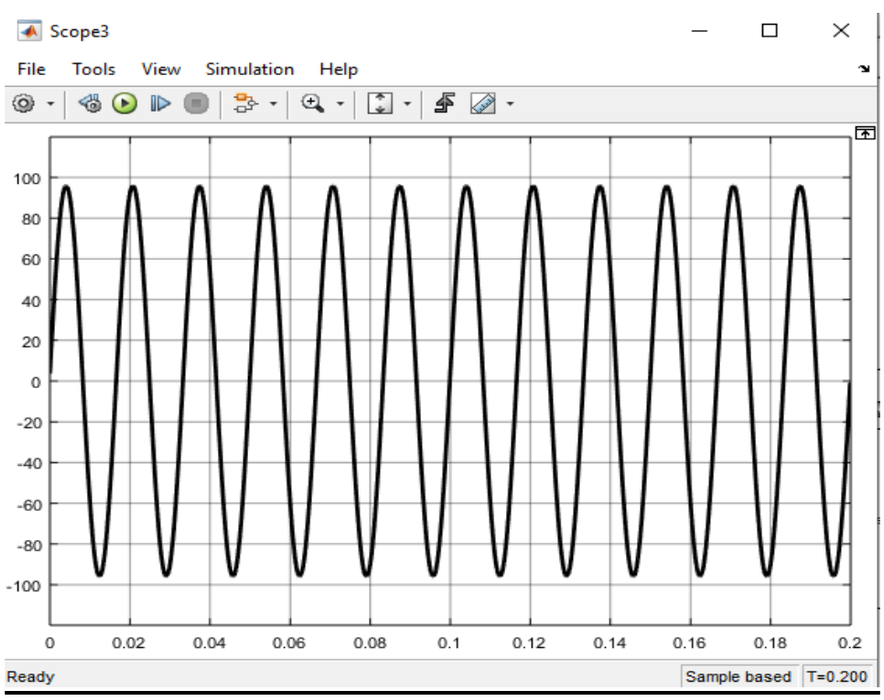


**Figure 2.4.1 voltage signal of transformer 1**

**Instantaneous power scope:**

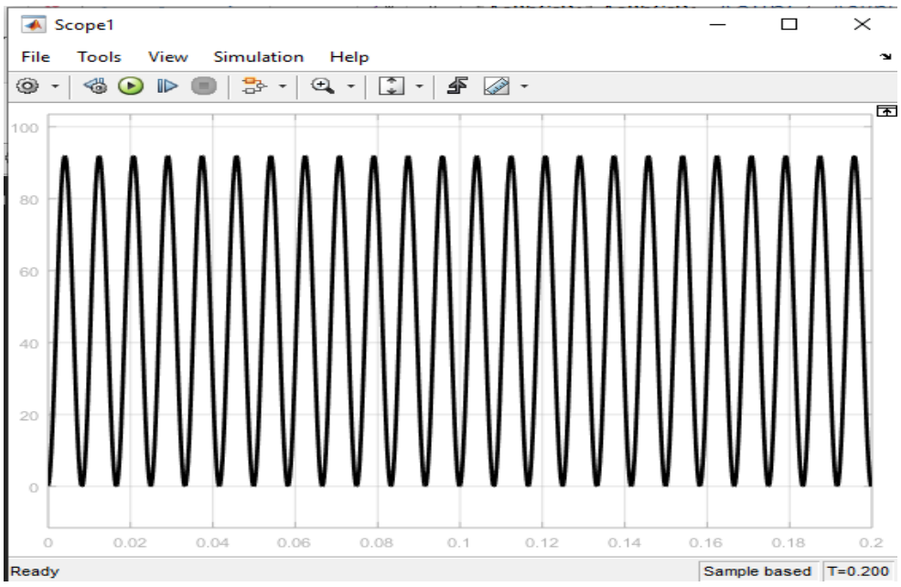


**Figure 2.5 instantaneous power signal**

## B. With Non-linear Load

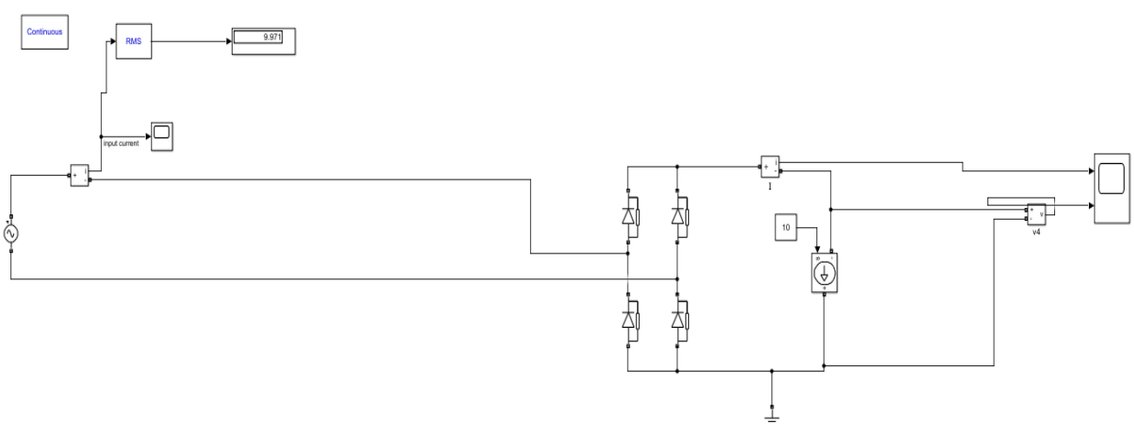


Figure 2: Observation of single-phase system with non-linear load

Attach result of scopes taken from

i. Output voltage of rectifier
ii. Output power
iii. Harmonics analysis of input current

## Schematic:

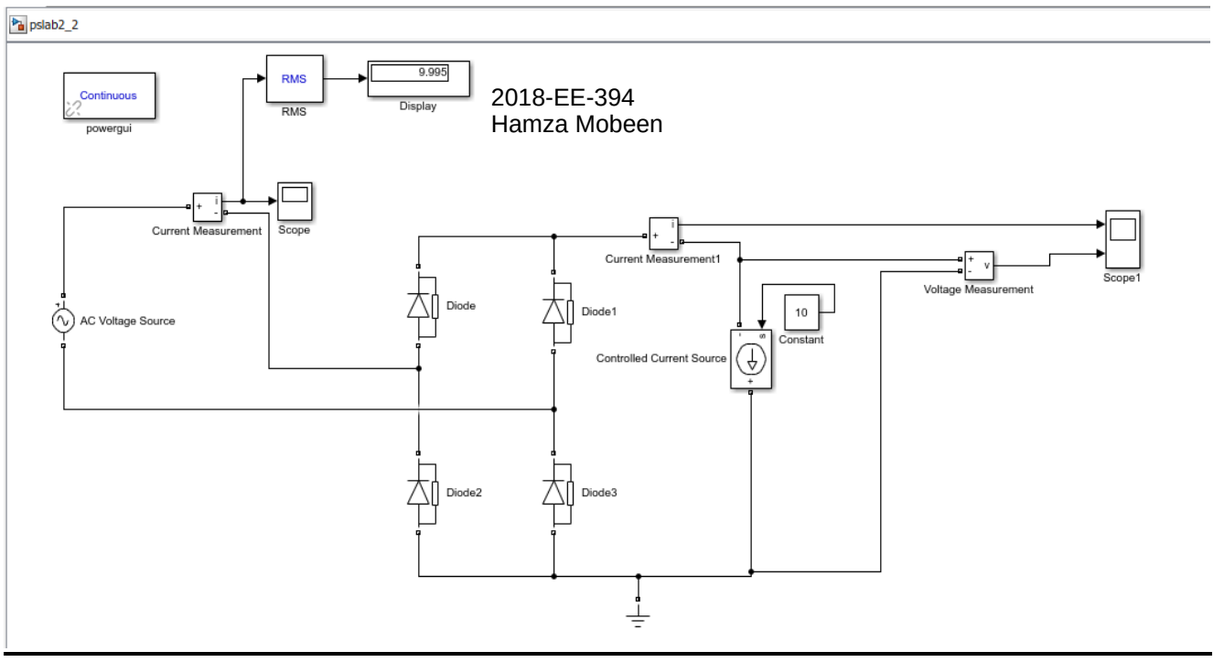


**Figure 2.6 schematic**

## Input current scope:

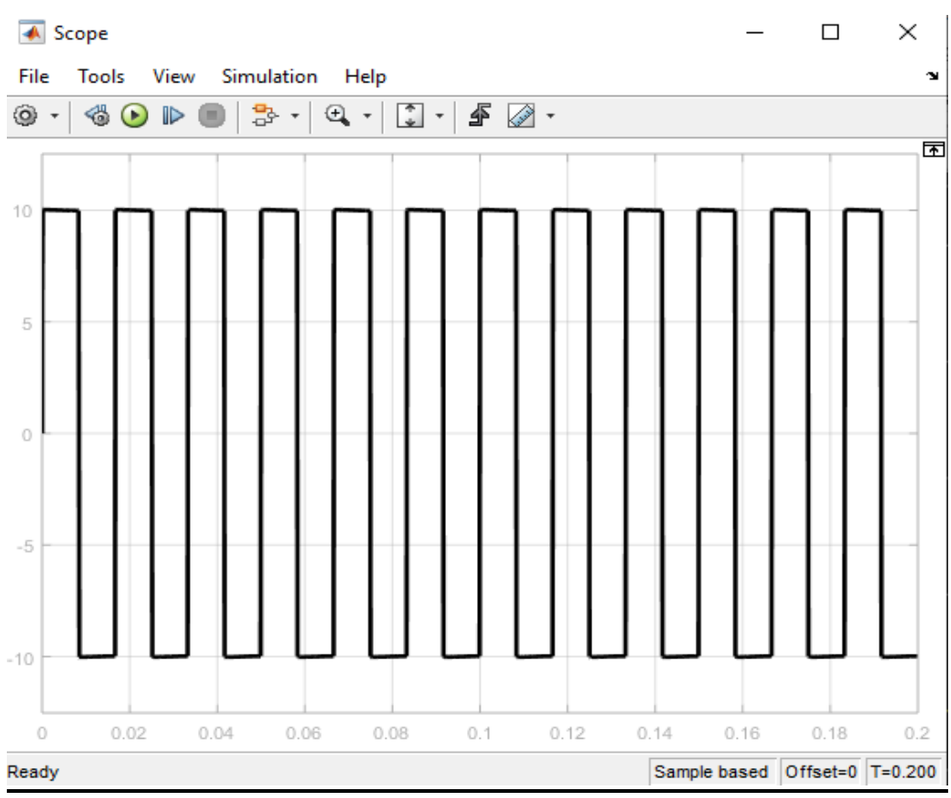


**Figure 2.7 input current signal**

## Output Current and Voltage source:

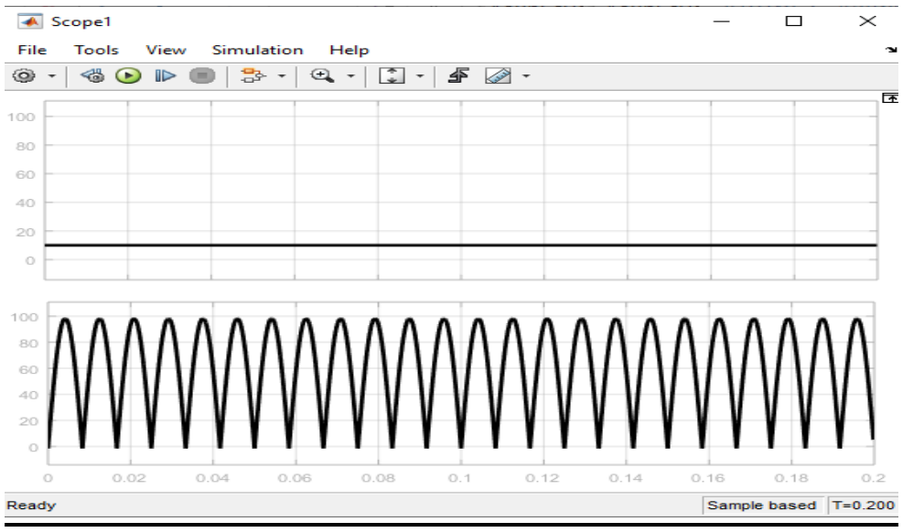


**Figure 2.8 output current and voltage source**

## FFT Analysis:

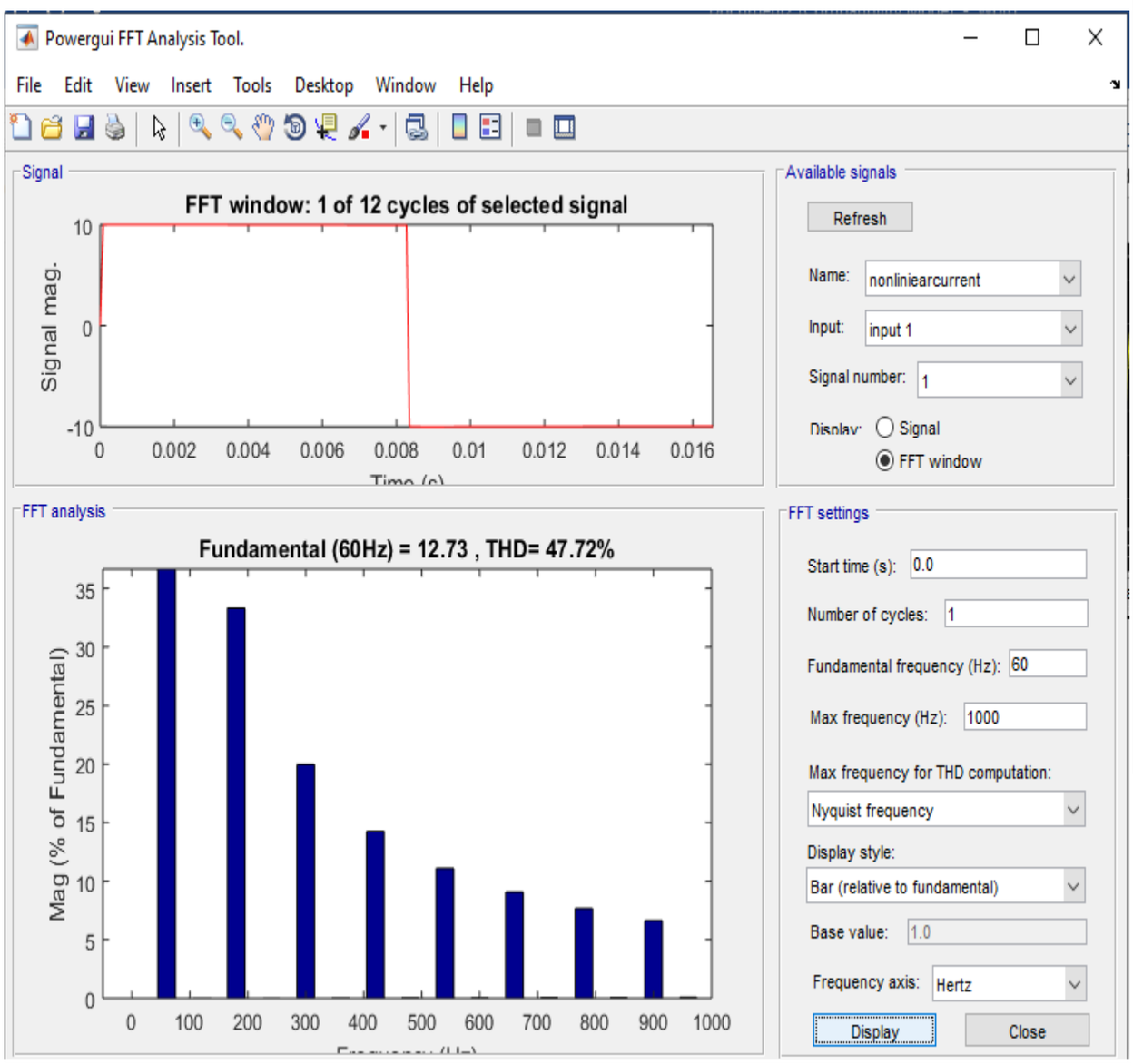


**Figure 2.9 FFT analysis and THD**

## Conclusion:

In this lab, We learnt how to understand some of the fundamental principles linked to power flow in alternating current circuits in this experiment. Because of the resistor value, we noted that the total harmonic distortion of the system is 0% in the first job. The lesser the resistor value, the less distortion there will be. The distortion rises when the resistor value is increased. In the second assignment, we discovered that the harmonic distortion of the system is significantly higher due to the diodes.

| | |
|---|---|
| **Name** | **Hamza Mobeen** |
| **Reg. #** | **2018-EE-394** |
| **Date** | **04/21/2021** |
| **Marks** | |

# EXPERIMENT # 3

**Analysis of a Three-Phase Power System by using Simpower System Blockset of Matlab.**

## Objectives:

To learn/ visualize some of the basic concepts related to three phase system.

## Lab Tasks:

Simulate a three-phase circuit in MATLAB by using components and analyze system. Attach voltage source to the three-phase load and Perform the following tasks:

1. Display instantaneous voltage and Current of three phase system at source.
2. Display instantaneous voltage and Current of three phase system at Load.
3. Display the phase difference between voltage and current in Delta-Y connected transformer.

**Note:**
Do not use 'power gui' for phase difference measurement. Rather, use oscilloscope to measure the time difference and then convert this to phase difference.

**Lab Task:**

The figure 1 represent the complete three phase system. All three phase components can be taken from command window using command "Powerlib" or these components can be taken from Simulink Library using Simscape library. Simscape has multiple libraries for power system Simpowersystem is mostly used having all components related to any system.

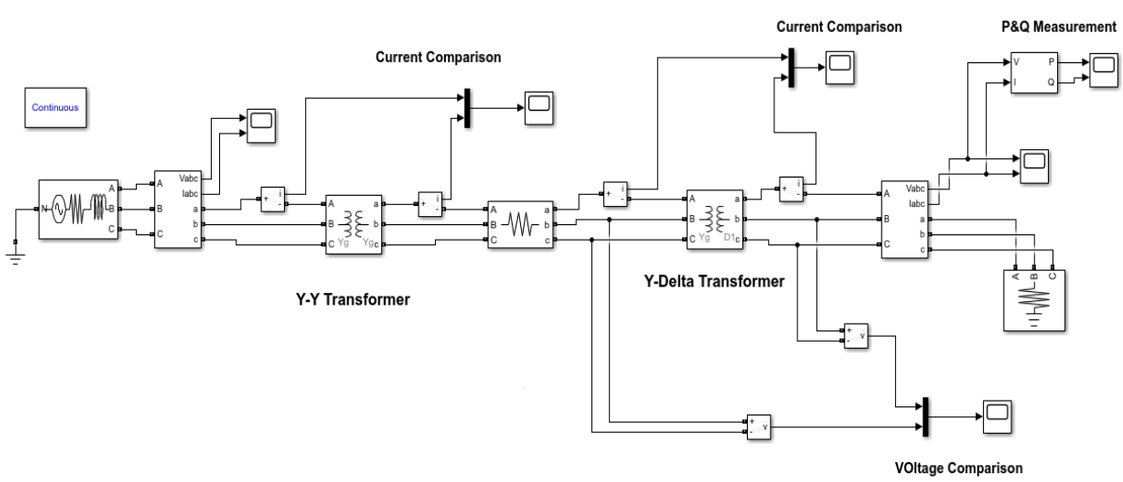


Figure 1. Three phase system in Simulink

## Observations and results:

## Task 1:

Represents the voltage, Current, Power and Reactive power both at source side and at load side.

## Simulation:

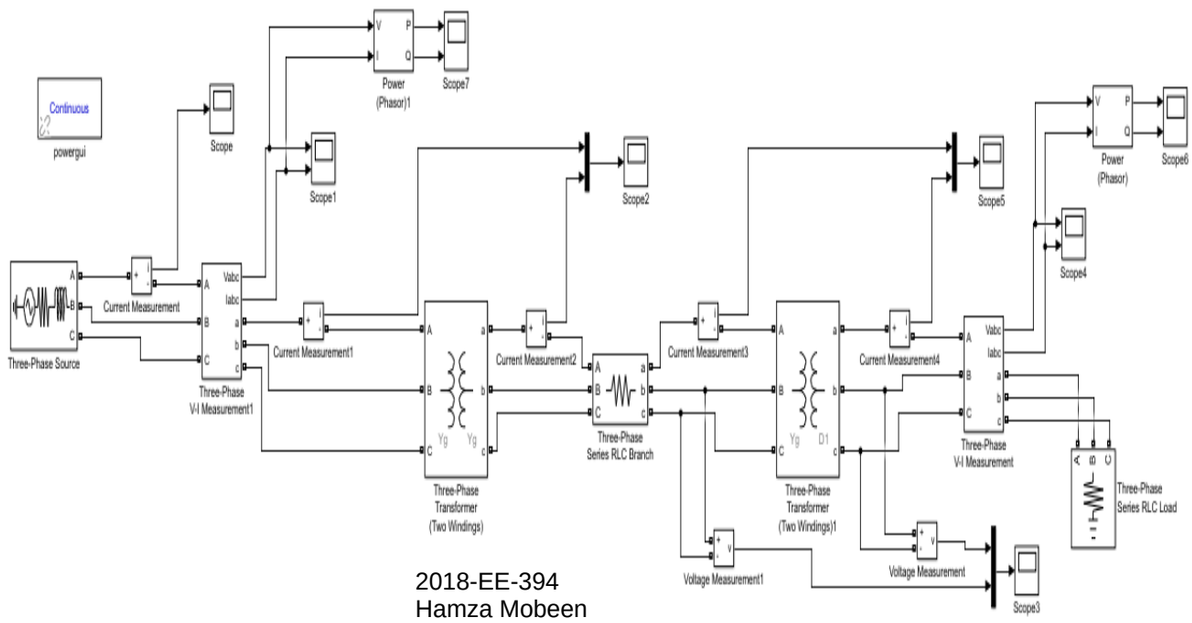


**Figure 3.1 simulation of three phase power system**

## Voltage And Current Waveform source side:

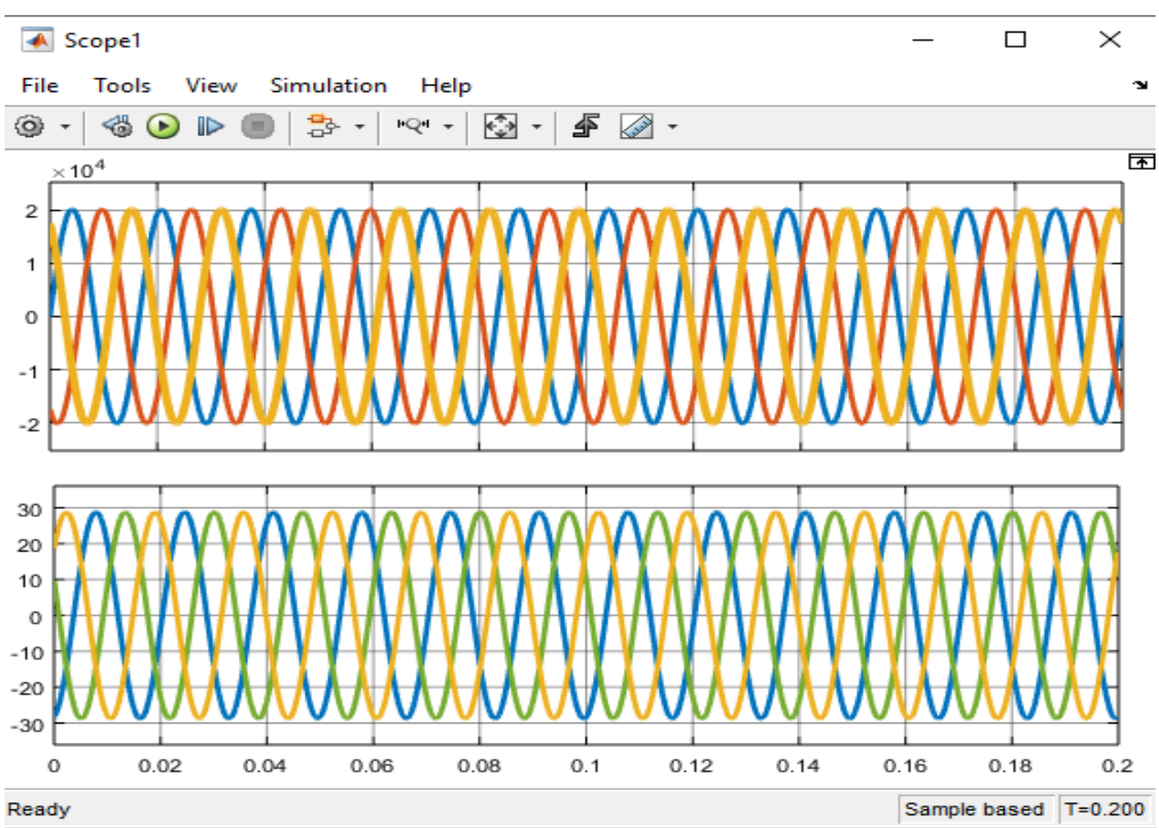


**Figure 3.2 voltage and current scope of source side**

## Voltage And Current Waveform load side:

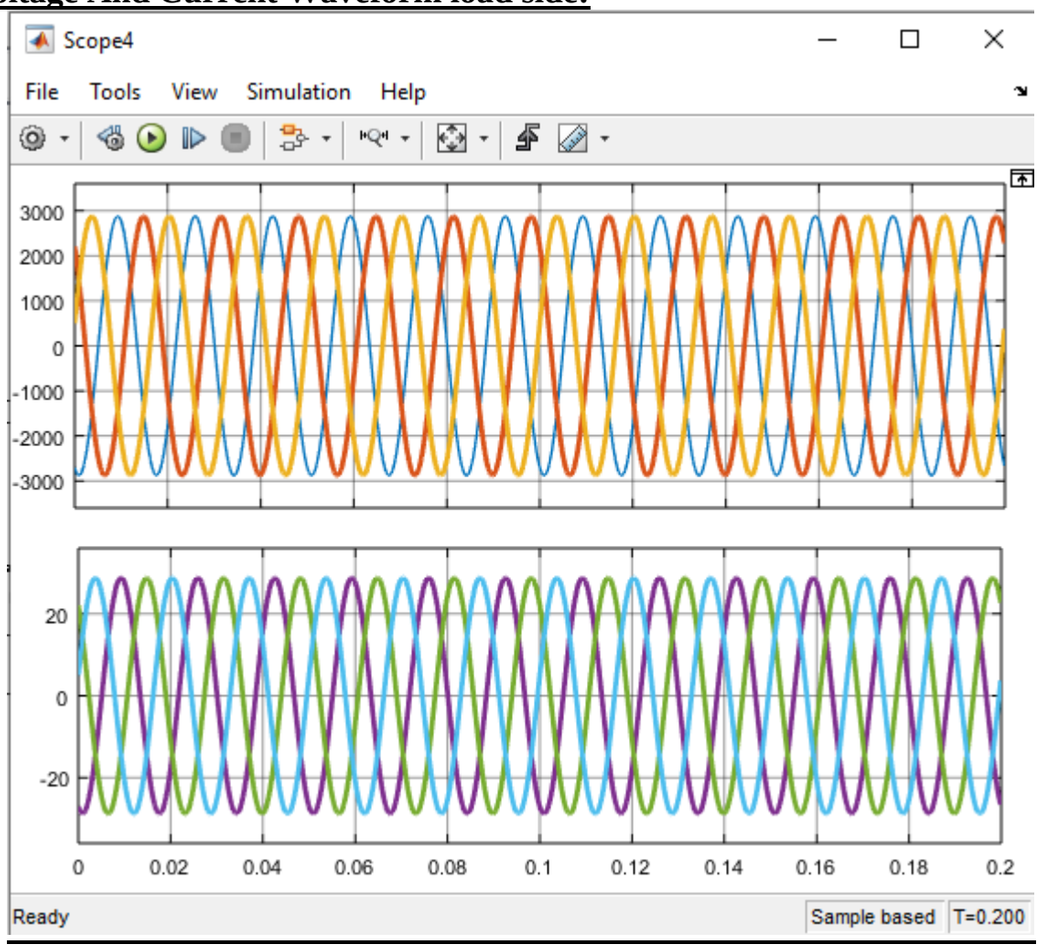


**Figure 3.3 voltage and current scope of load side**

## Current at y-y transformer

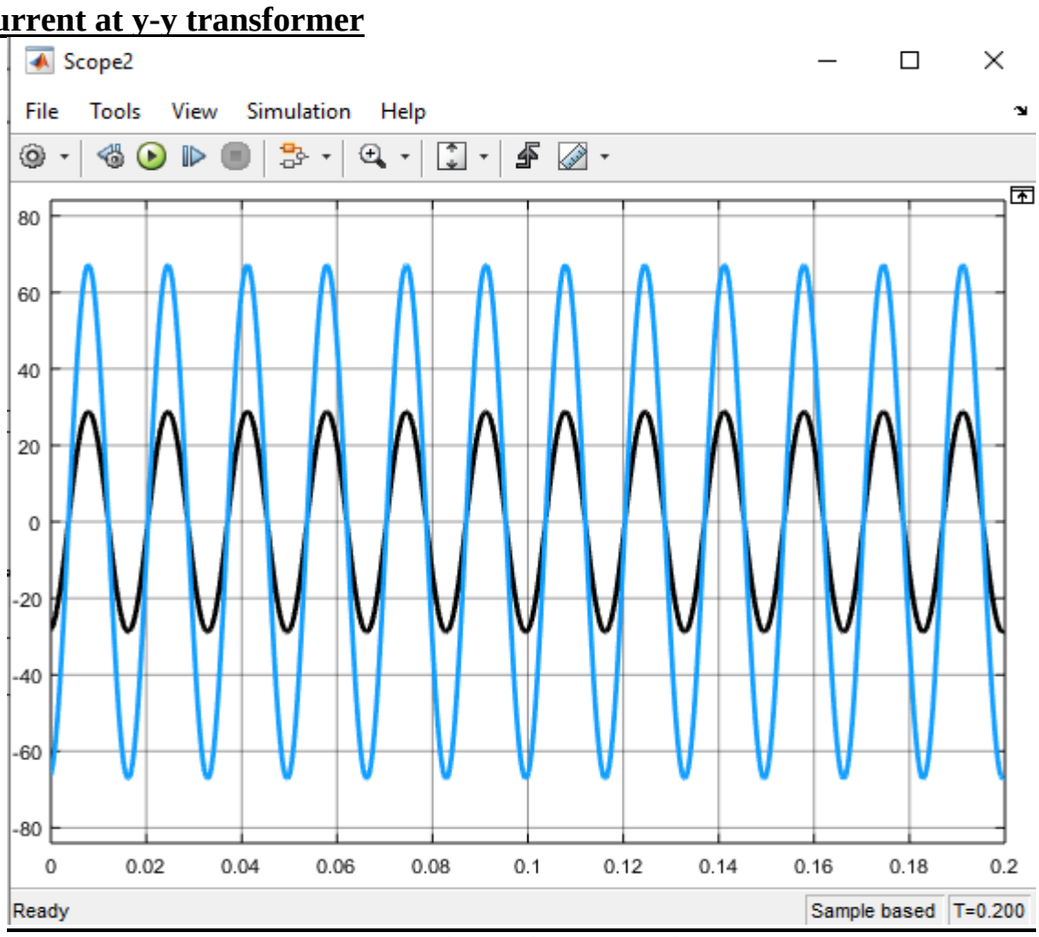


**Figure 3.4 current waveform of Y-Y transformer source side**

## Current of Y-Delta Transformer:

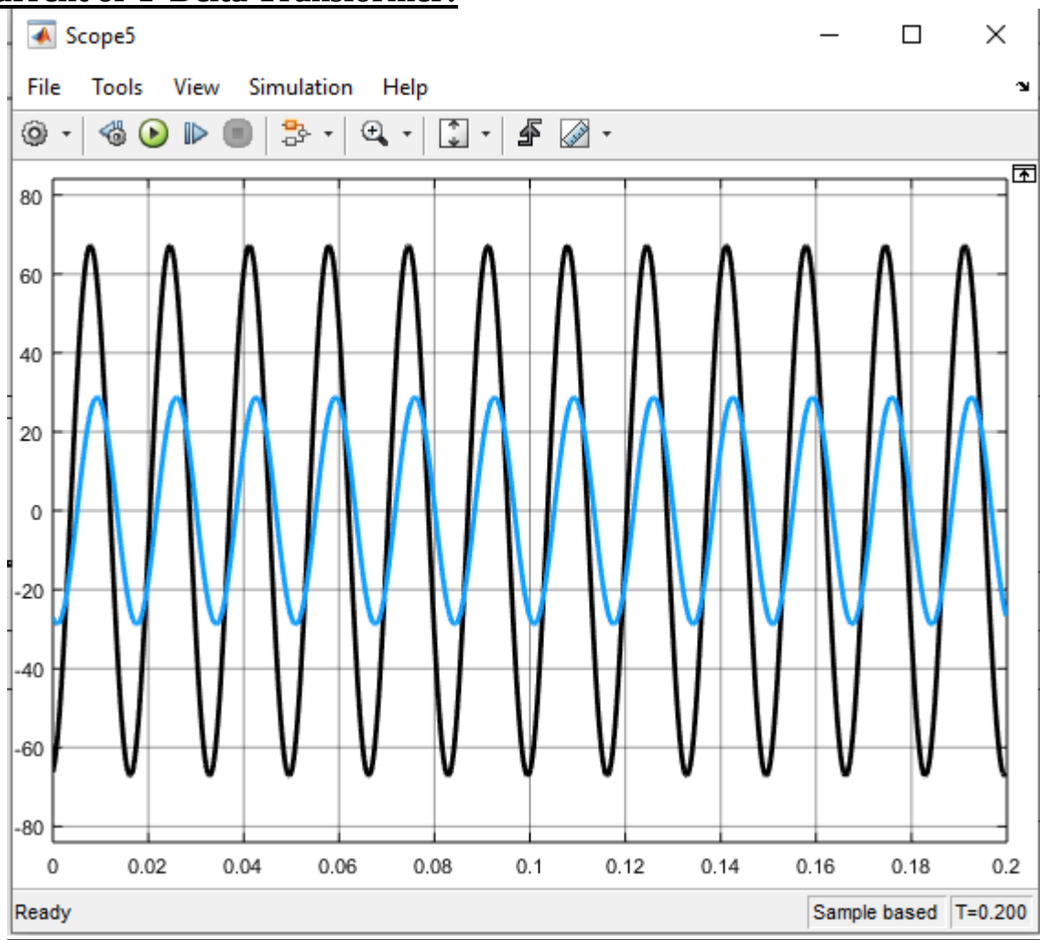


**Figure 3.5 current waveform of Y-delta transformer at load side**

## Voltage of transformer Y-Delta:

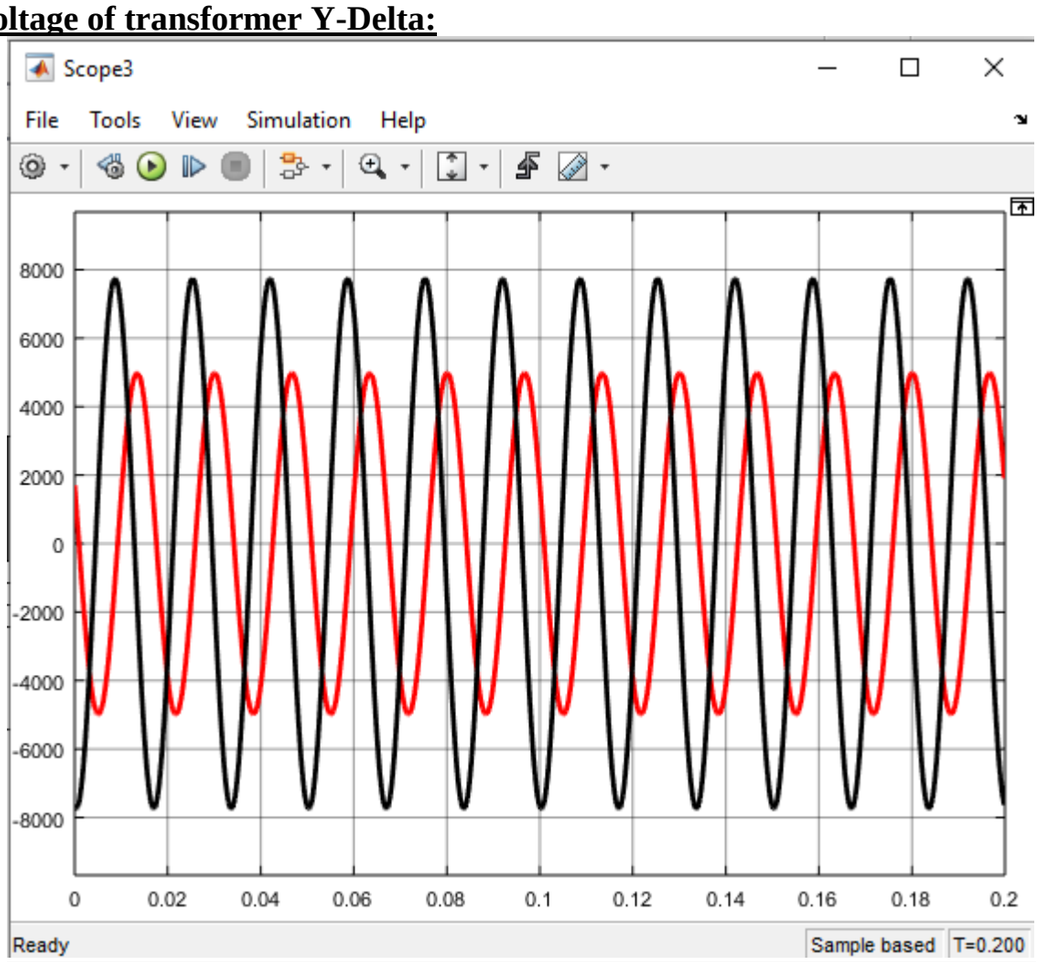


**Figure 3.6 voltage waveform of Y-Delta transformer at load side**

**Active and Reactive power at source side:**

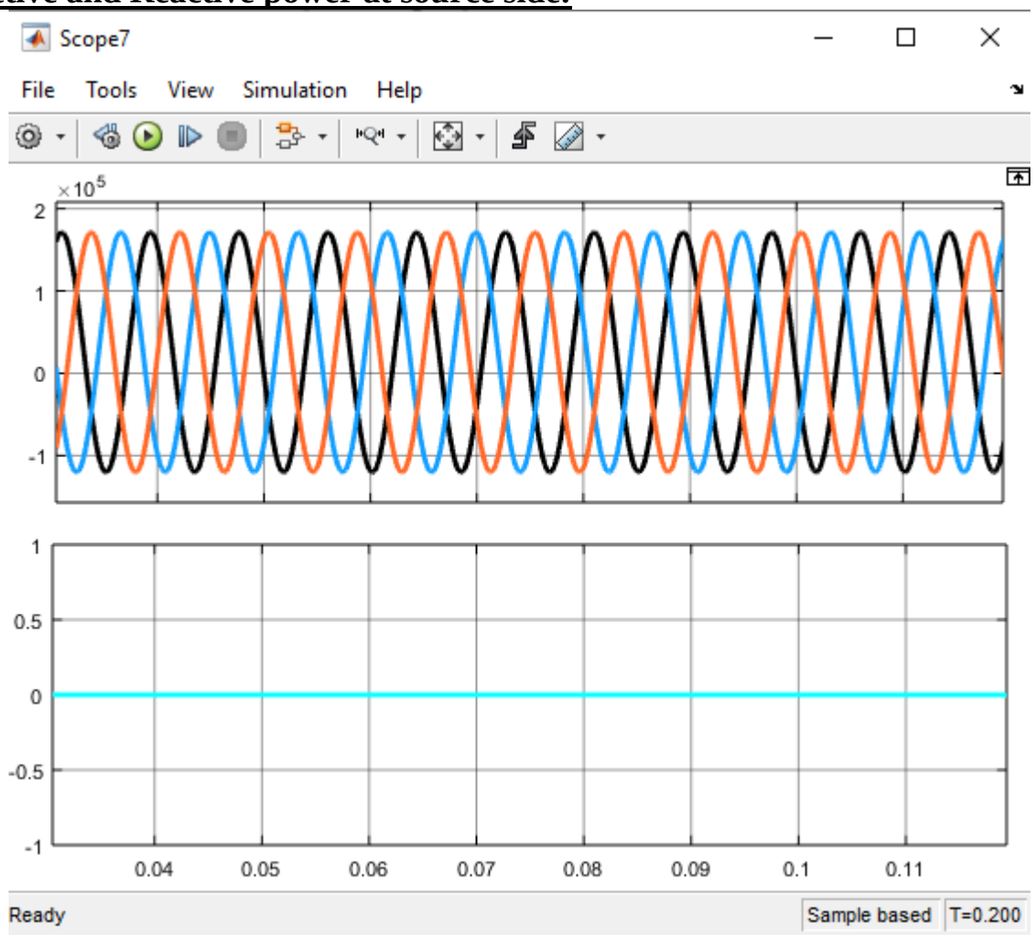


**Figure 3.7 active and reactive power at source side**

**Active and reactive power at load side:**

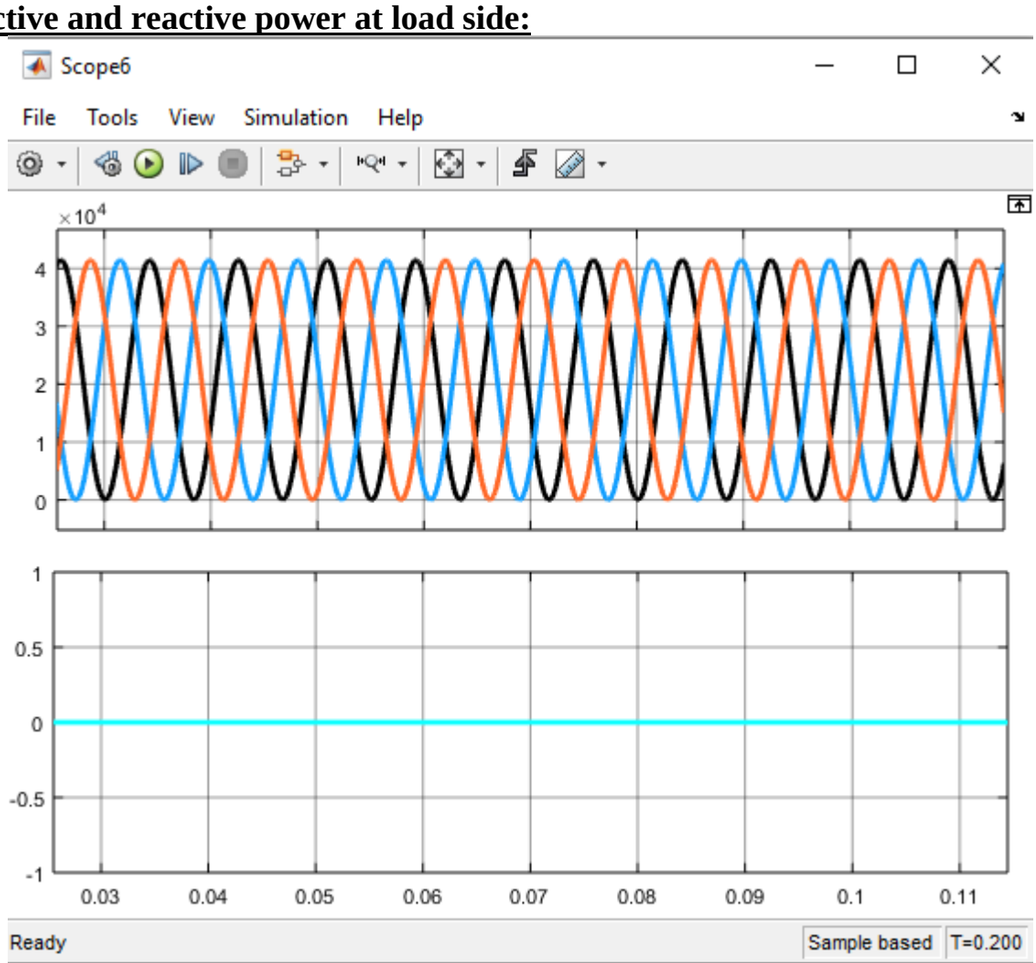


**Figure 3.8 Active and Reactive Power at load side**

## Harmonic analysis:

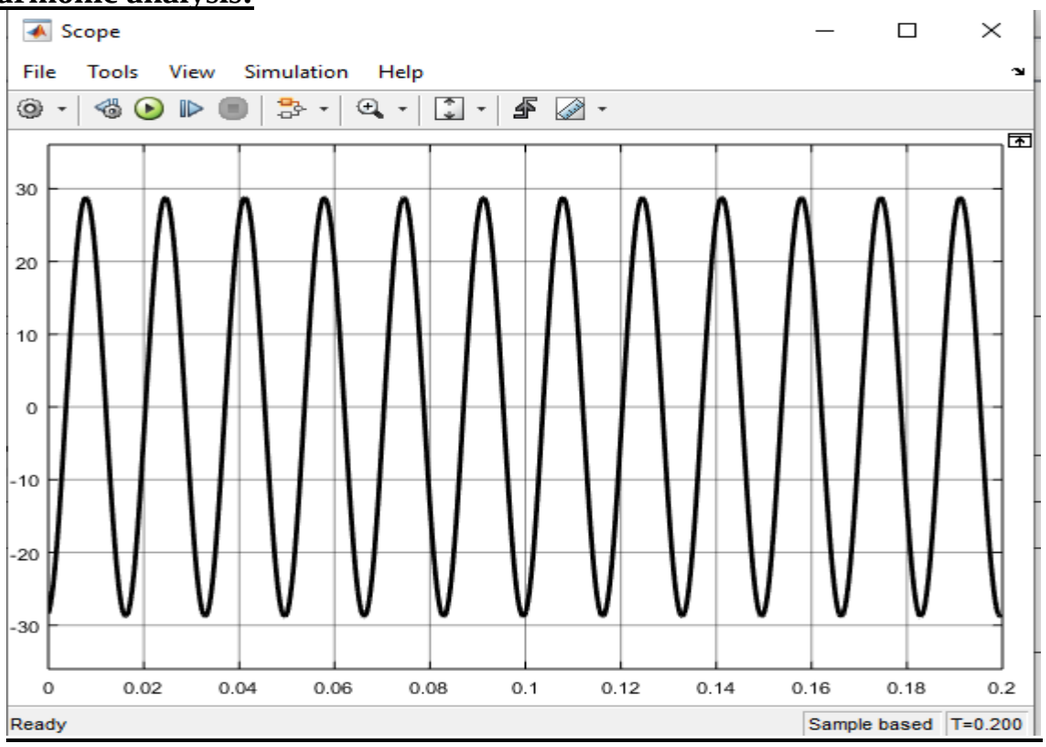


**Figure 3.9 harmonic analysis of circuit**

**Exercise:**

**Harmonic analysis for resistive load, inductive load and non-linear load.**

## Harmonic analysis inductive load:

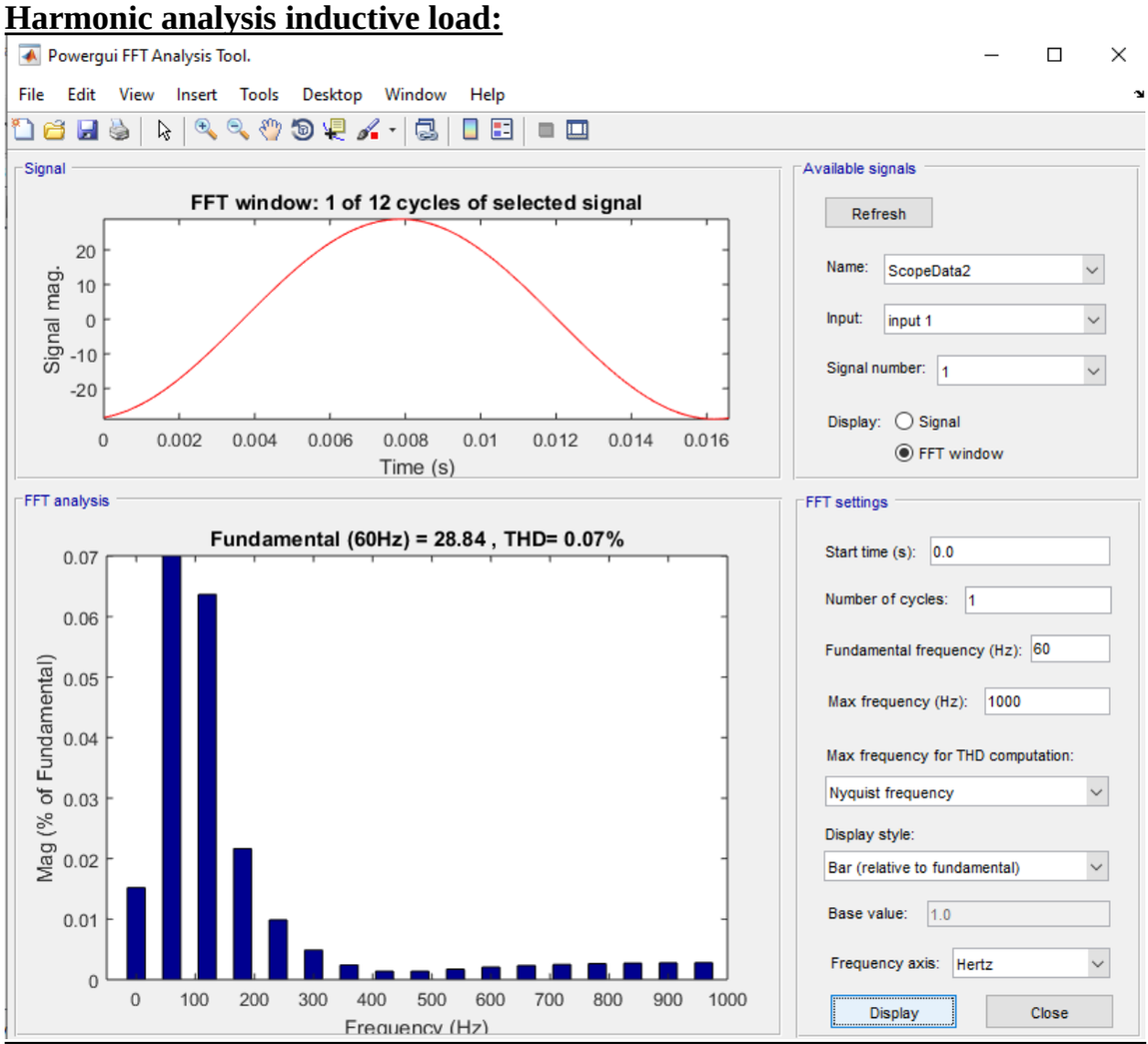


**Figure 3.10 inductive load FFT harmonic analysis**

## Harmonic analysis resistive load:

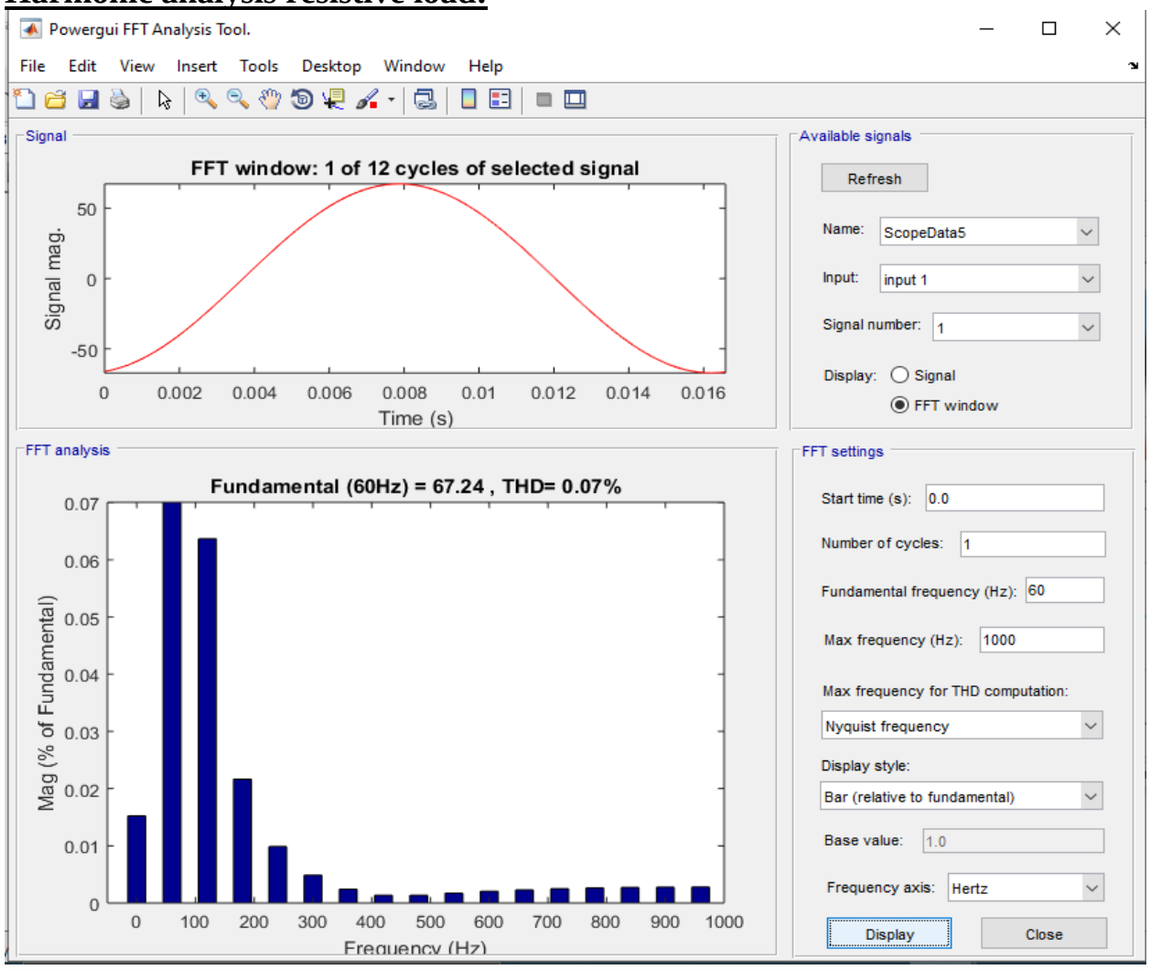


**Figure 3.11 resistive load analysis**

## Harmonic analysis of nonlinear load:

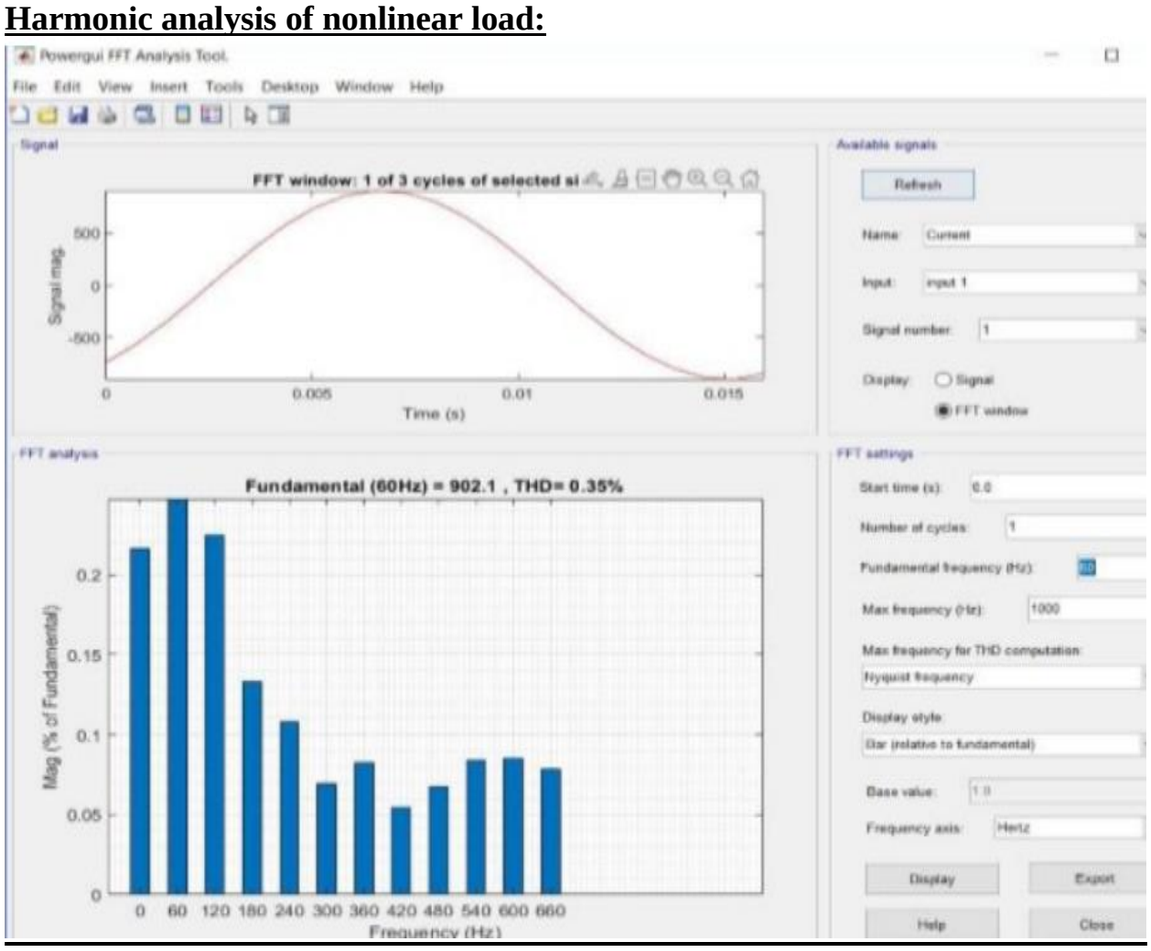


**3.12 harmonic analysis of nonlinear load**

**Task 2:**

Connect the system in Delta and Y connection and take analysis from results of leading and lagging of voltages and current.

**Y connection Simulink:**

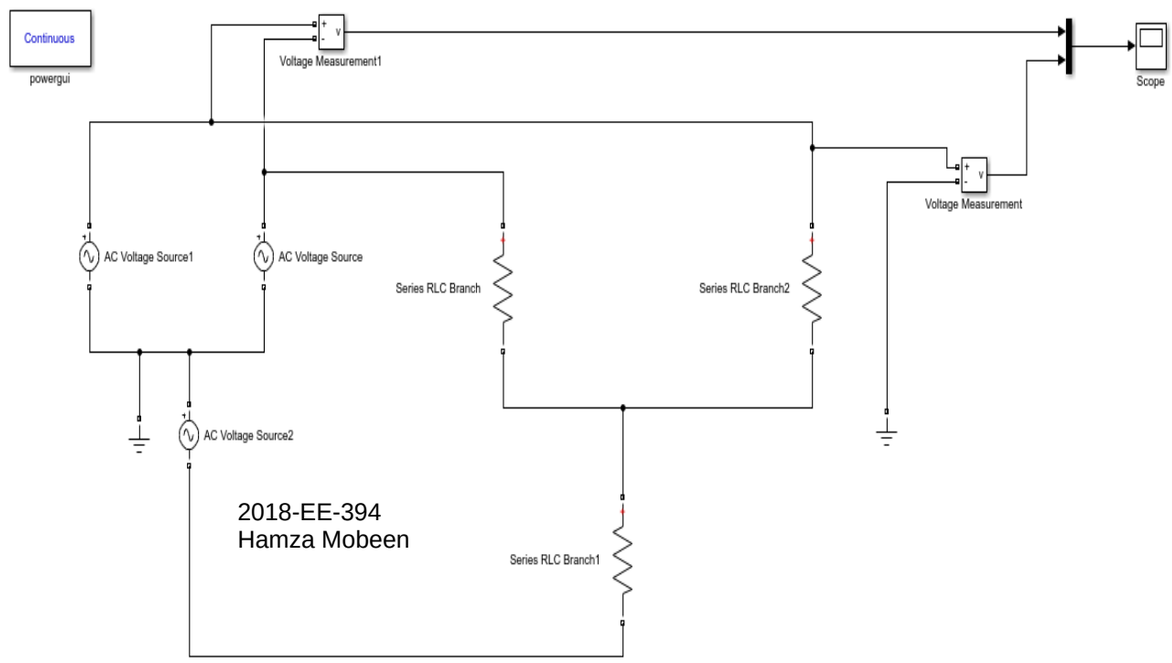


**Figure 3.13 Y connection of three phase**

| Instantaneous $V_a$ and $V_{ab}$ | Observations / Comments |
|---|---|
| 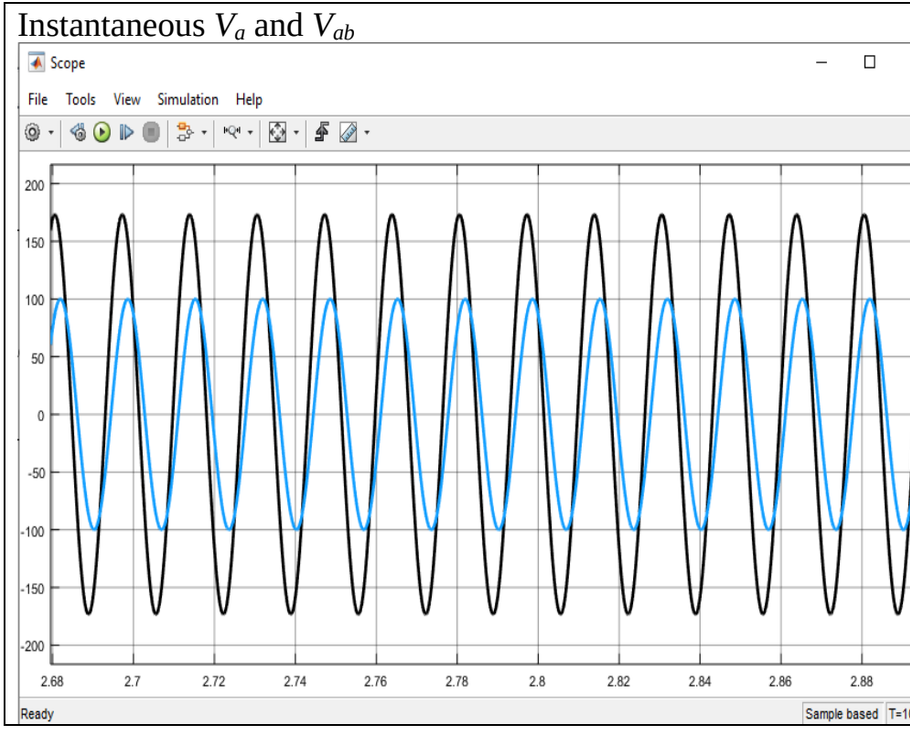 | The line voltage exceed the phase voltage by (3)^1/2<br><br>And line current and phase current are equal |

## Delta Connection

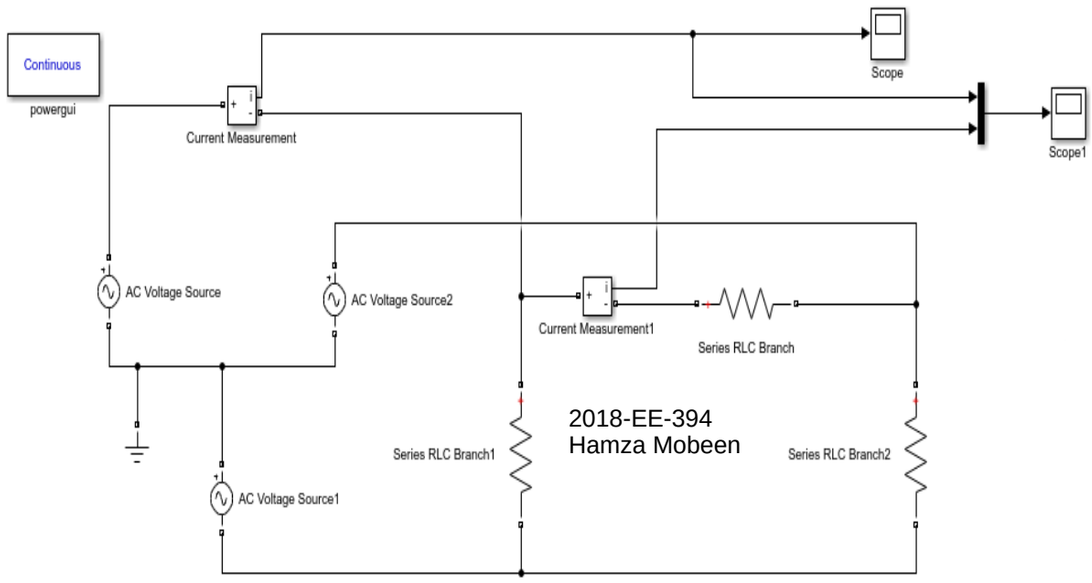


**Figure 3.14 delta connection of system**

| Instantaneous $I_a$ and $I_{ab}$ | Observations / Comments |
|---|---|
| 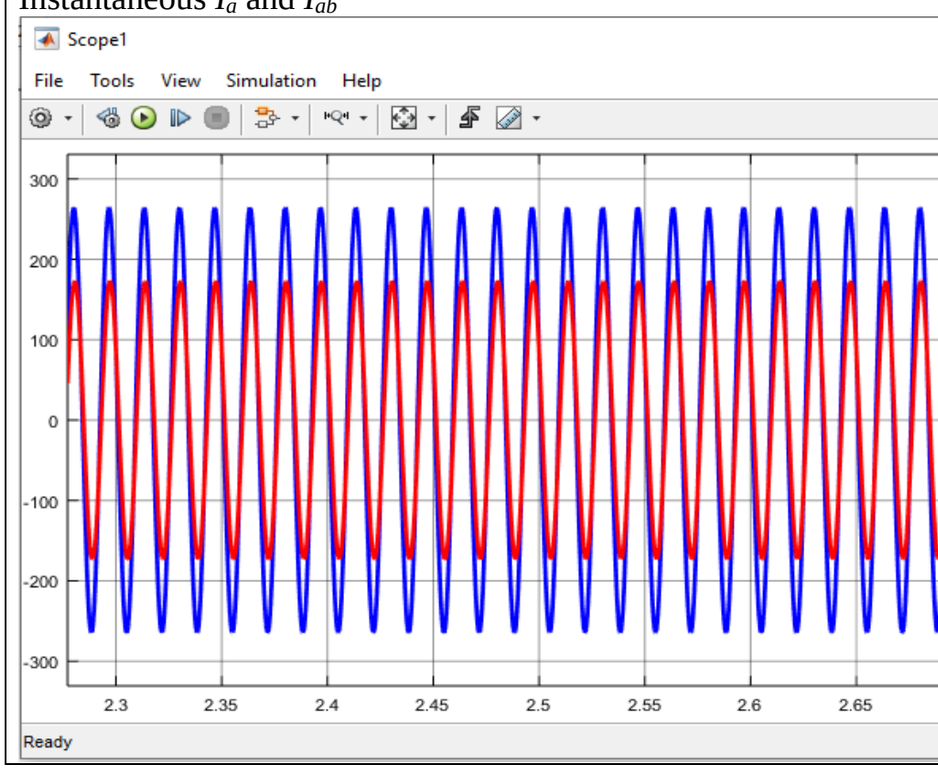 | In delta connection line and phase voltage and equal and current line is (3)^1/2 times greater than phase current |



## Conclusion:

In this lab, we used MATLAB to simulate a three-phase circuit. Connected a voltage source to a three-phase load and carried out several activities. At the source, we presented the instantaneous voltage and current of a three-phase system. We also measured the instantaneous voltage and current of a three-phase system while it was loaded. We connected phases using delta and Y connections. The line current and phase current in delta are different, but the voltages are the same, whereas in Y the line and phase voltages are different, but the current is the same.

| | |
|---|---|
| **Name** | **Hamza Mobeen** |
| **Reg. #** | **2018-EE-394** |
| **Date** | **04/28/2021** |
| **Marks** | |

# EXPERIMENT # 4

## Analysis of a Three-Phase Power System (Y-Y and Y-Delta) in MATLAB/ Simulink.

## Objectives:

To learn/ visualize some of the basic concepts related to three phase system.

## Lab Tasks:

Simulate a three-phase circuit in MATLAB by using components and analyze system. Attach voltage source to the three-phase load and Perform the following tasks:

1. Simulate circuit 1 in MATLAB for balanced voltages and resistive load. Display instantaneous $V_{an}$ and $V_{ab}$ on a single oscilloscope using multiplexer. Also measure their rms values.
2. Similarly simulate circuit 2 and display Iab and Ia. Also measure their rms values.

**Note:**

Do not use 'power gui' for phase difference measurement. Rather, use oscilloscope to measure the time difference and then convert this to phase difference.

**Lab Task:**

The figure 1 represent the complete three phase system. All three phase system components are taken from Simulink Library. First all three phase generators are taken with phase difference. First of all, these are connected in Y connected and phase difference of Line voltage and phase voltage is measured. The generators and loads are connected in Delta connected and phase and line current difference is to measured.

## Diagram:

Your circuit must be neat and roughly follow the same shape as given under. Use abc phase sequence for voltages.

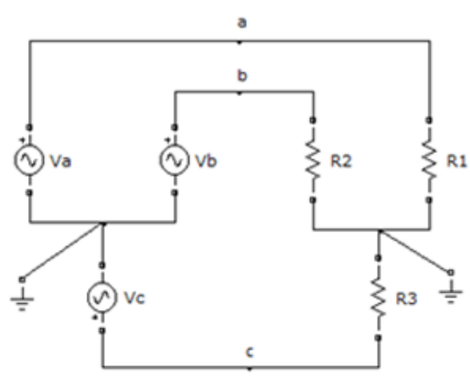


Figure 1: A simple three phase system having source and load

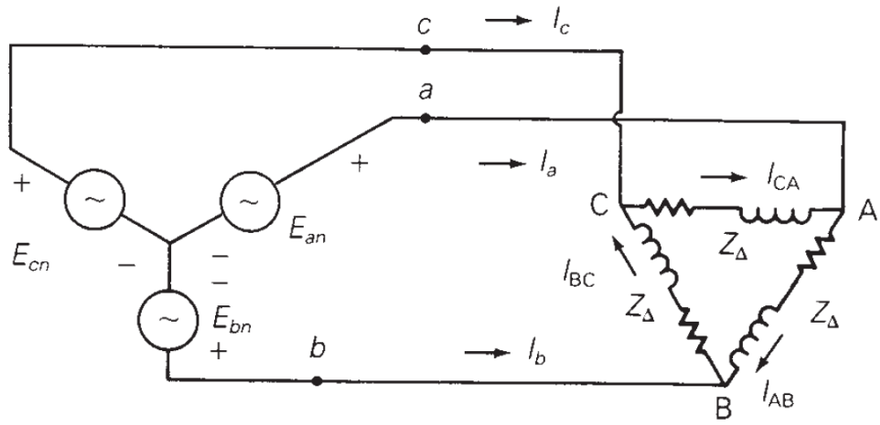


**Figure 2: Schematic Diagram for delta load currents.**

## Theory:

Phasor diagram of line – neutral (phase) voltages and corresponding line – line voltages is shown in Fig. 1 for a balanced 3 phase system.

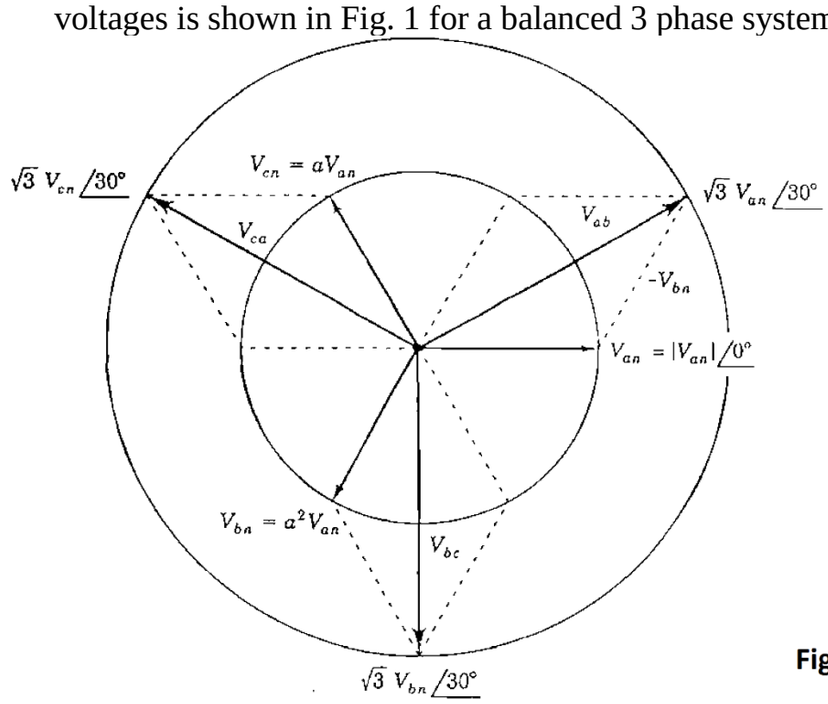


**Fig. 1**

To observe the relationship between the line and phase voltages, consider the line – line voltage $V_{ab}$ which can be written as:

$$V_{ab} = V_{an} - V_{bn} = V_{an} + (-V_{bn})$$

In terms of operator $a$, we see that $V_{bn} = a^2 V_{an}$
where $a = 1 \angle 120°$ , $a^2 = 1 \angle 240°$
so, we have:

$$V_{ab} = V_{an} - a^2 V_{an} = V_{an} (1 - a^2)$$

Now $(1 - a^2)$ can be solved on a calculator to yield in polar form:

$$(1 - a^2) = \sqrt{3} \angle 30°$$

Hence

$$V_{ab} = \sqrt{3} \angle 30° \ V_{an}$$

Similarly,

$$V_{bc} = \sqrt{3} \angle 30° \ V_{bn} \text{ and } V_{ca} = \sqrt{3} \angle 30° \ V_{cn}$$

So, line – line voltages in a Y – system lead phase voltages by 30° and are √3 times larger than them.

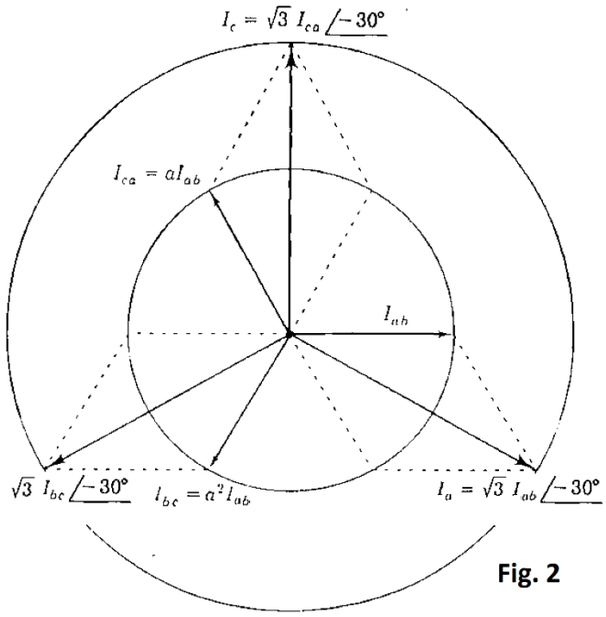


**Fig. 2**

Similar to the case of line – line voltages in a Y – connected system, for a Δ connected system it can be shown that:

$$I_a = \sqrt{3}\, I_{ab} \underline{/-30°}$$

So, in the system, line current ($I_a$) lags the phase current ($I_{ab}$) by 30° and is √3 times larger than it.

**Task 1:**

Connect the system in Delta and Y connection and take analysis from results of leading and lagging of voltages and current.

**Y-Y phase:**

**Simulink:**

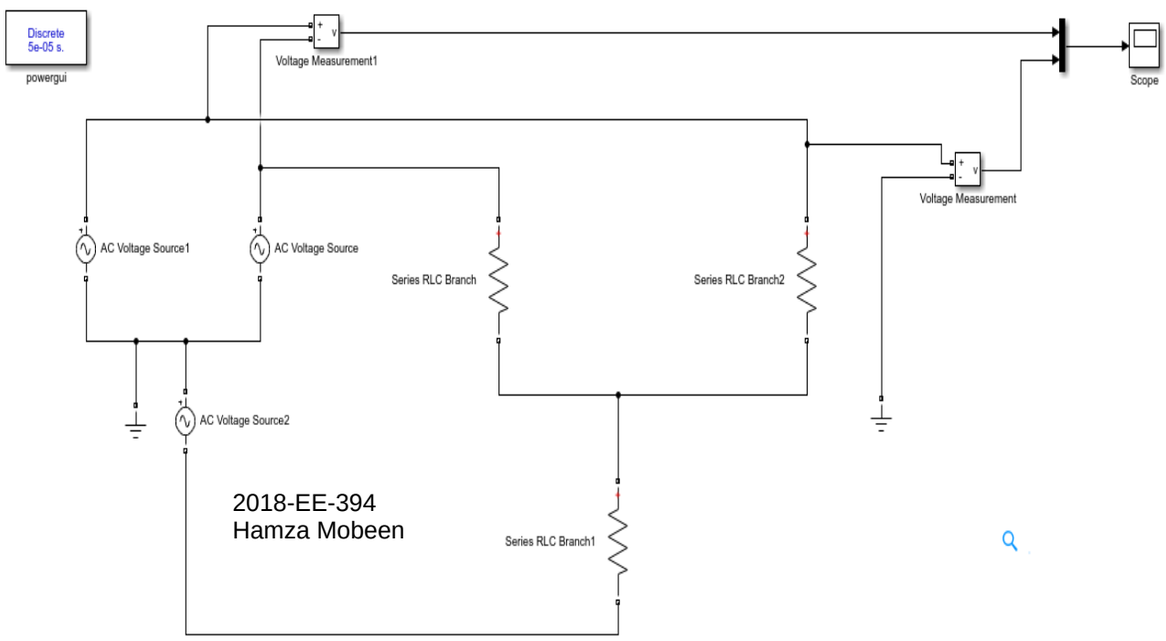


**Figure 4.1 Y connection three phase Simulink**

**Voltage scope:**

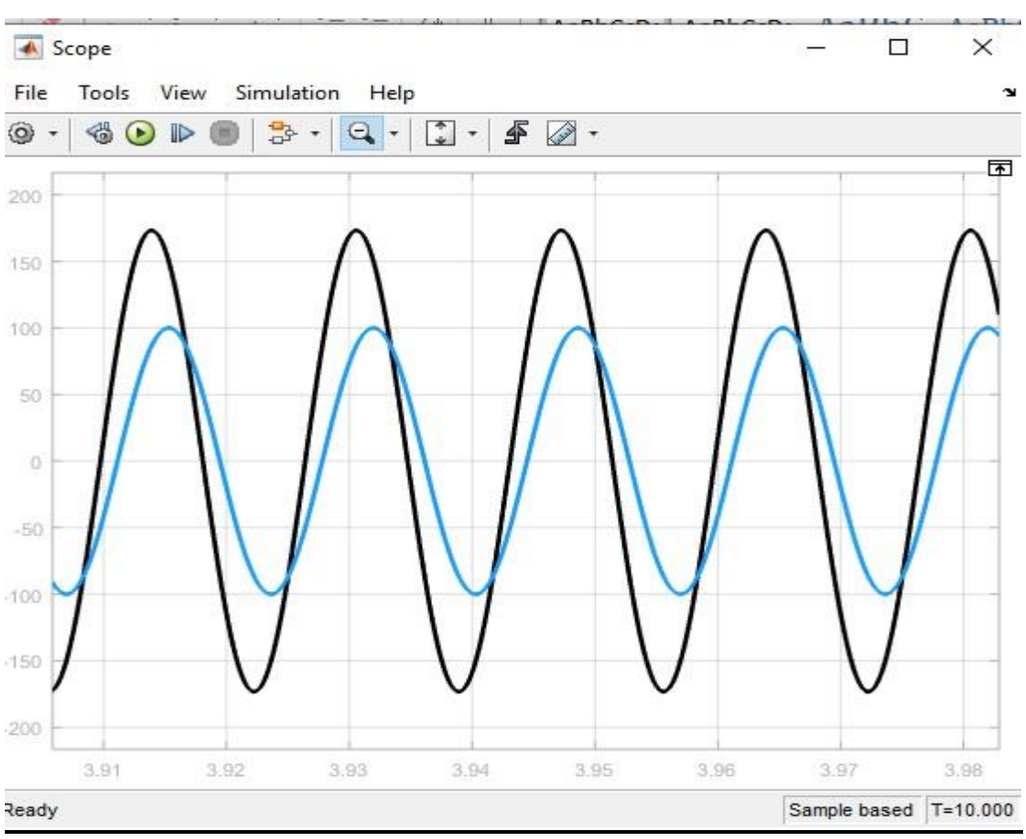


**Figure 4.2 voltage of line and phase waveform**

**Phasor angle difference:**

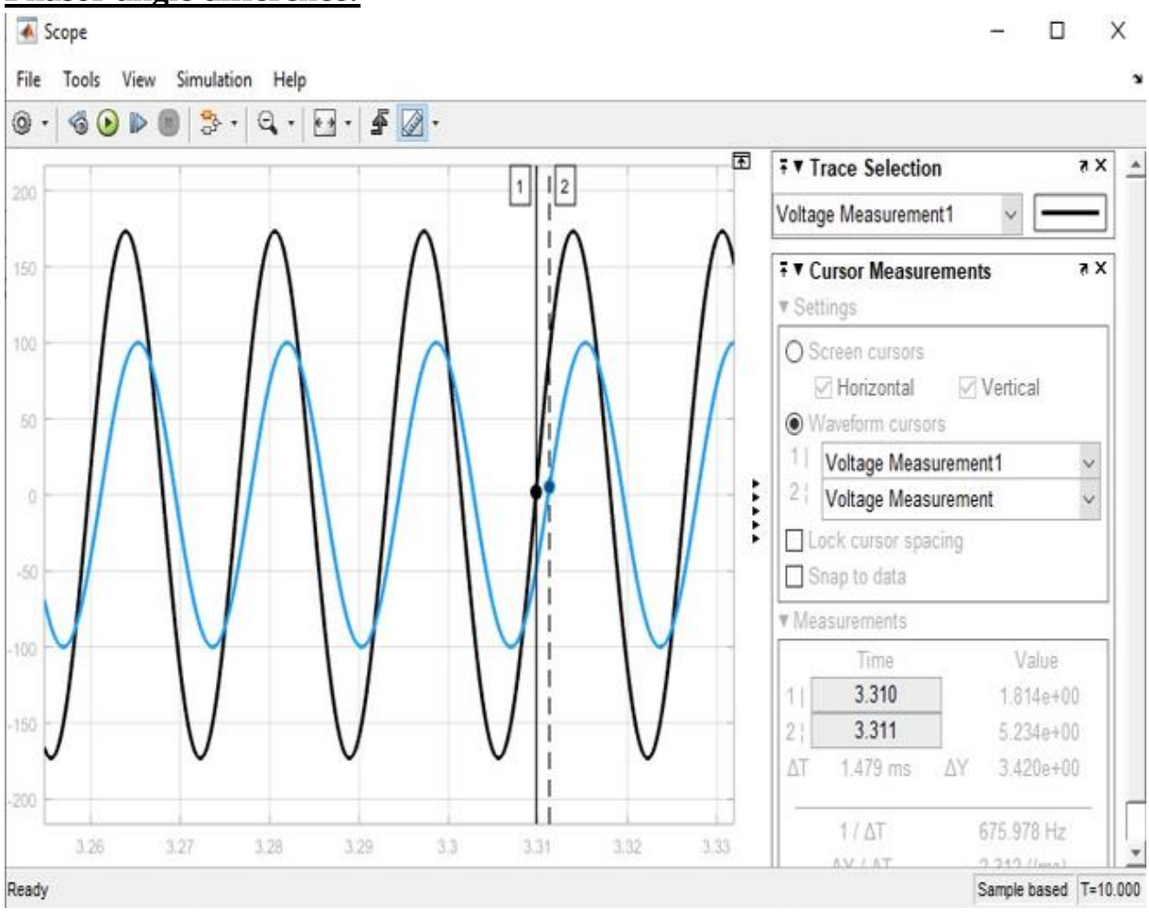


**Figure 4.3 phase angle difference**

**1/T=675.978Hz**

**T=1.479ms**

**Angle=2*pi*f*T=2*3.14*60*1.479m**

**Theta=0.5572872**

$\sin^{-1}(theta) = \sin^{-1}(0.5572872)$

**33.868**

**Delta Simulink:**

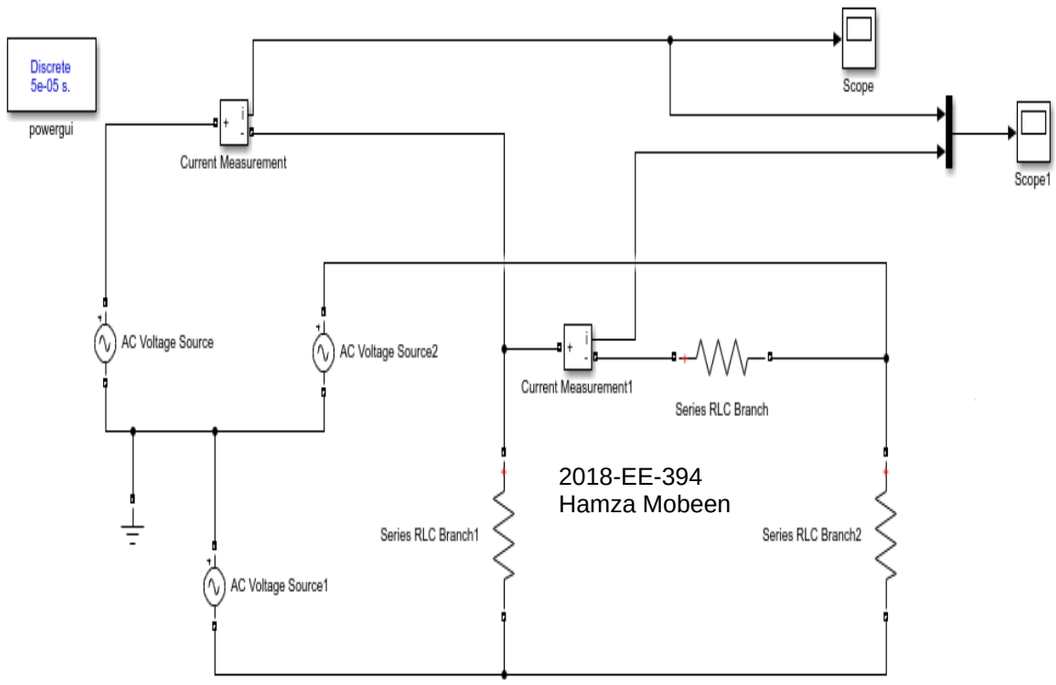


**Figure 4.4 delta connection three phase**

## Line current:

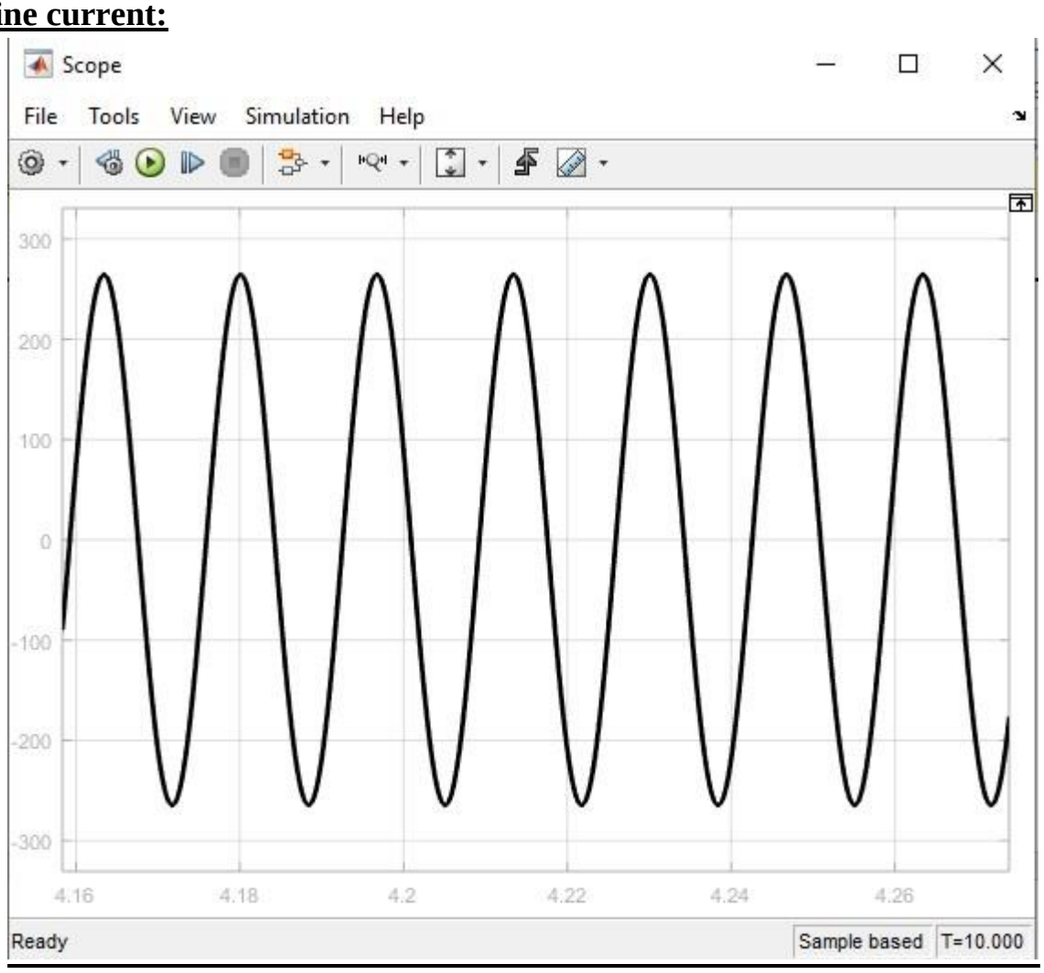


**Figure 4.5 line current of Y-Delta phase**

**Current phasor difference:**

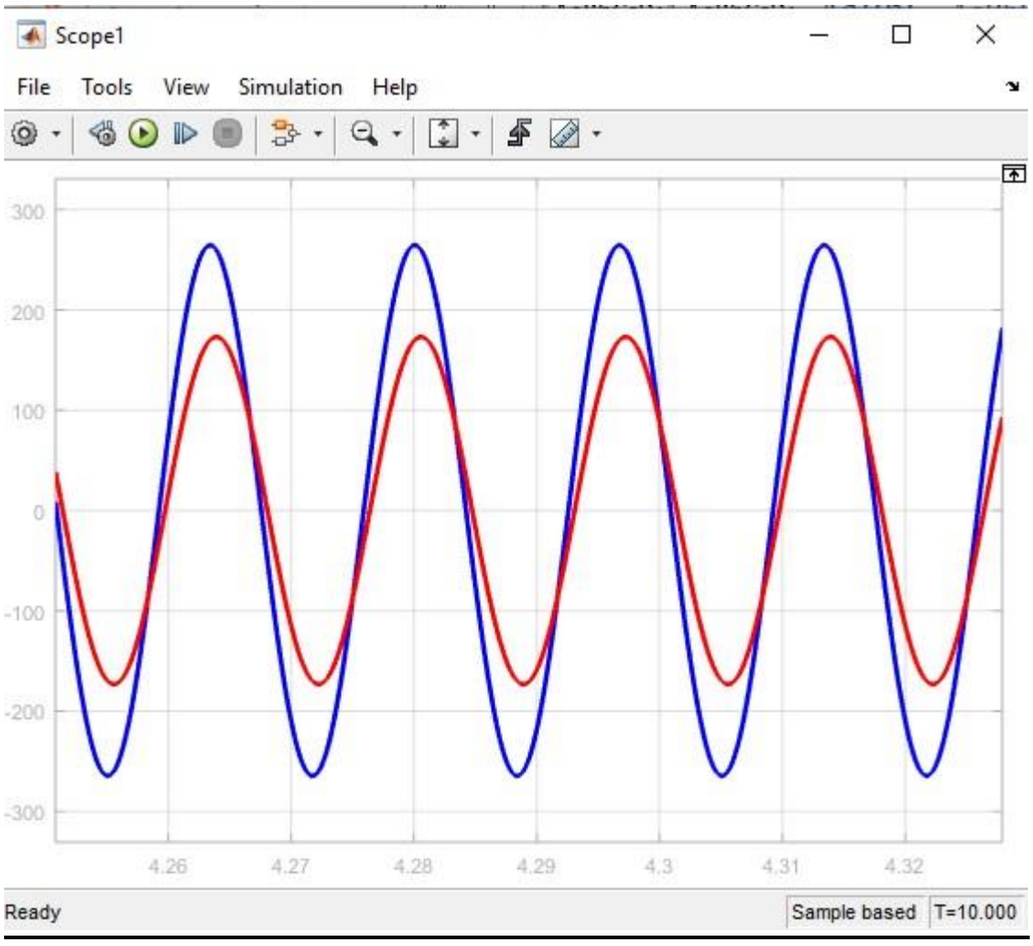


**Figure 4.6 current phasor difference in y-delta phase**

**Phasor angle difference:**

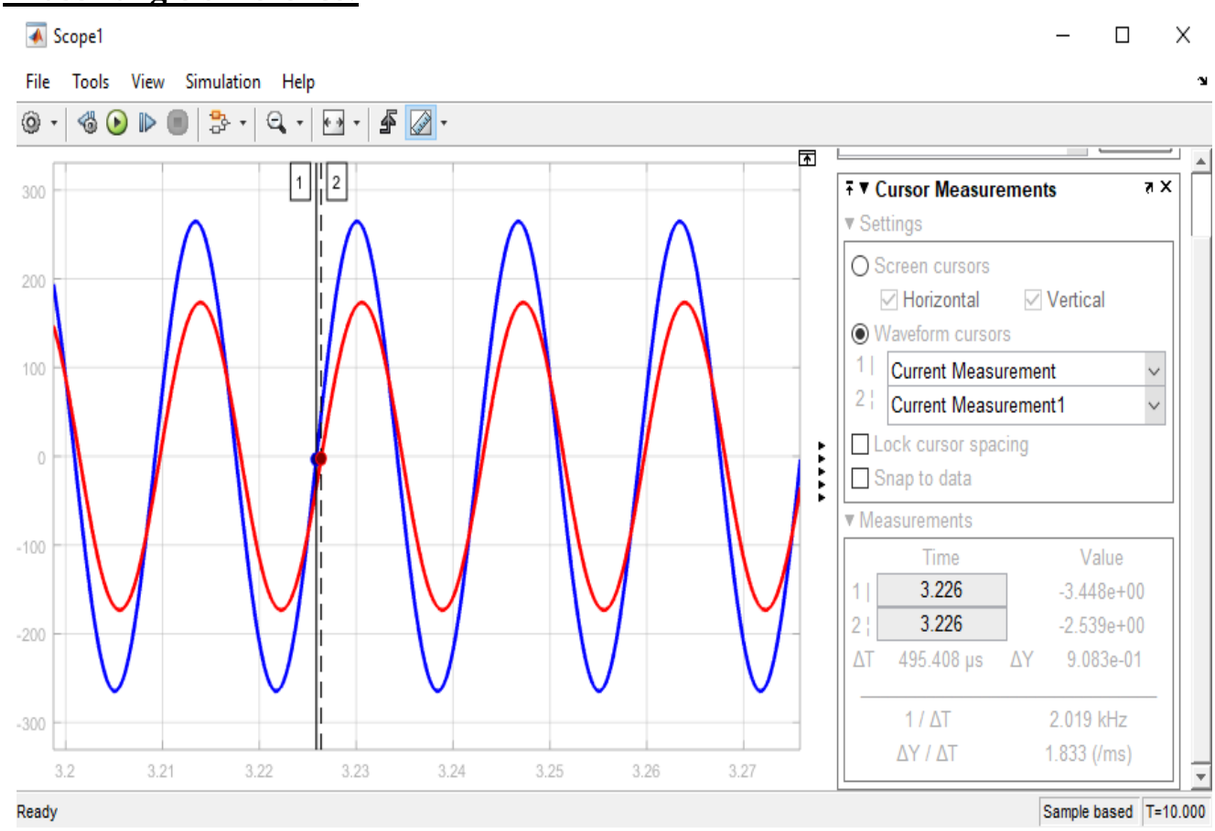


**Figure 4.7 phase angle difference Y-delta**

**1/T=2.019kHz**

**T=495.29$\mu$**

**Angle=2*pi*f*T=2*3.14*60* 495.29$\mu$**

**Theta=0.186627**

$\mathbf{sin^{-1}}(\boldsymbol{theta}) = \mathbf{sin^{-1}}(\mathbf{0.186627})$

**10.756**

**<u>Conclusion:</u>**

In this lab we have observed a Y-Y connection system, the phase difference is assessed in terms of the voltage difference between the Line and Neutral wires. The phase difference in a Y-connection system is measured from the current. The phase difference between two particles or two waves informs us how much before or behind another particle P1 and P2 are in phase in the figure above, with values ranging from 0 to 2 2 radians. The phase difference between two electrical values is defined as the angular phase difference between the highest feasible value of the two alternating quantities with the same frequency.

| | |
|---|---|
| **Name** | **Hamza Mobeen** |
| **Reg. #** | **2018-EE-394** |
| **Date** | **5/05/2021** |
| **Marks** | |

# EXPERIMENT # 5

## $Y_{bus}$ matrix for Power System Calculations

**Objectives:**

1. Determining the $Y_{bus}$ matrix of a given power system and performing calculations for system voltages and then verifying them via simulation.
2. Use of Gaussian Elimination for $Y_{bus}$.

**Lab Tasks:**

1. For the power system shown in the figure; determine the $Y_{bus}$ matrix of the system.
2. Solve for bus voltages using the $Y_{bus}$ matrix: $[V] = [Y]^{-1}[I]$
3. Simulate the system in MATLAB / Simulink and verify the bus voltages and compare it.

4. Apply kron reduction to remove Bus 1 and and repeat all above steps

**Diagram:**

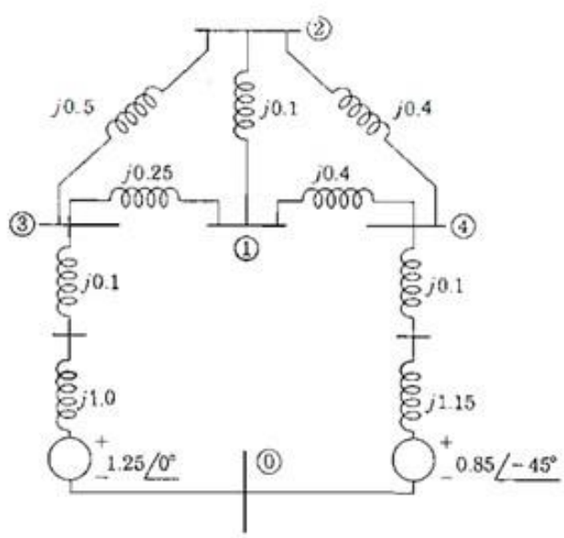

## Task 1:

Create a circuit find voltage in steady state Find y bus by hand

## Simulink:

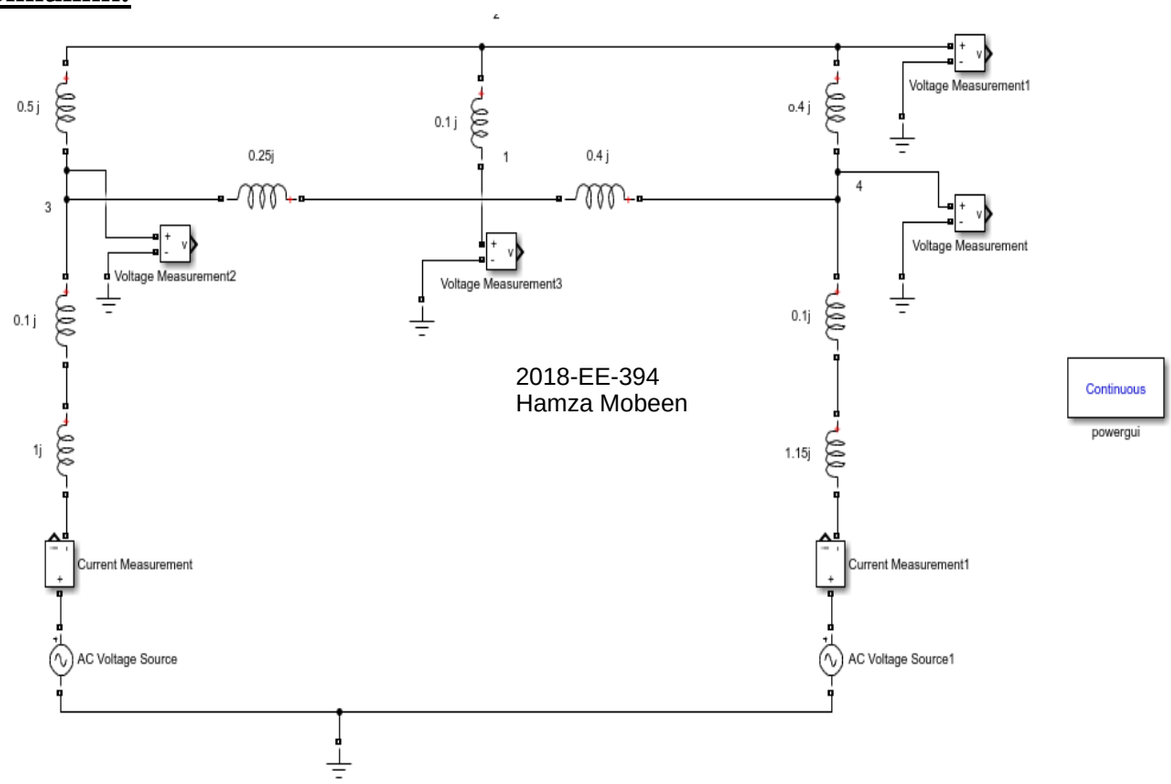


**Figure 5.1 power circuit Simulink whose y bus find**

## Steady state Measurements:

Powergui Steady-State Voltages and Currents Tool. model: lab5_1

Steady state values:

```
MEASUREMENTS:

  1:  'U Voltage Measurement2'  =        1.02 V   -13.78°
  2:  'U Voltage Measurement3'  =        0.98 V   -17.10°
  3:  'U Voltage Measurement1'  =        0.98 V   -17.10°
  4:  'U Voltage Measurement '  =        0.96 V   -19.92°
  5:  'I Current Measurement '  =        0.00 A   -47.20°
  6:  'I Current Measurement1'  =        0.00 A   132.80°
```

**Figure 5.2 steady state current and voltage values of Simulink**

**Theoretical calculation:**

2018-EE-394 Hamza Mobeen.

Task #1:

Y-Bus Calculation:

$Y_{12} = Y_{21} = -y_{12} = \frac{-1}{j0.1} = 10j$

$Y_{13} = Y_{31} = -y_{13} = -\frac{1}{j0.25} = 4j$

$Y_{14} = Y_{41} = -y_{14} = -\frac{1}{j0.4} = 2.5j$

$Y_{23} = Y_{32} = -y_{23} = -\frac{1}{j0.5} = 2j$

$Y_{24} = Y_{42} = -y_{24} = -\frac{1}{j0.4} = 2.5j$

$Y_{34} = Y_{43} = -y_{34} = -\frac{1}{0} = 0j.$

◎ For diagonal entries:

$Y_{11} = y_{12} + y_{13} + y_{14} = -10j + (-4j) - 2.5j = -16.5j$

$Y_{22} = y_{21} + y_{23} + y_{24} = -2j + (-10j) - 2.5j = -14.5j$

$Y_{33} = y_{23} + y_{30} + y_{31} = -2j + (-0.9j) - 4j = -6.91j$

$Y_{44} = y_{42} + y_{41} + y_{40} = -2.5j + (-2.5j - 0.8j = -5.8j$

◎ Y-Bus Matrix.

$$Y = \begin{bmatrix} -16.5j & 10j & 4j & 2.5j \\ 10j & -14.5j & 2j & 2.5j \\ 4j & 2j & -6.91j & 0j \\ 2.5j & 2.5j & 0 & -5.8j \end{bmatrix}.$$

**Figure 5.3 theoretical calculation of Y bus and voltage of buses**

◎ I-Matrix Calculation: 2018-EE-394

$I_1 = 0 \quad , I_2 = 0$

$$I_3 = \frac{1.25\angle 0}{j0.1 + j10} = -1.136j$$

$$I_4 = \frac{0.85\angle -45}{j0.1 + j1.15} = -0.48 - 0.48j$$

$$I = \begin{bmatrix} 0 \\ 0 \\ -1.136j \\ -0.48 + j1.15 \end{bmatrix}.$$

◎ For Voltage Calculations:

$$V = Y^{-1} I$$

$$V = \begin{bmatrix} -16.5j & 10j & 4j & 2.5j \\ 10j & -14.5j & 2j & 2.5j \\ 4j & 2j & -6.9j & 0 \\ 2.5j & 2.5j & 0 & -5.8j \end{bmatrix}^{-1} \begin{bmatrix} 0 \\ 0 \\ -1.136j \\ -0.48 - 0.48j \end{bmatrix}$$

**Voltage measurement through matlab:**

PSAlab_5.m

```
%2018-EE-394
%lab 5 Task#1
y=[-16.5j 10j 4j 2.5j; 10j -14.5j 2j 2.5j; 4j 2j -6.9j 0; 2.5j 2.5j 0 -5.8j];
I=[0; 0; -1.136j; -0.48048-0.48048j];
z=inv(y)
v=z*I
```

Command Window

```
>> PSAlab_5

z =

   0.0000 + 0.6927i   0.0000 + 0.6600i   0.0000 + 0.5928i   0.0000 + 0.5830i
   0.0000 + 0.6600i   0.0000 + 0.7067i   0.0000 + 0.5875i   0.0000 + 0.5891i
   0.0000 + 0.5928i   0.0000 + 0.5875i   0.0000 + 0.6589i   0.0000 + 0.5088i
   0.0000 + 0.5830i   0.0000 + 0.5891i   0.0000 + 0.5088i   0.0000 + 0.6777i


v =

   0.9536 - 0.2801i
   0.9504 - 0.2831i
   0.9929 - 0.2444i
   0.9035 - 0.3256i
```

**Figure 5.4matlab calculation of V=[Y]^-1 [I]**

**Comparison between simulation and theoretical calculations**

| Bus Number | Voltage from simulations | Theoretical voltage |
|---|---|---|
| **Bus 1** | **0.98<-17.10(0.9366-0.288i)** | **0.9536-0.2801i** |
| **Bus2** | **0.98<-17.10(0.9366-0.288i)** | **0.9506-0.2831i** |
| **Bus 3** | **1.02<-13.78(0.9906-0.2429i)** | **0.9929-0.2444i** |
| **Bus 4** | **0.96<-19.92(0.9025-0.327i)** | **0.90535-0.3256i** |

**Question(s) / Exercise:**

A. Now use Kron Reduction method to remove node 1 from the system. Write the equations for the remaining system and repeat all procedure for new circuit?

## Schematic:

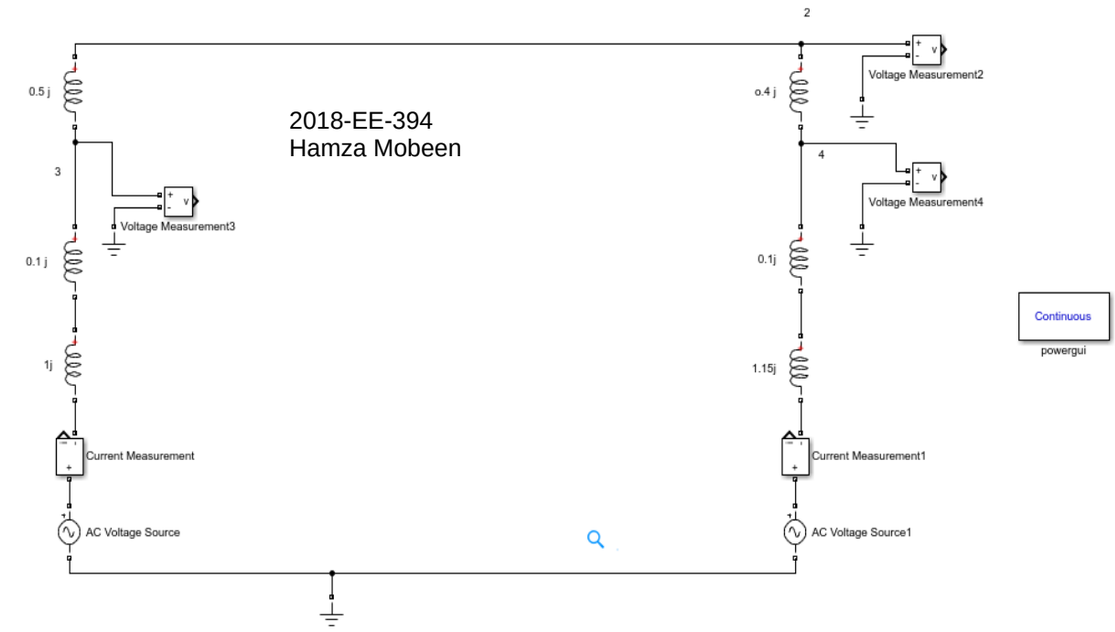


**Figure 5.5 Simulink of reduced bus structure**

## Steady state measurements:

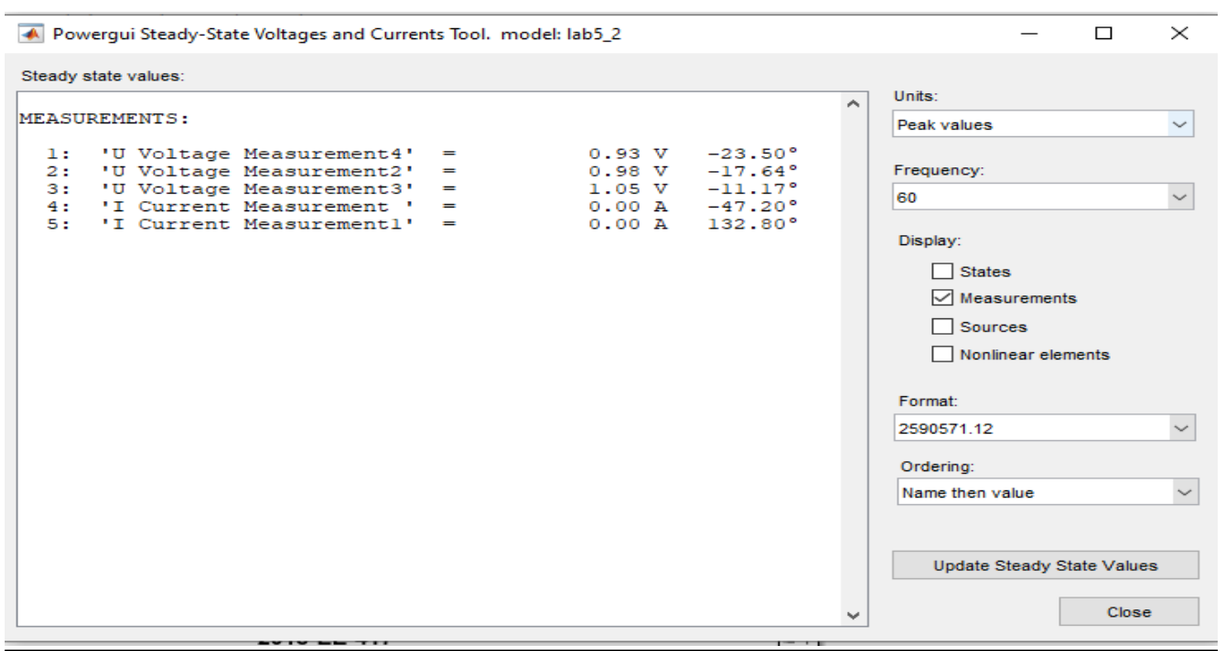


**Figure 5.6 steady state calculation of voltage and current of reduced voltage**

## Theoretical Y bus calculation:

2018-EE-394
Hamza Mobeen

Task # 2:

Reduced Y-Bus Calculations:

Formula:- $Y_{jk,new} = Y_{jk\,old} - \frac{Y_{jp} - Y_{pk}}{Y_{pp}}$

$Y_{22New} = Y_{22} - \frac{(Y_{21})(Y_{12})}{Y_{11}} = -14.5j - \frac{(10j)(10j)}{-16.5j}$

$= -8.43j$

$Y_{23\,New} = Y_{23} - \frac{(Y_{21})(Y_{13})}{Y_{11}} = 2j - \frac{(10j)(4j)}{-16.5j} = 4.42j$

$Y_{24\,New} = Y_{42,New} = Y_{24} - \frac{(Y_{21})(Y_{14})}{Y_{11}} = 2.5j - \frac{(10j)(2.5j)}{-16.5j} = 4.015j$

$Y_{33,New} = Y_{33} - \frac{(Y_{31})(Y_{13})}{Y_{11}} = -6.9j - \frac{(4j)(4j)}{-16.5j} = -5.93j$

$Y_{34,\,New} = Y_{43,New} = Y_{34} - \frac{(Y_{31})(Y_{14})}{Y_{11}} = 0 - \frac{(4j)(2.5j)}{-16.5j} = 0.606j$

$Y_{44\,New} = Y_{44} - \frac{(Y_{41})(Y_{14})}{Y_{11}} = -5.8j - \frac{(2.5j)(2.5j)}{-16.5j} = -5.4j.$

◎ Y-BUS Reduced Matrix:

$$Y = \begin{bmatrix} -8.4j & 4.4j & 4.01j \\ 4.4j & -5.93j & 0.606j \\ 4.01j & 0.606j & -5.4j \end{bmatrix}.$$

2018-EE-394

$I_1 = 0 \qquad I_2 = \dfrac{1.25\angle 0}{j0.1 + j1.0} = -1.136j$

$I_3 = \dfrac{0.85\angle -45}{j0.1 + j1.15} = -0.48 - 0.48j.$

$$I = \begin{bmatrix} 0 \\ -1.136j \\ -0.48 - 0.48j \end{bmatrix}$$

◎ For Voltage calculation:

$V = Y^{-1} I$

$$V = \begin{bmatrix} -8.4j & 4.4j & 4.01j \\ 4.4j & -5.93j & 0.606j \\ 4.01j & 0.606j & -5.4j \end{bmatrix}^{-1} \begin{bmatrix} 0 \\ -1.136j \\ -0.48 - 0.48j \end{bmatrix}$$

**Figure 5.7 theoretical calculation of reduced Y bus and voltage of buses**

**Voltage measurement through matlab**

```
%2018-EE-394
%lab 5 Task#2
y=[-8.44j 4.4242j 4.0152j; 4.4242j -5.94j  0.61j ; 4.0152j 0.61j -5.4212j];
I=[0; -1.13636j; -0.48048-0.48048j];
z=inv(y)
v=z*I
```

**OUTPUT:**

```
Command Window
>> PSAlab_5_2

z =

   0.0000 + 0.7058i   0.0000 + 0.5862i   0.0000 + 0.5887i
   0.0000 + 0.5862i   0.0000 + 0.6571i   0.0000 + 0.5081i
   0.0000 + 0.5887i   0.0000 + 0.5081i   0.0000 + 0.6777i


v =

   0.9490 - 0.2829i
   0.9908 - 0.2441i
   0.9030 - 0.3256i
```

**Figure 5.8 matlab calculation of voltage**

**Comparison between simulation and theoretical calculations**

| Bus number | Voltage through Simulink | Voltage via theoretical |
|---|---|---|
| **Bus 2** | **0.98<-17.64(0.9339-0.2969i)** | **0.9516-0.2848i** |
| **Bus 3** | **1.05<-11.13(1.030-0.2034i)** | **0.9903-0.2448i** |
| **Bus 4** | **93<-23.50(0.8529-0.3708i)** | **0.906-0.3279i** |

**Conclusion:**

In this lab, we learnt about the Y bus. We took a four-bus system and calculated the voltages and currents at each node. We computed all of these voltages and currents in the form of a matrix and then on Simulink. We also removed a bus from the four-bus system and calculated the voltages and currents of the three-bus system, which is a modified version of the previous four-bus system, using the Kron reduction method.

| | |
|---|---|
| **Name** | **Hamza Mobeen** |
| **Reg. #** | **2018-EE-394** |
| **Date** | **5/19/2021** |
| **Marks** | |

## EXPERIMENT # 6

# $Z_{bus}$ matrix for Power System Calculations

## *Instructions:*

- ***Read the complete manual before starting.***
- ***Remember to adjust the solver & related settings in MATLAB.***
- ***The Simulink file must be neat and clearly understandable.***

**Lab Tasks:**

1. For the power system shown in the figure; directly determine the $Y_{bus}$ matrix of the system and then invert it to find $Z_{bus}$ matrix.
2. Calculate the bus voltages.
3. Simulate the system in MATLAB / Simulink and find the bus voltages.
4. Attach a capacitor of reactance 5.0 per unit between node 4 and reference node.
5. Calculate the capacitor current and the resultant voltage changes at each bus using $Z_{bus}$ matrix.
6. Verify the bus voltage changes via simulation

## Diagram:

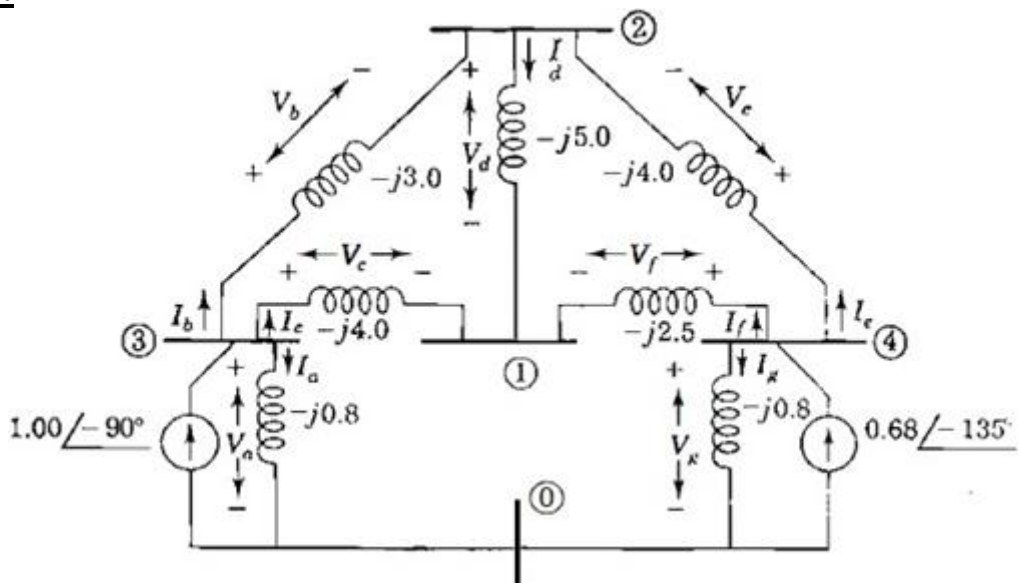

## Task:

1. **For the power system shown in the figure; directly determine the $Y_{bus}$ matrix of the system and then invert it to find $Z_{bus}$ matrix.**
2. **Calculate the bus voltages.**
3. **Simulate the system in MATLAB / Simulink and find the bus voltages.**

## Schematics:

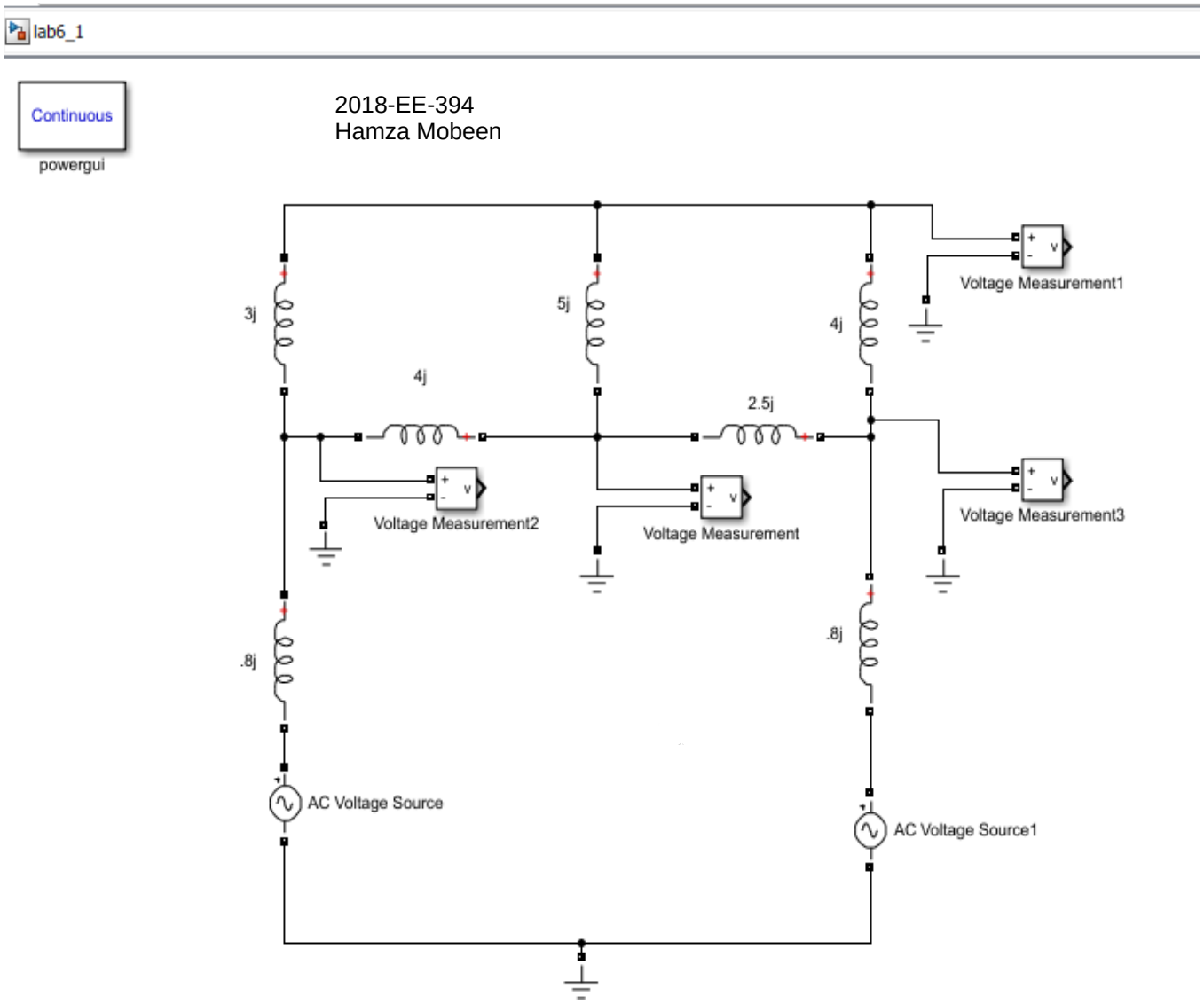


**Figure 6.1 schematic circuit of power system**

## Steady state measurement:

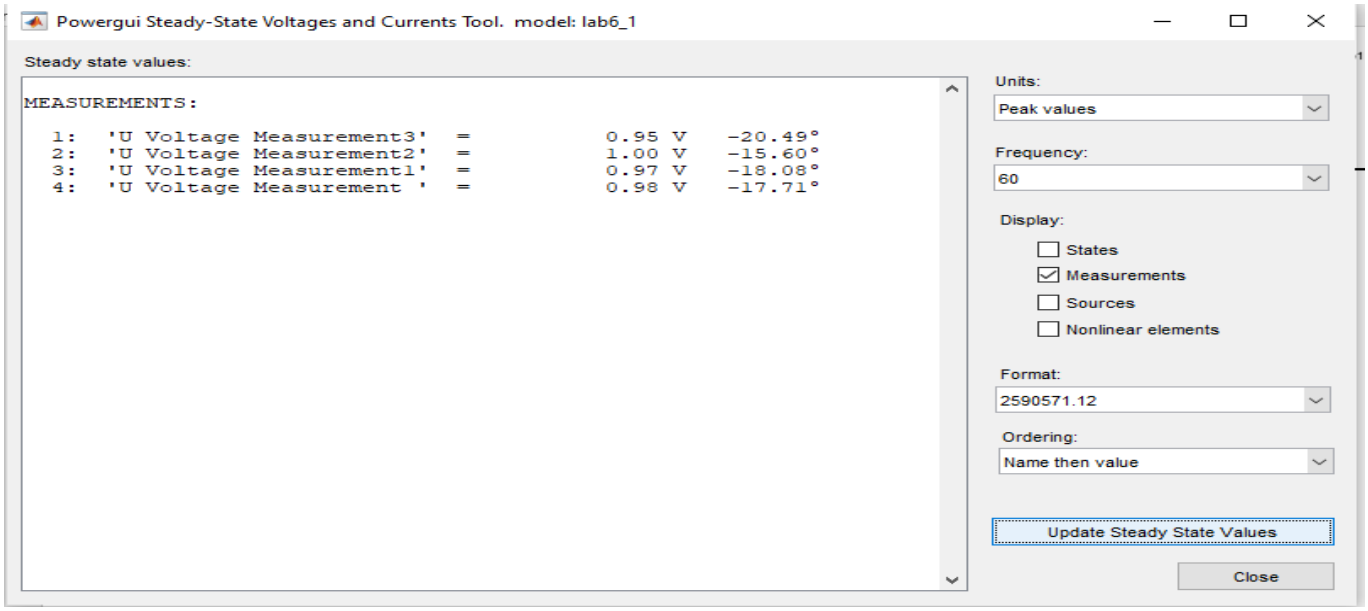


**Figure 6.2 Simulink calculation for voltage measurement of the power system**

## Matlab calculation:

```
%2018-EE-394
%LAB06 Task#1
Y=[-11.5j 5j 4j 2.5j;5j -12j 3j 4j;4j 3j -7.8j 0j;2.5j 4j 0j -7.3j];
I=[0;0;-j;-0.4808-0.4808j];
Z=inv(Y)
V=Z*I
```

```
Command Window
>> LAB06Task1PSA

z =

   0.0000 + 0.7321i   0.0000 + 0.6690i   0.0000 + 0.6327i   0.0000 + 0.6173i
   0.0000 + 0.6690i   0.0000 + 0.7269i   0.0000 + 0.6226i   0.0000 + 0.6274i
   0.0000 + 0.6327i   0.0000 + 0.6226i   0.0000 + 0.6921i   0.0000 + 0.5579i
   0.0000 + 0.6173i   0.0000 + 0.6274i   0.0000 + 0.5579i   0.0000 + 0.6921i


v =

   0.9295 - 0.2968i
   0.9243 - 0.3016i
   0.9604 - 0.2682i
   0.8906 - 0.3328i
```

**Figure 6.3 matlab calculation for Z bus and voltages of power system**

**Theoretical:**

Z-Bus 2018-EE-394

Task#1

$$Y_{Bus} = \begin{bmatrix} Y_{11} & Y_{12} & Y_{13} & Y_{14} \\ Y_{21} & Y_{22} & Y_{23} & Y_{24} \\ Y_{31} & Y_{32} & Y_{33} & Y_{34} \\ Y_{41} & Y_{42} & Y_{43} & Y_{44} \end{bmatrix}$$

$Y_{11} = -11-5j$ , $Y_{21} = 5j$ , $Y_{31} = 4j$ , $Y_{41} = 2.5j$

$Y_{12} = j5$ , $Y_{22} = -12j$ , $Y_{32} = 3j$ , $Y_{42} = 4j$

$Y_{13} = 4j$ , $Y_{23} = 3j$ , $Y_{33} = -7.8j$ , $Y_{43} = 0$.

$Y_{14} = 2.5j$ , $Y_{24} = 4j$ , $Y_{34} = 0$ , $Y_{44} = -7.3j$.

$$Y_{Bus} = \begin{bmatrix} -11.5j & 5j & 4j & 2.5j \\ 5j & -12j & 3j & 4j \\ 4j & 3j & -7.8j & 0 \\ 2.5j & 4j & 0 & -7.3j \end{bmatrix}$$

$$Z_{Bus} = \begin{bmatrix} 0.7312j & 0.6690j & 0.5397j & 0.6173j \\ 0.6690j & 0.7261j & 0.622j & 0.627j \\ 0.6827j & 0.5226j & 0.6921j & 0.55j \\ 0.6173j & 0.6274j & 0.557j & 0.692j \end{bmatrix}$$

**Figure 6.4 theoretical calculation**

$$I = \begin{bmatrix} 0 \\ 0 \\ -j \\ -0.4808 - 0.4808j \end{bmatrix}$$

$$V = Z * I.$$

$$V = \begin{bmatrix} 0.9295 - 0.2968j \\ 0.9243 - 0.3016j \\ 0.9604 - 0.2682j \\ 0.8906 - 0.3328j \end{bmatrix}$$

**Comparison between Simulink and theoretical voltages measured:**

| Bus number | Voltages from Simulink | Theoretical voltages |
|---|---|---|
| Bus 1 | 0.98<-17.71(0.9335-0.2981j) | 0.9295-0.2968j |
| Bus 2 | 0.97<-18.08(0.922105-0.301j) | 0.9243-0.3016j |
| Bus 3 | 1<-15.60(0.96316-0.26891j) | 0.9604-0.2682j |
| Bus4 | 0.95<-20.49(0.889896-0.3325j) | 0.8906-0.3328j |

**Tasks:**

1. **Attach a capacitor of reactance 5.0 per unit between node 4 and reference node.**
2. **Calculate the capacitor current and the resultant voltage changes at each bus using $Z_{bus}$ matrix.**
3. **Verify the bus voltage changes via simulation**

**Schematics:**

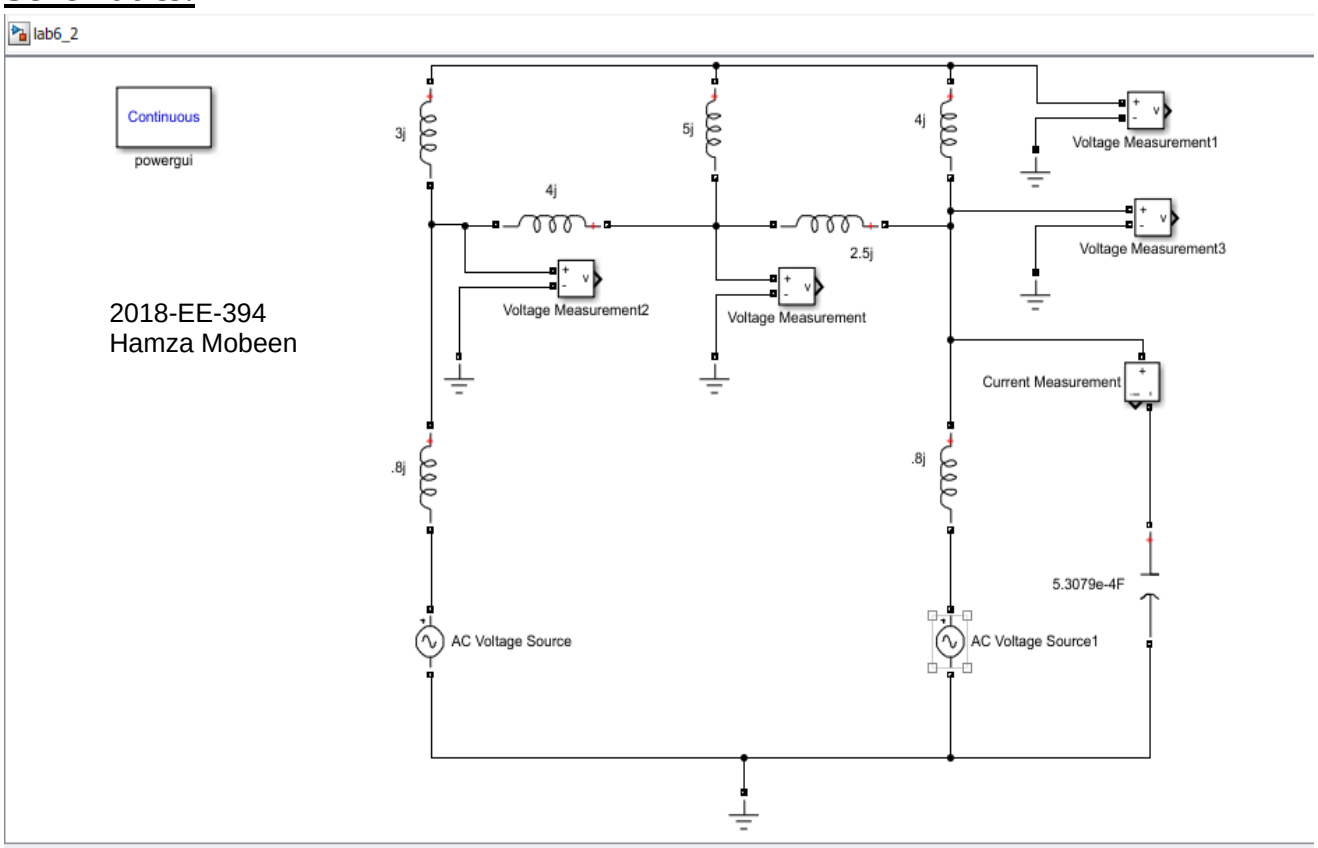


**Figure 6.5 schematic circuit by adding capacitor at bus 4**

## Steady state measurement:

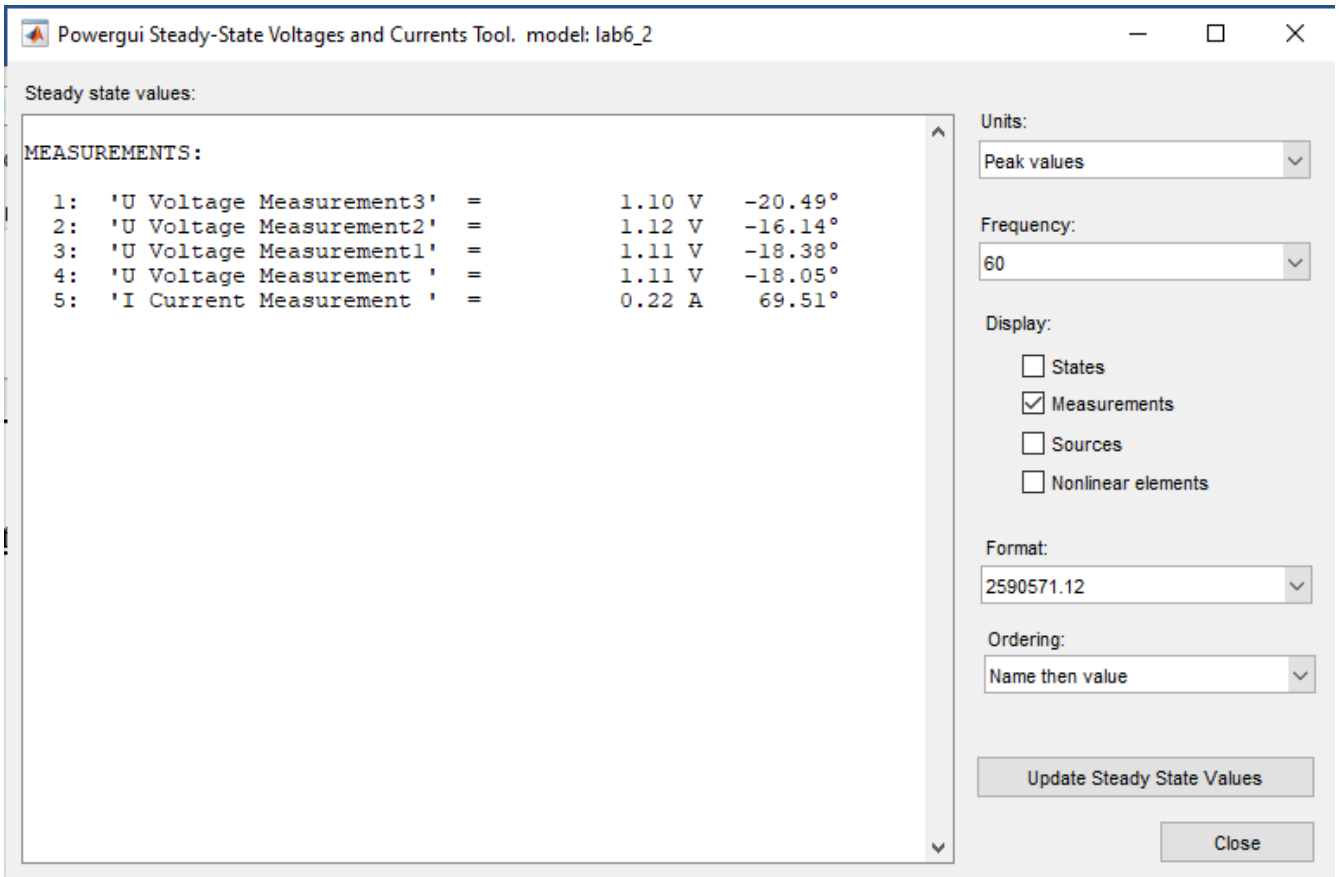


**Figure 6.6 steady state voltage measurement**

**Theoretical calculation:**

Z-Bus 2018-EE-394

Capacitor is connected at Bus #4:

$Z_c = -5j$

$I_c = \frac{V_4}{Z_{44}+Z_c} = \frac{0.95\angle -20.54}{0.692j+(-5j)}$.

$= 0.22\angle 69.46\,A$

As we know that

$\Delta V_1 = I_c Z_{41} = (0.22\angle 69.46)(0.6173\angle 90^\circ)$

$\Delta V_1 = 0.136\angle 159.51\ V.$

$\Delta V_2 = I_c Z_{42} = (0.22\angle 69.46)(0.6274\angle 90^\circ).$

$\Delta V_2 = 0.1385\angle 159.45^\circ V.$

$\Delta V_3 = I_c Z_{43} = (0.22\angle 69.46)(0.5579\angle 90^\circ).$

$= 0.12302\angle 159.5\ V.$

$\Delta V_4 = I_c Z_{44} = (0.22\angle 69.46)(0.5921\angle 90^\circ).$

$= 0.1523\angle 159.46\ V.$

$V_{1(new)} = V_{1(old)} + \Delta V_1.$

$= 0.98 + 0.136 = 1.116\ V.$

$V_{2(new)} = V_{2(old)} + \Delta V_2.$

$= 1 + 0.1383$

$= 1.11835\ V.$

$$V_{3(new)} = V_{3(old)} + \Delta V_3.$$
$$= 1 + 0.123 = 1.12V.$$

$$V_{4(new)} = V_{4(old)} + \Delta V_4$$
$$= 0.95 + 0.523$$
$$= 1.102V.$$

So results:

$I_{cap} = 0.22A.$

$V_1 = 1.116V.$

$V_2 = 1.11V.$

$V_3 = 1.12V$

$V_4 = 1.102V.$

**Figure 6.7 theoretical calculation**

**Comparison between Simulink and theoretical measured voltages:**

| Bus number | Voltages from Simulink | Theoretical Voltages |
|---|---|---|
| **Bus 1** | **1.11v** | **1.116** |
| **Bus 2** | **1.11v** | **1.11v** |
| **Bus 3** | **1.12v** | **1.12v** |
| **Bus 4** | **1.10v** | **1.102v** |
| **I capacitor** | **0.22A** | **0.22A** |

Results of calculation

$I_{cap}$ = :0.22A

$V_1$ = 1.11v $V_2$ = 1.11v

$V_3$ = 1.12v $V_4$ =1.10v

Results of Simulation – Attach simulation figure and power gui results snapshot

$I_{cap}$ = :0.22A

$V_1$ = 1.116V $V_2$ =1.11V

$V_3$ = 1.12V $V_4$ =1.102V

**Conclusion:**

In this lab we constructed a Z bus through Y bus. For this we constructed the inverse of the Y matrix in the MATLAB and computed the new voltages. The Z bus was then changed by adding capacitance, and the change in voltages, new voltages, and current were computed and confirmed using MATLAB. We also computed and simulated the capacitor current using voltages and impedances.

| | |
|---|---|
| **Name** | **Hamza Mobeen** |
| **Reg. #** | **2018-EE-394** |
| **Date** | **5/26/2021** |
| **Marks** | |

# EXPERIMENT # 7

## Introduction to Power World Simulator.

## Objective:

At the end of this lab session students will be able to

- To design Electric Power Transmission system in in Power World Simulator.
- To observe power flow in power System.
- To construct Y-bus of system.

## Introduction:

Power World is a great and "powerful" utility for solving power flows. Solving a power system is a little different from circuit analysis. Instead of being given voltages at certain nodes or impedances, you are often given load and generator powers. This makes solving the circuit difficult to do by hand, but easy using a tool like Power World. Most utilities use Power World or similar programs for solving their systems, such as PSS/E.

Adding Power World to your Start Menu:

1. Add Power World to your start menu. In computer , click Start > All Applications >Add Applications to Start Menu, and search for Power World.

2. Launch Power World.

## Mode of Operations:

There are two modes of operations.

- Run Mode
- Edit Mode

## Edit Mode of Operation:

In edit mode of operation, the network is designed. All changings of network is done in this mode of operation. The window of draw network is in Edit mode of operation in which options of drawing all components are presents.

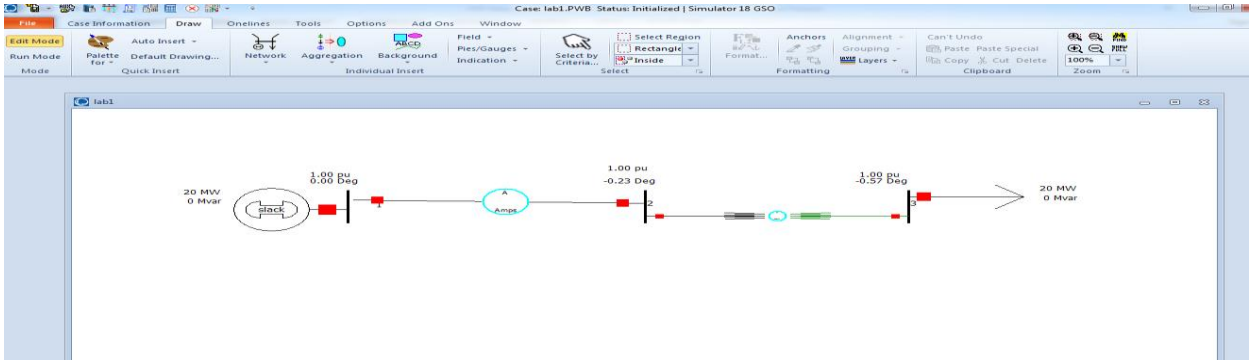


Figure No: 1

## Run Mode:

In run mode system power flow is analysed. Active and reactive power at each bus is analysed. All fault analysis can be done in run mode of operation.

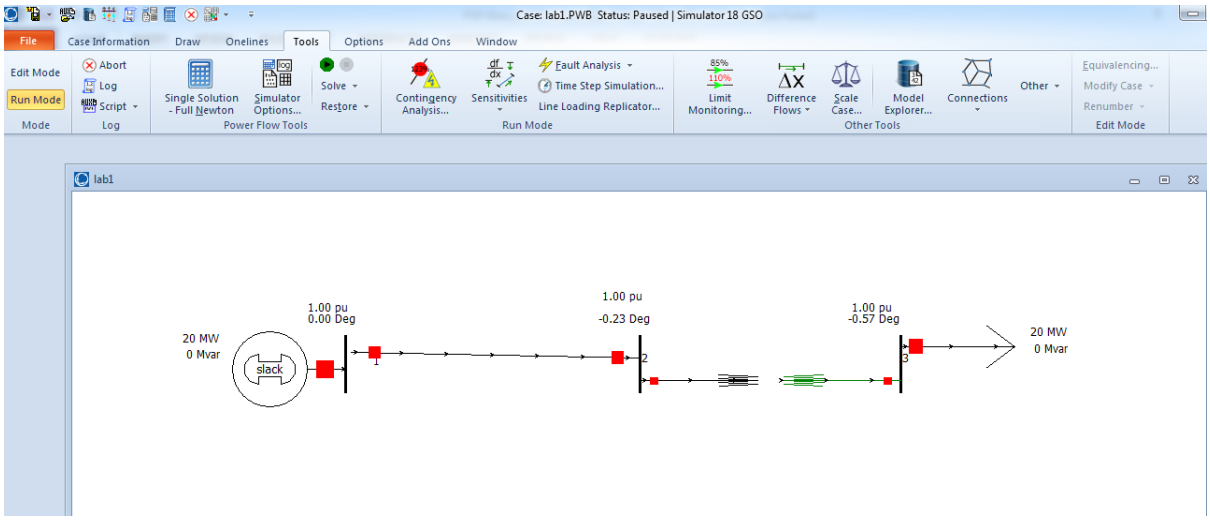


Figure No: 2

## Inserting a Bus:

- The most important component of the power system model is the bus. Buses are used to represent the junction points in the power system where several devices are connected. In building a power system model using simulator you will draw buses onto the one-line diagram, attach devices such as generators and loads to the busses and connect different busses together with transmission lines and transformers. To insert bus
- Select **Network** > **Bus** from the individual insert ribbon group on the draw ribbon Tab. This prepare simulator to insert bus.

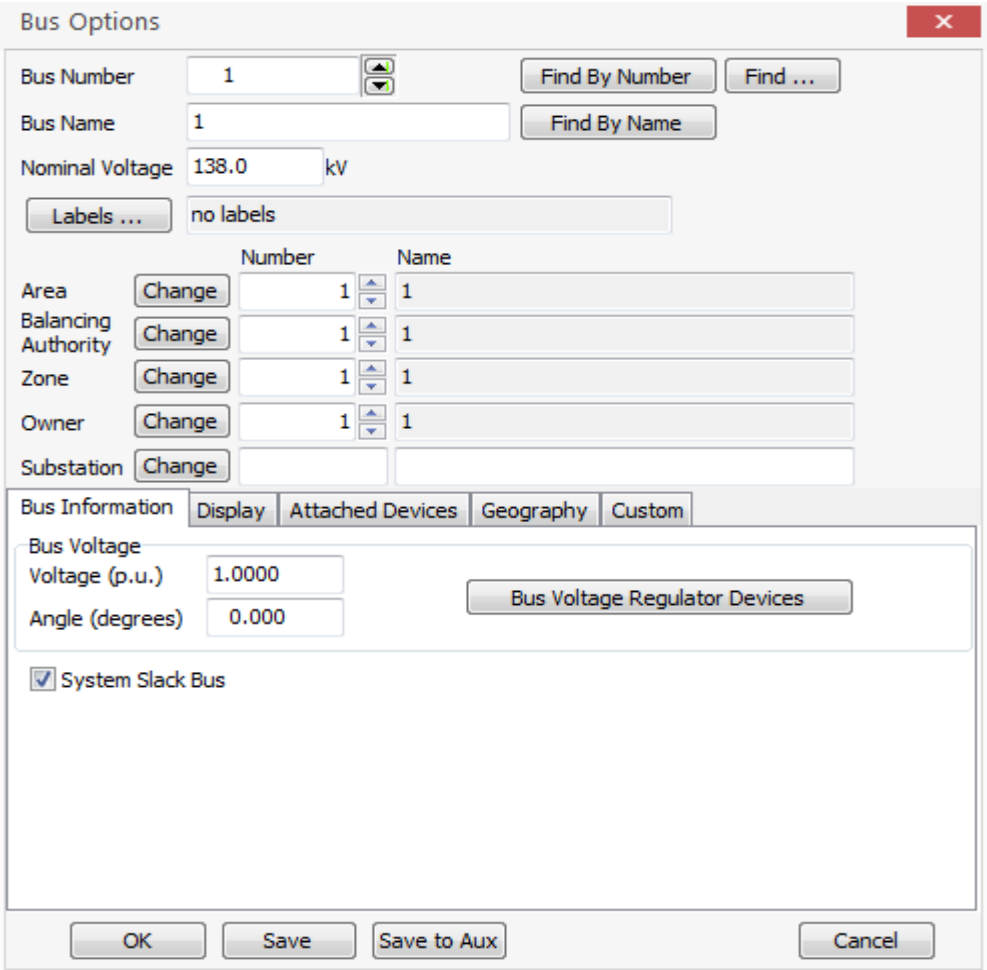


**Insert a Generator:**

- Next, we are going to attach generator to the bus. Generators may be inserted in a similar manner to insert bus.
- Select **network > generator** from the individual insert the ribbon group on the draw ribbon tab.
- Left click the bus on the one-line diagram to which you want to attach the generator. The generator option dialog will automatically open. The dialog is used to specify the new generator unit identifier, display size, orientation, MW output and limits, reactive power limits, set point voltages and cost model.
- Select the display information tab. The orientation field is used to specify the direction the generator will extend from the bus. The Anchored checkbox forces the generator to move with its specified bus when repositioning the bus on the one-line.

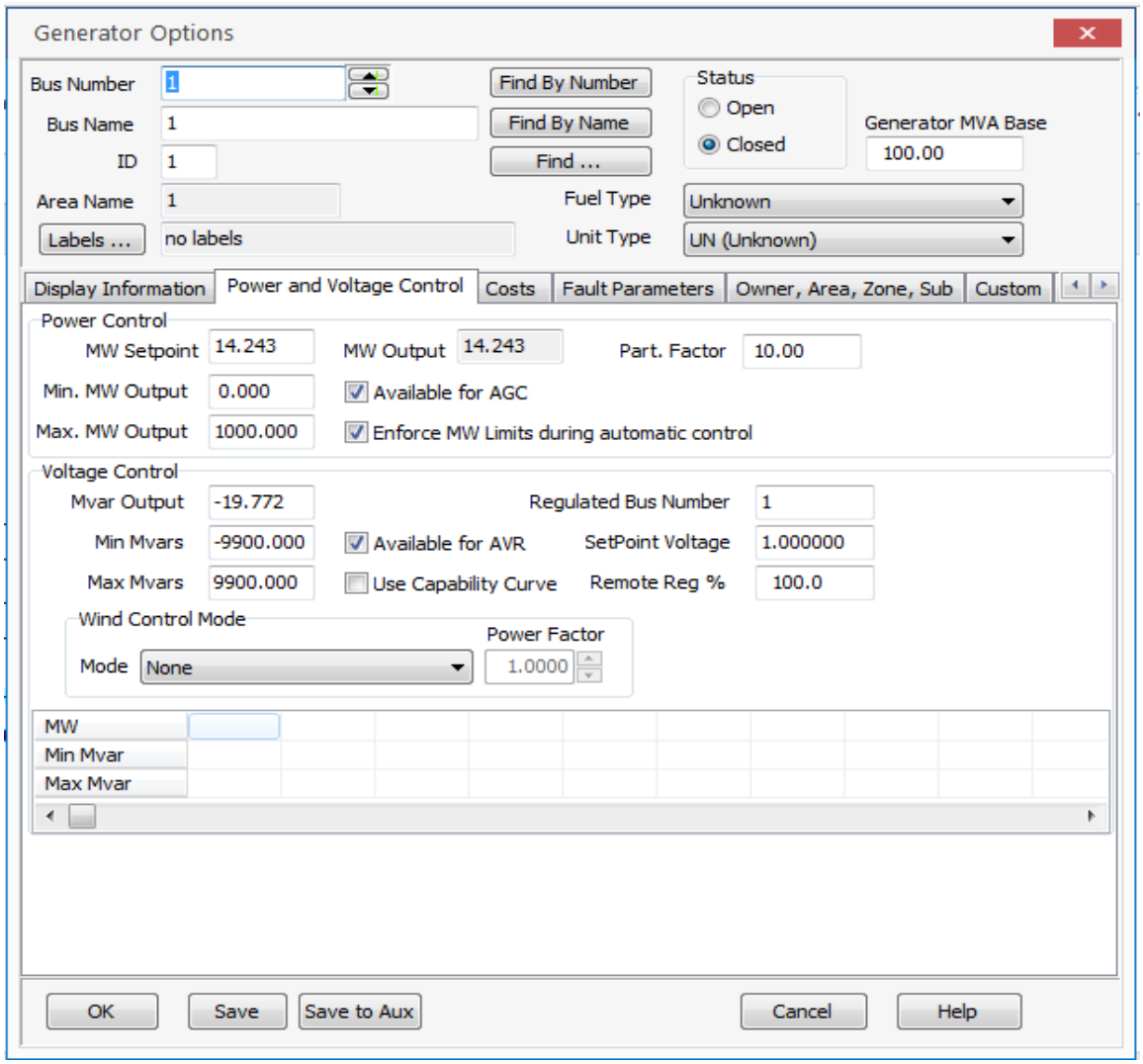


## Insert a Load:

- Select network > Load from individual insert ribbon group on the draw ribbon tab.
- Left click in the centre of the bus. The load option dialog box automatically opens the constant power MW and MVAR fields confirm that load is 200 MW and 100 MVAR. In addition to constant power loads, simulator also allows the modelling of voltage dependent loads.
- Select up in the orientation field under the load information tab to make the load point up. Verify that the anchored box is checked to force the load to move with the selected bus. Its orientation can be changed.
- Click OK to accept the default values for all remaining fields close the load option dialog and insert the load. A circuit breaker symbol is automatically included with each load.

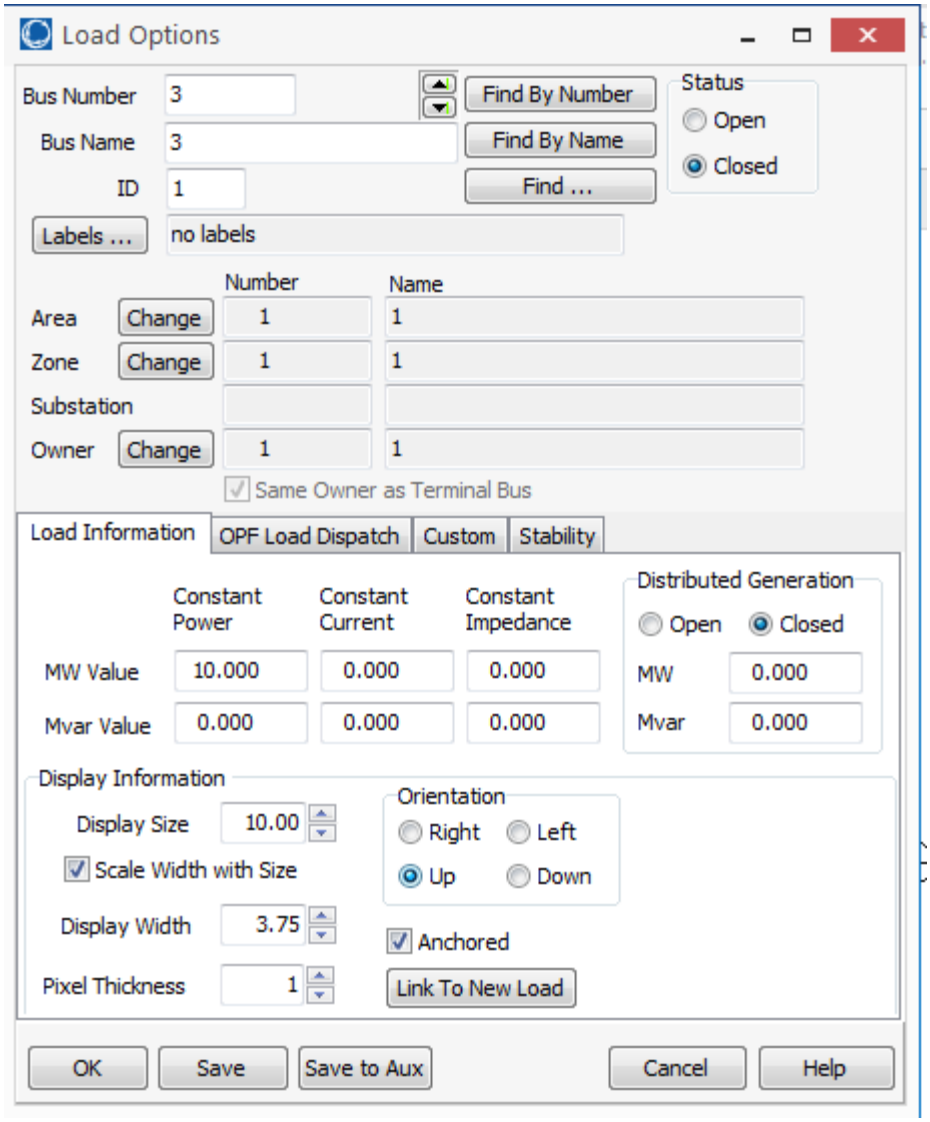


**Inserting a Transmission line:**

- Select **Network> Transmission** line from the individual insert ribbon group on the draw ribbon tab.
- Left click at the point where you want the new line to originate. This point is usually located on one of proposal lines terminal busses. For this example, originate the line at the bus.
- Transmission lines and transformer are drawn as series of line segments. Without holding down the mouse button drag the mouse up. Notice that a line segment connected to the point of origin will follow your mouse movement. To terminate a final line segment and conclude drawing line double click the left mouse at termination point.
- Enter your desire value of resistance and reactance values.

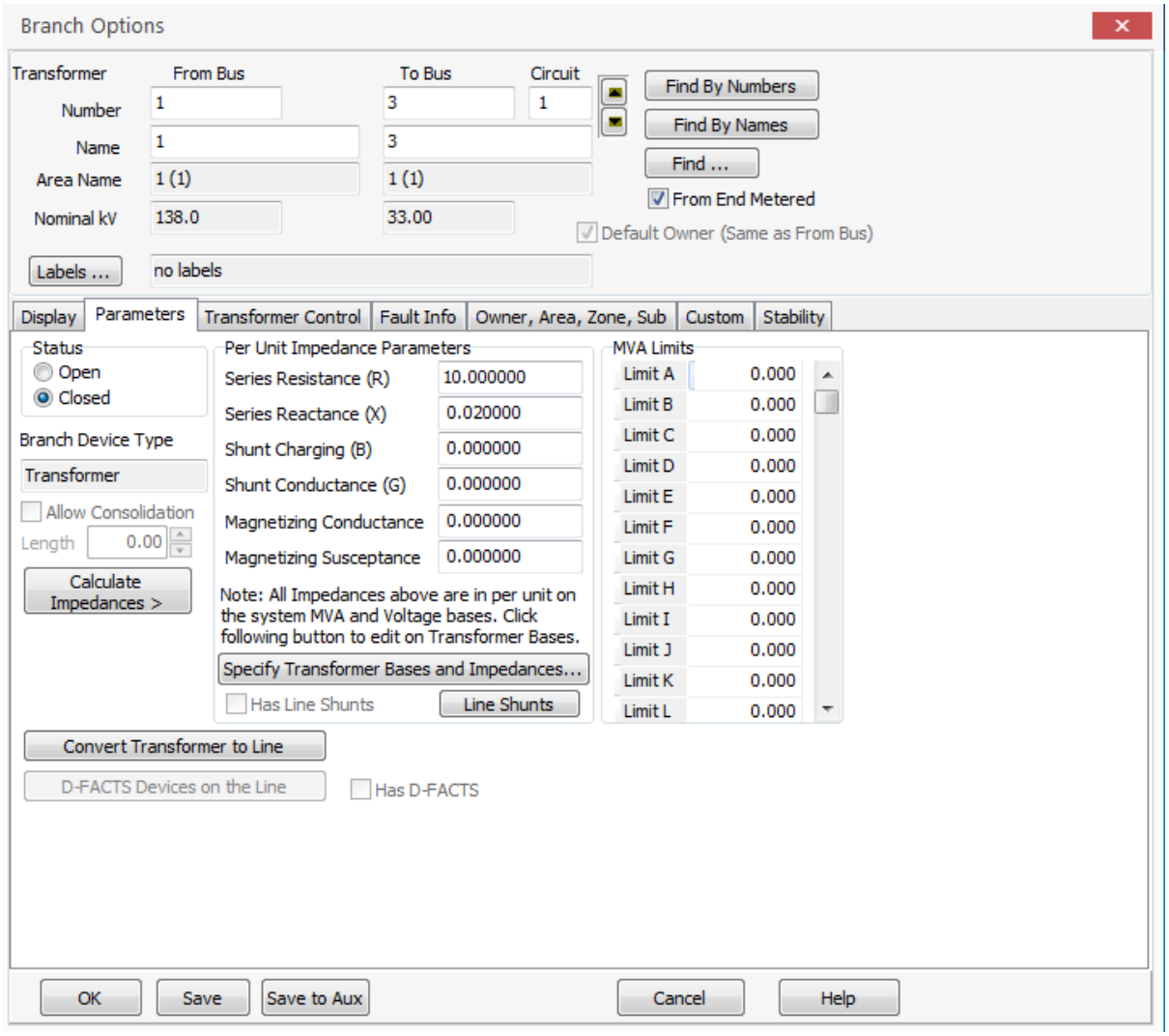


## Lab Task:

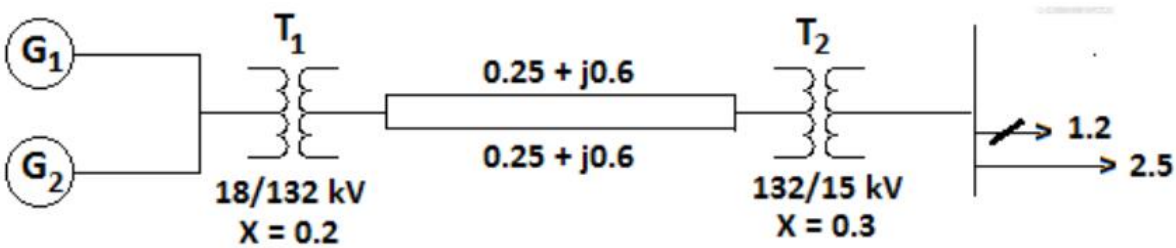


Generator 1 MW output: 30, -5 MVar

Generator 2 MW output: 35, -5 Mvar

Load 1: 25 M, Load 2: 20 MW and 5 Mvar

A power system on 100 MVA base is shown in fig. below; the generators real power, real and reactive loads, transformer reactance and transmission line parameters are all shown in per unit. Simulate the system using **Power World Simulator** and show the following quantities.

- Sending end voltage in per unit and in kV
- Receiving end voltage in per unit and in kV
- Y-bus

Note:

- Values of Impedance must be put in per unit system.

## Simulink Circuit:

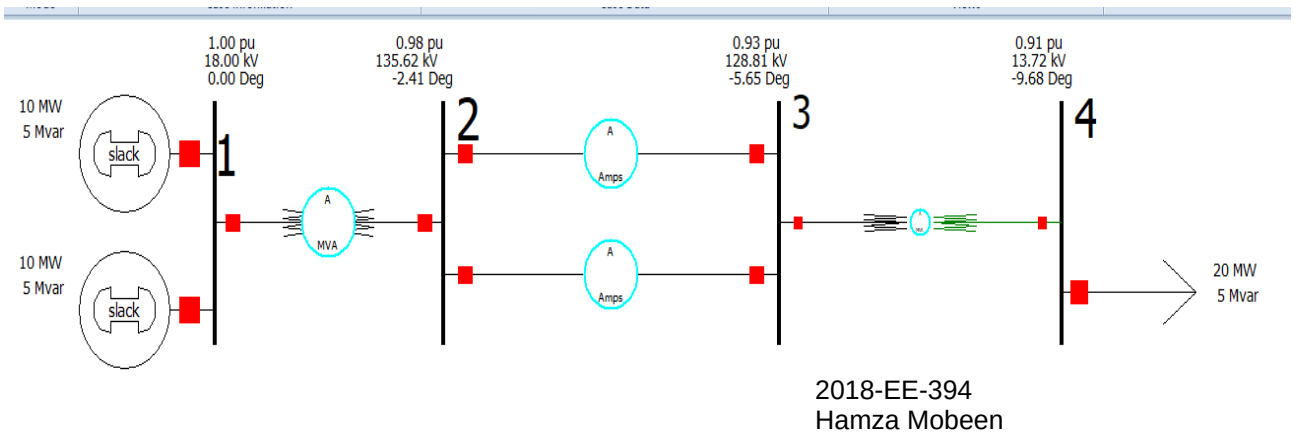


**Figure 7.1 circuit of task 1 power system**

## Run Mode of Circuit:

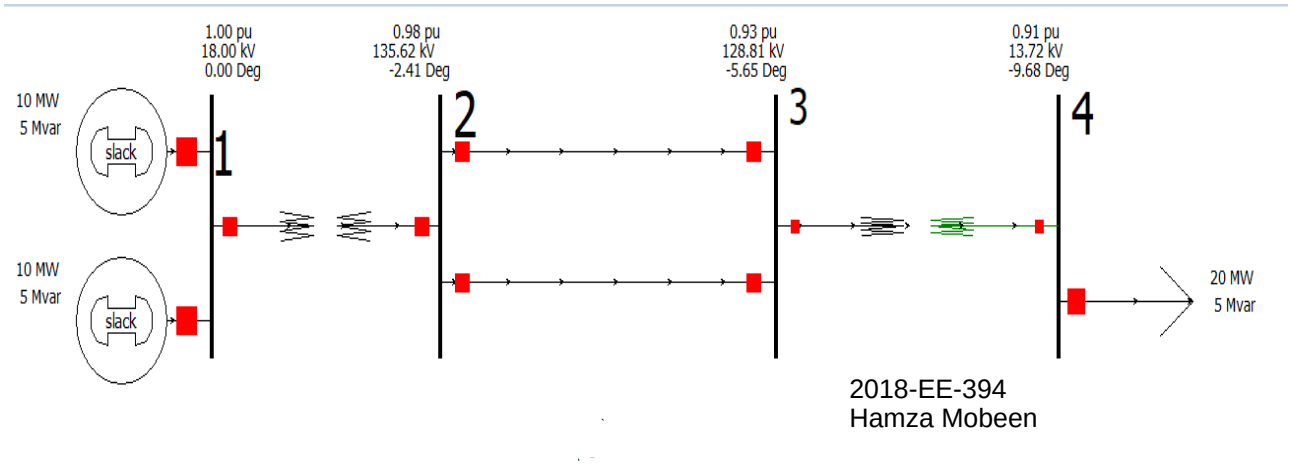


**Figure 7.2 Run mode of circuit power transmission direction**

## Buses record:

Bus Records

Records Geo Set Columns f(x) Options

Filter Advanced Bus Find... Remove Quick Filter...

| | Number | Name | Area Name | Nom kV | PU Volt | Volt (kV) | Angle (Deg) | Load MW | Load Mvar | Gen MW | Gen Mvar | Switched Shunts Mvar | Act G Shunt MW | Act B Shunt Mvar | Area Num |
|---|---|---|---|---|---|---|---|---|---|---|---|---|---|---|---|
| 1 | 1 | 1 | 1 | 18.00 | 1.00000 | 18.000 | 0.00 | | | 20.63 | 9.06 | | 0.00 | 0.00 | 1 |
| 2 | 2 | 2 | 1 | 138.00 | 0.98274 | 135.618 | -2.41 | | | | | | 0.00 | 0.00 | 1 |
| 3 | 3 | 3 | 1 | 138.00 | 0.93342 | 128.812 | -5.65 | | | | | | 0.00 | 0.00 | 1 |
| 4 | 4 | 4 | 1 | 15.00 | 0.91471 | 13.721 | -9.68 | 20.00 | 5.00 | | | | 0.00 | 0.00 | 1 |

**Figure 7.3 bus record of power system**

## Y bus record

Y Bus (Bus Admittance Matrix) Buses

Records Geo Set Columns f(x)

Filter Advanced Bus Find... Remove Quick Filter...

| | Number | Name | Bus 1 | Bus 2 | Bus 3 | Bus 4 |
|---|---|---|---|---|---|---|
| 1 | 1 | 1 | 0.00 - j5.00 | -0.00 + j5.00 | | |
| 2 | 2 | 2 | -0.00 + j5.00 | 1.18 - j7.84 | -1.18 + j2.84 | |
| 3 | 3 | 3 | | -1.18 + j2.84 | 1.18 - j6.17 | -0.00 + j3.33 |
| 4 | 4 | 4 | | | -0.00 + j3.33 | 0.00 - j3.33 |

**Figure 7.4 Y-bus of power system**

**Z bus:**

lab7_1.m | lab7_2.m

```
%2018-EE-394 Hamza Mobeen
%lab 7
%Task 1
Y=[-5j -0+5j 0 0; -0+5j 1.18-7.84j -1.18+2.84j 0; 0 -1.18+2.84j 1.18-6.17j -0+3.33j; 0 0 -0+3.33j 0-3.33j];
Z=inv(Y)
```

Command Window

```
Z =

  1.0e+15 *

  0.9759 + 1.6874i   0.9759 + 1.6874i   0.9759 + 1.6874i   0.9759 + 1.6874i
  0.9759 + 1.6874i   0.9759 + 1.6874i   0.9759 + 1.6874i   0.9759 + 1.6874i
  0.9759 + 1.6874i   0.9759 + 1.6874i   0.9759 + 1.6874i   0.9759 + 1.6874i
  0.9759 + 1.6874i   0.9759 + 1.6874i   0.9759 + 1.6874i   0.9759 + 1.6874i

fx >>
```

**Figure 7.5 Z-bus of power system**

## Part b:

Determine the amount of shunt compensation at the receiving end such that the receiving end voltage remains within 0.99 to 1.01 per unit

Fig. below shows the one-line diagram of a simple three-bus power system with generation at bus 1.

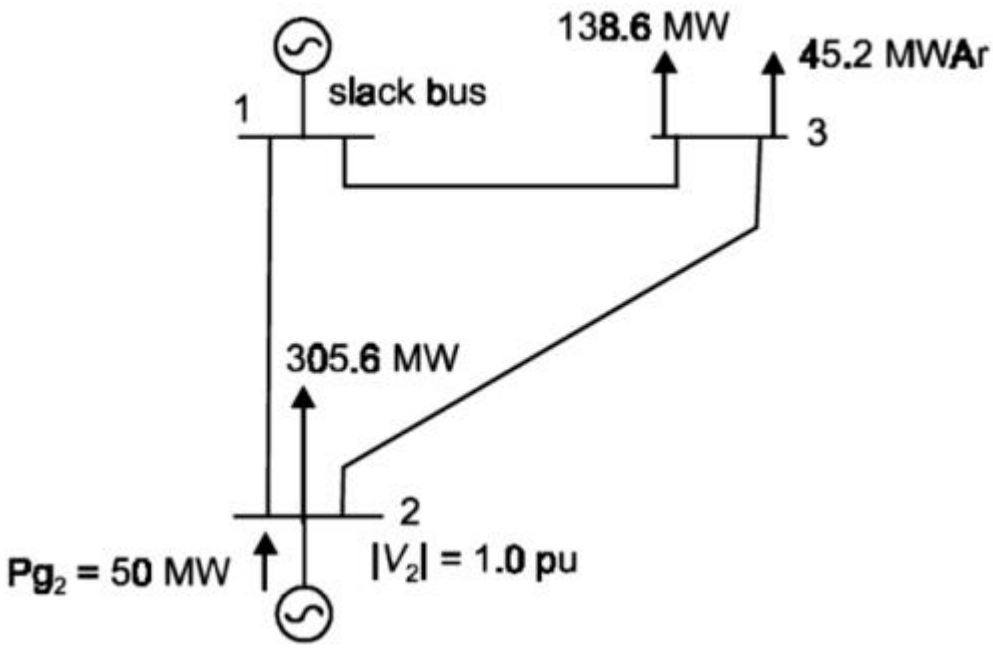


**Table 1** Scheduled generation and loads and assumed bus voltage for sample power system

| Bus code $i$ | Assumed bus voltage | Generation MW | Generation MVAr | Load MW | Load MVAr |
|---|---|---|---|---|---|
| 1 (slack bus) | 1.05 + $j$0.0 | – | – | 0 | 0 |
| 2 | 1 + $j$0.0 | 50 | 30 | 305.6 | 140.2 |
| 3 | 1 + $j$0.0 | 0.0 | 0.0 | 138.6 | 45.2 |

Base MVA = 100

**Table 2** Line impedances

| Bus code $i - k$ | Impedance $Z_{ik}$ |
|---|---|
| 1-2 | 0.02 + $j$0.04 |
| 1-3 | 0.01 + $j$0.03 |
| 2-3 | 0.0125 + $j$0.025 |

## Simulink circuit:

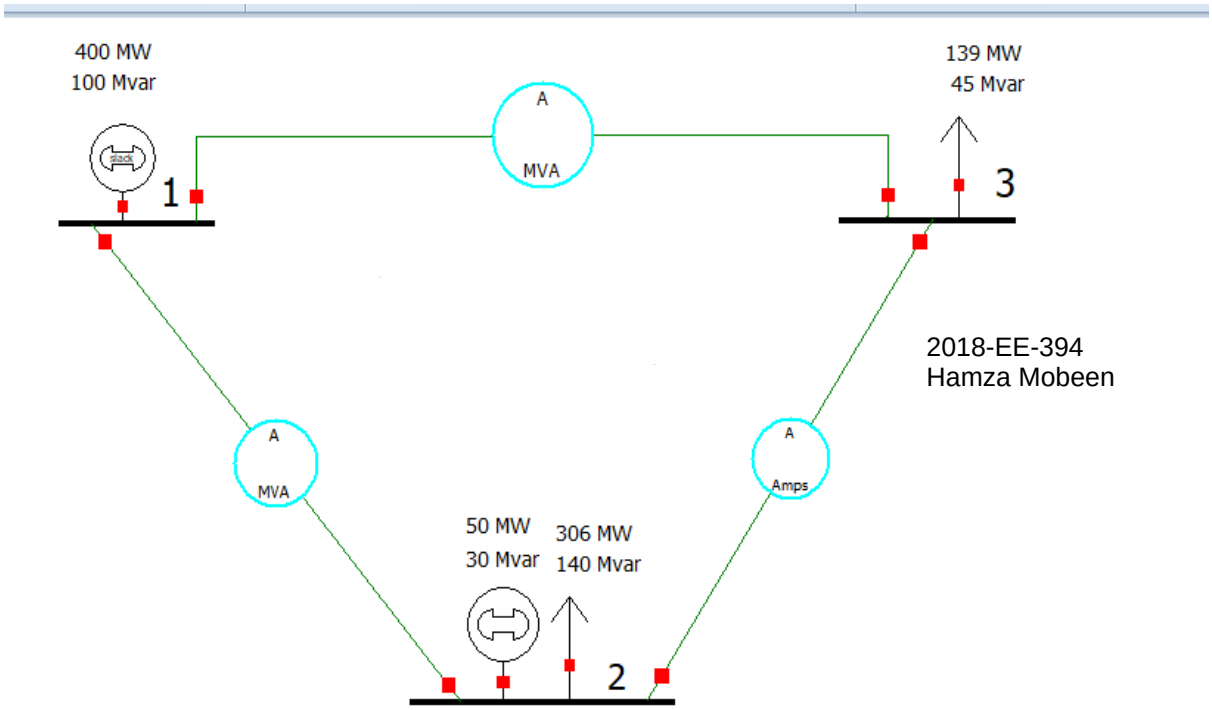


**Figure 7.6 power system circuit**

## Run mode:

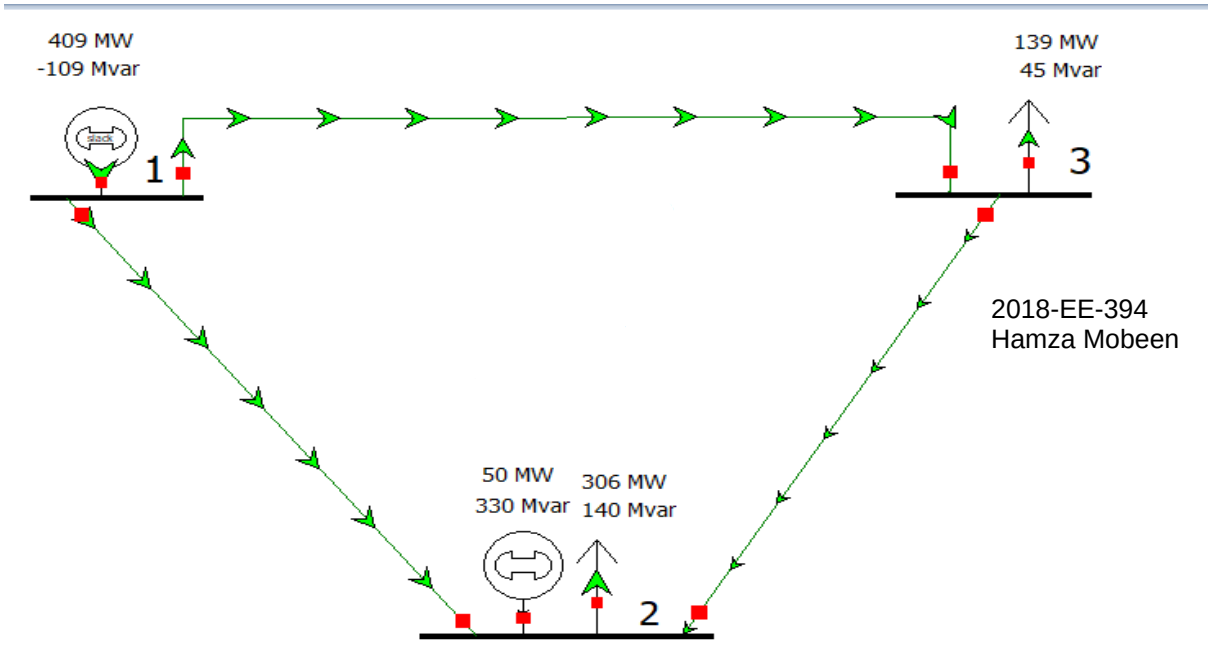


**Figure 7.7 run mode of circuit power transmission direction**

## Buses record:

X Bus Records X Ybus

Records Geo Set Columns Options

Filter Advanced Bus Find... Remove Quick Filter...

| | Number | Name | Area Name | Nom kV | PU Volt | Volt (kV) | Angle (Deg) | Load MW | Load Mvar | Gen MW | Gen Mvar | Switched Shunts Mvar | Act G Shunt MW | Act B Shunt Mvar | Area Num |
|---|---|---|---|---|---|---|---|---|---|---|---|---|---|---|---|
| 1 | 1 | 1 | 1 | 1.05 | 1.00000 | 1.050 | 0.00 | | | 445.23 | -113.36 | | 0.00 | 0.00 | 1 |
| 2 | 2 | 2 | 1 | 1.00 | 1.00000 | 1.000 | -5.79 | 305.60 | 140.20 | 50.00 | 339.16 | | 0.00 | 0.00 | 1 |
| 3 | 3 | 3 | 1 | 1.00 | 0.98573 | 0.986 | -4.29 | 172.30 | 45.20 | | | | 0.00 | 0.00 | 1 |

**Figure 7.8 bus record of power system**

## Y bus record

X Y Bus (Bus Admittance Matrix) X Buses

Records Geo Set Columns

Filter Advanced Bus Find... Remove Quick F

| | Number | Name | Bus 1 | Bus 2 | Bus 3 |
|---|---|---|---|---|---|
| 1 | 1 | 1 | 20.00 - j50.00 | -10.00 + j20.00 | -10.00 + j30.00 |
| 2 | 2 | 2 | -10.00 + j20.00 | 26.00 - j52.00 | -16.00 + j32.00 |
| 3 | 3 | 3 | -10.00 + j30.00 | -16.00 + j32.00 | 26.00 - j62.00 |

**Figure 7.9 Ybus of power system circuit**

**Z bus:**

lab7_1.m lab7_2.m

```
%2018-EE-394 Hamza Mobeen
%lab 7
%Task 2
Y=[20-50j -10+20j -10+30j; -10+20j 26-52j -16+32j; -10+30j -16+32j 26-62j];
Z=inv(Y)
```

Command Window

```
Z =

   1.0e+14 *

  -0.4007 - 1.2822i  -0.4007 - 1.2822i  -0.4007 - 1.2822i
  -0.4007 - 1.2822i  -0.4007 - 1.2822i  -0.4007 - 1.2822i
  -0.4007 - 1.2822i  -0.4007 - 1.2822i  -0.4007 - 1.2822i

>>
```

**Figure 7.10 Z bus of power system**

**Conclusion:**

In this lab we observed the working in software of power world simulator we can create the circuit and edit it in edit mode approximately all the useful components are present in Draw➔Network and in run mode we can observed the power flow of the circuit We learnt the fundamental tools of the programmed, such as putting generators, buses, loads, and transmission lines into the system, as well as the specifics of the parameters. We received a straight solution for the Y bus from the system and a solution for the Z bus from MATLAB.

| | |
|---|---|
| **Name** | **Hamza Mobeen** |
| **Reg. #** | **2018-EE-394** |
| **Date** | **6/2/2021** |
| **Marks** | |

# EXPERIMENT # 08

## To apply Shunt Capacitive Compensation in a Transmission lines

### Objective:

To learn the importance of Shunt Compensation by simulating a single phase and three phase medium length transmission line with different loads on MATLAB Simulink and PWS.

### Theory:

During power transmission, there will be problems like poor voltage regulation and power factor, poor efficiency and less reliability shunt capacitive compensation is a method to avoid these problems by using this we could get better power factor. Most of the power systems are loaded with an inductive load to compensate the inductive load shut capacitor will be applied to the load. This type of compensation could be done to substation level or the transmission level

The advantages of shunt capacitive compensations are

• Transmission power loss is decreased by reducing reactive current

• More capacity is available to supply the power to the load

• Better regulation due to less voltage drop

• Due to less loading, the life of power system equipment increased

• It could achieve peak load demand

• There will be reduced stress for generator excitation system

• Source generator's power factor increased

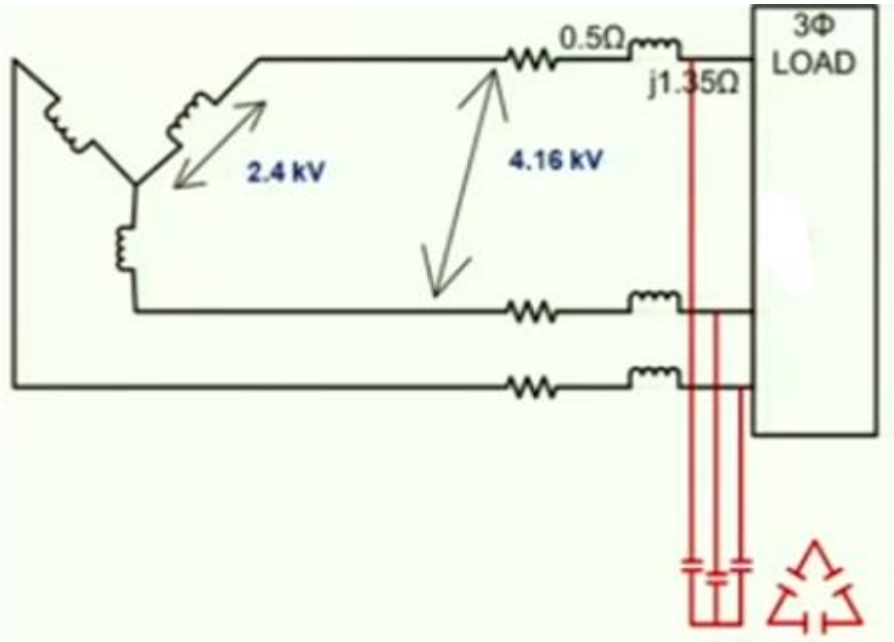


Figure 1: Three Phase Transmission lines with Shunt Capacitor

**OPERATION**

If an inductive load is connected to a transmission line the power factor lags and it is because of the lagging of the load current as a solution for this problem a shunt capacitor is connected which draws the current leading the source voltage and the result will be better power factor

Low power factor causes low voltage regulation the capacitor causes the current to lead the voltage the inductive resistance of the system will be cancelled by the capacitive reactance it will be good to use a capacitor bank instead of a single capacitor

Capacitor can't be installed for small loads instead of that it could be connected to medium and large loads so it is difficult to connect capacitor at each load instead of that it will be connected to main distribution substation or secondary grid substation.

**Procedure:**

- Start MATLAB and go to start Simulink > Simpower system > Block Library.
- Open new file by clicking file new model or pressing ctrl+ n.
- Take Voltmeter and Ammeter from measurement section of Block Library.
- Take AC Voltage source from source section.
- Take RLC Load and branch, ground node, PI section line from element section.
- Also take Power GUI from block library simpower system in your file.
- Make connection as shown in figure.
- Calculate voltage regulation using formula.
- Now apply shunt capacitor at receiving end and see variation in voltage and current and their phase difference.
- Change value of capacitor and find trend variation in voltage, current and power factor.

- Repeat this system for different values of loads and capacitor values draw table and also draw graph for different values.

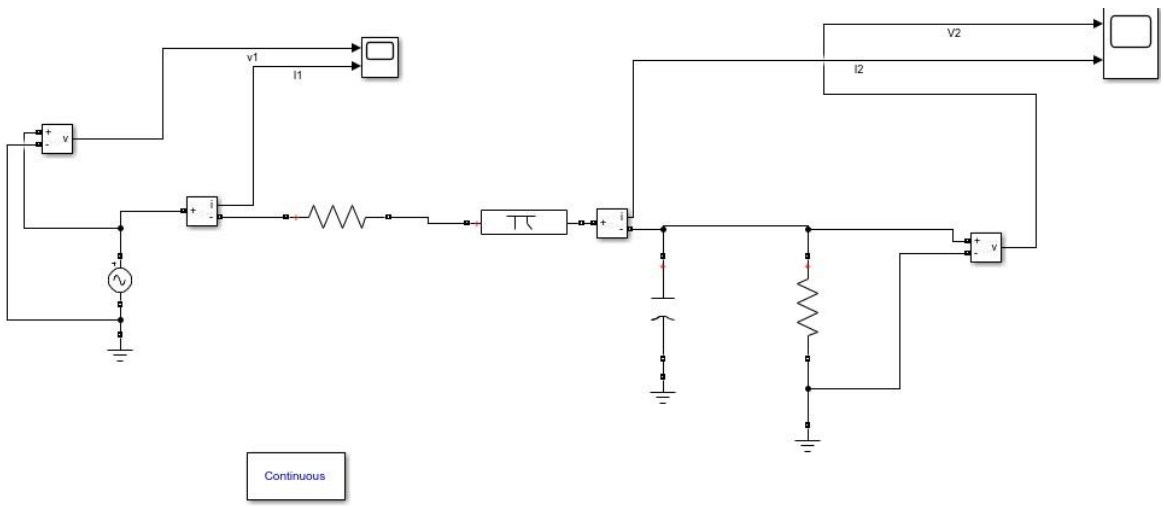


Figure 2: MATLAB setup of transmission lines

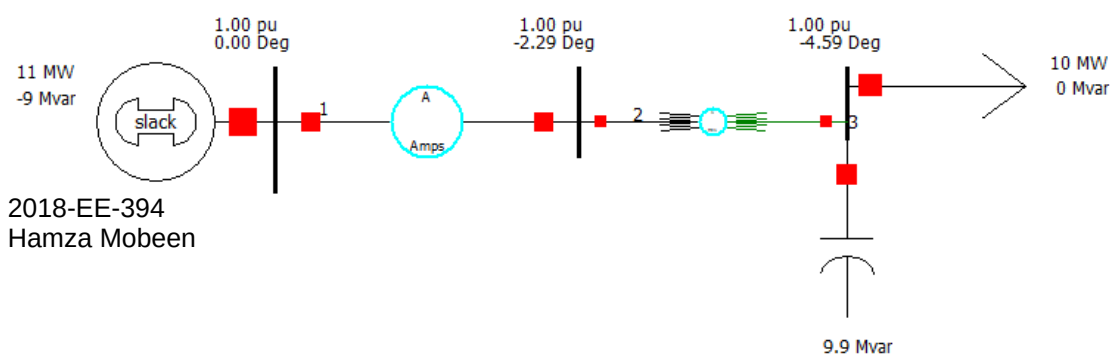


Figure 3: Transmission line setup with shunt Capacitor in PWS

Three types of loads should be simulated for each T.L model.

- Pure resistive load
- Capacitive Load

**Tasks1:**

**Simulation is done in single phase system and draw tables and graphs.**

**Simulation without shunt capacitor:**

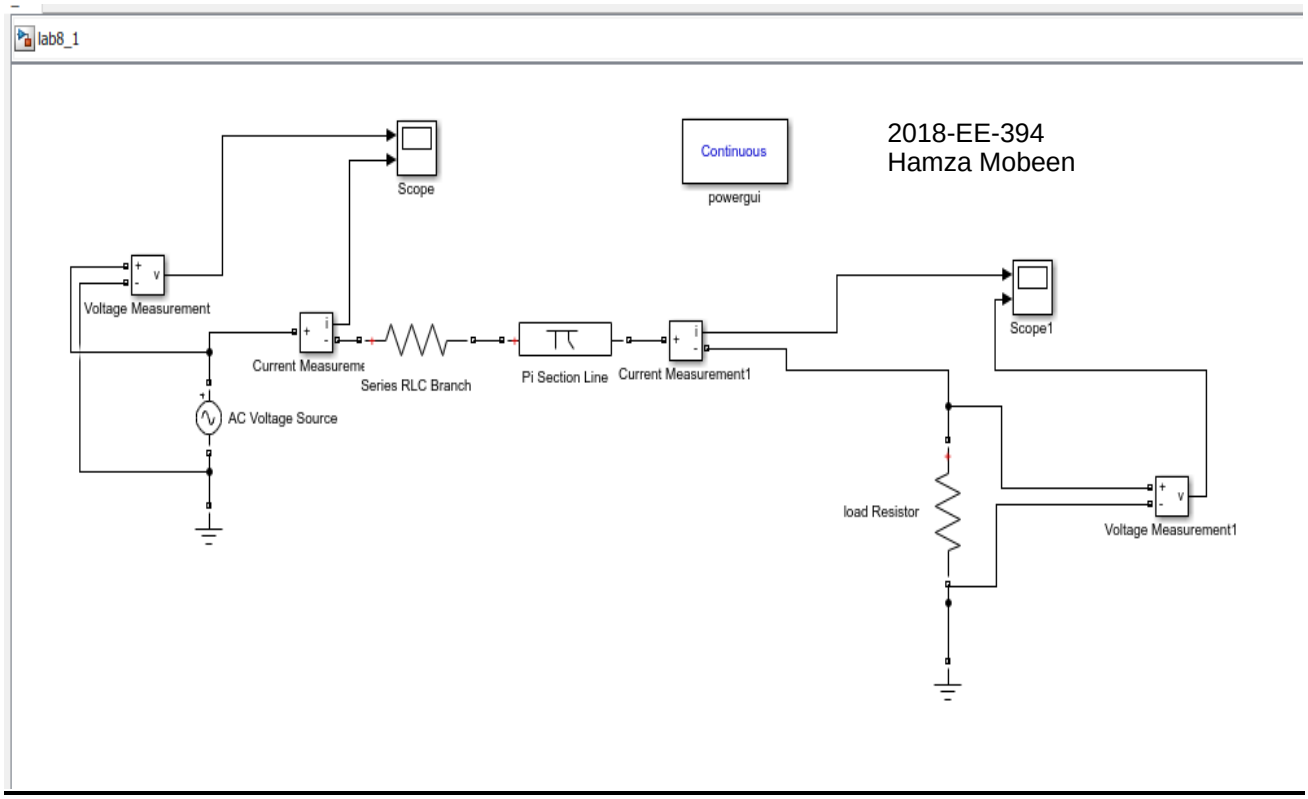


**Figure 8.1 Simulink without capacitor**

**Input current and voltage:**

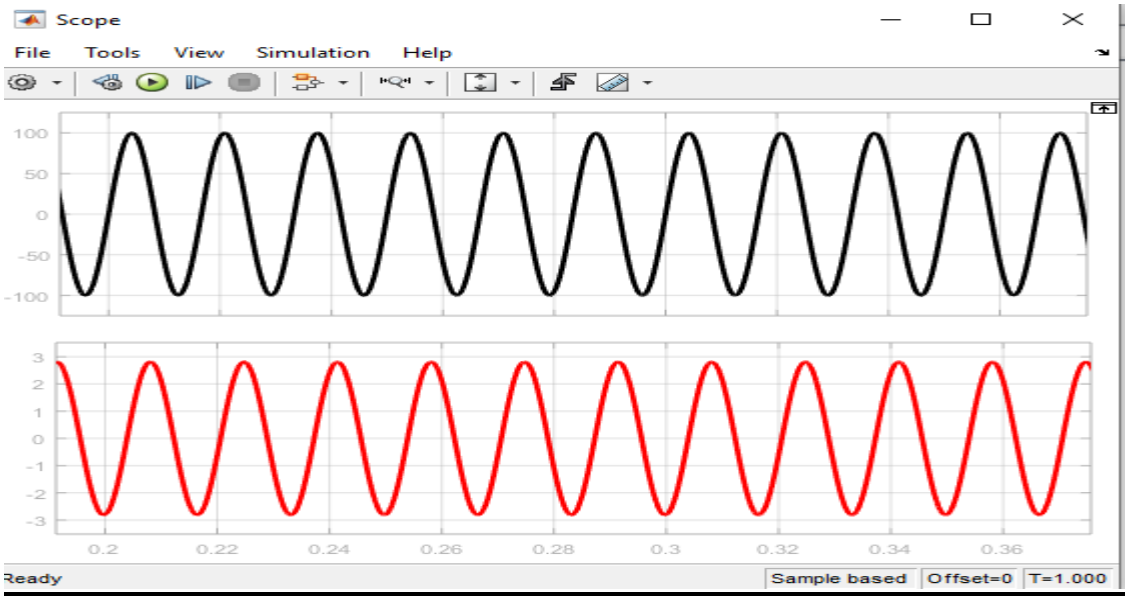


**Figure 8.2 input current and voltage of Simulink**

**Load Resistance =1Ω:**

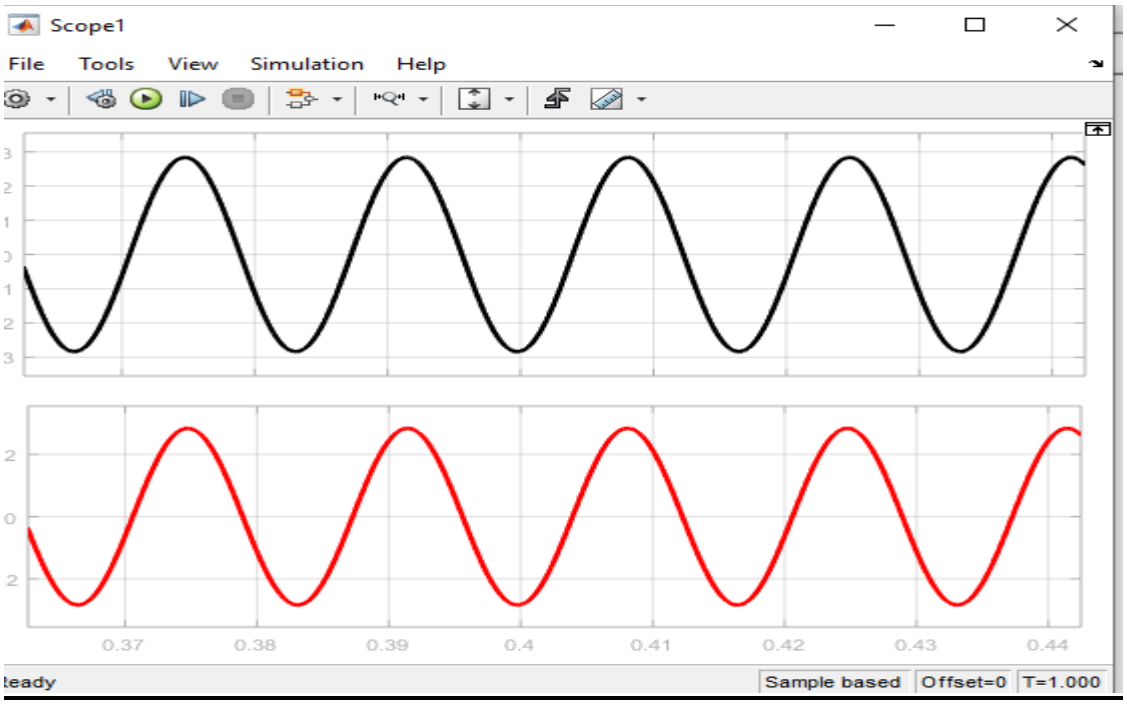


**Figure 8.3 output current and voltage graph at R=1Ω**

**Resistance =10Ω**

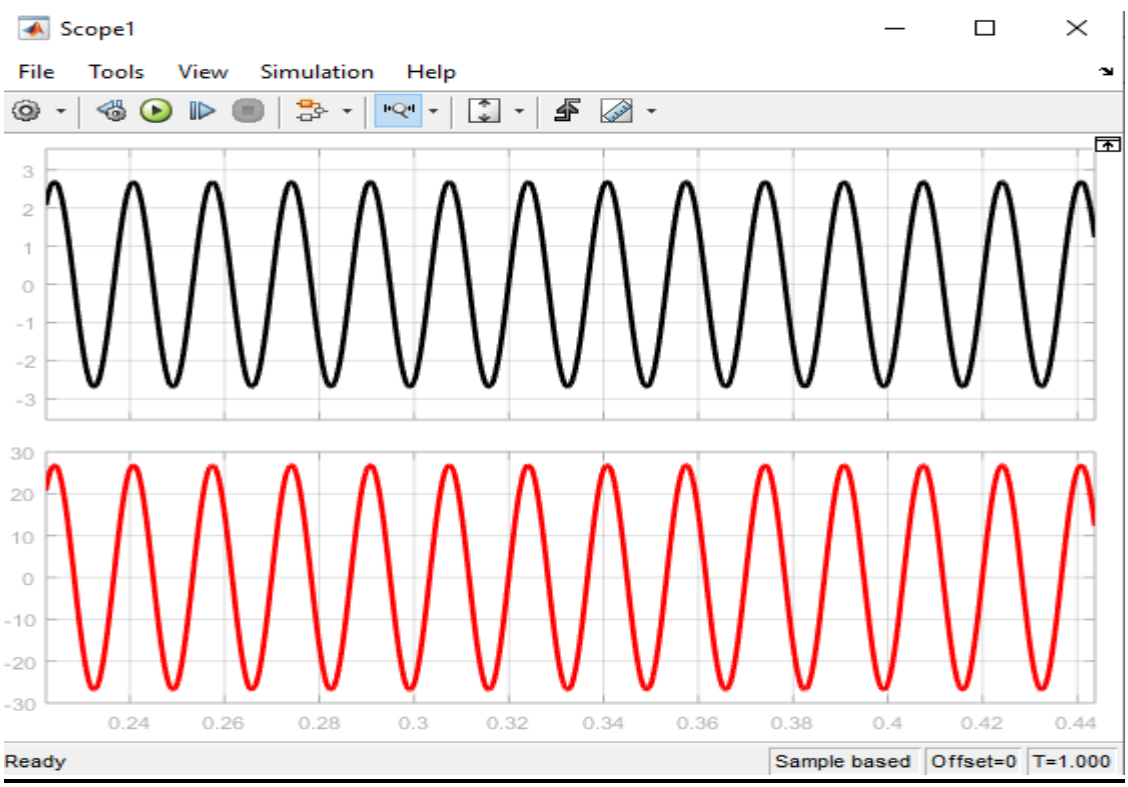


**Figure 8.4 output current and voltage at resistance=10Ω**

**Resistance=100Ω**

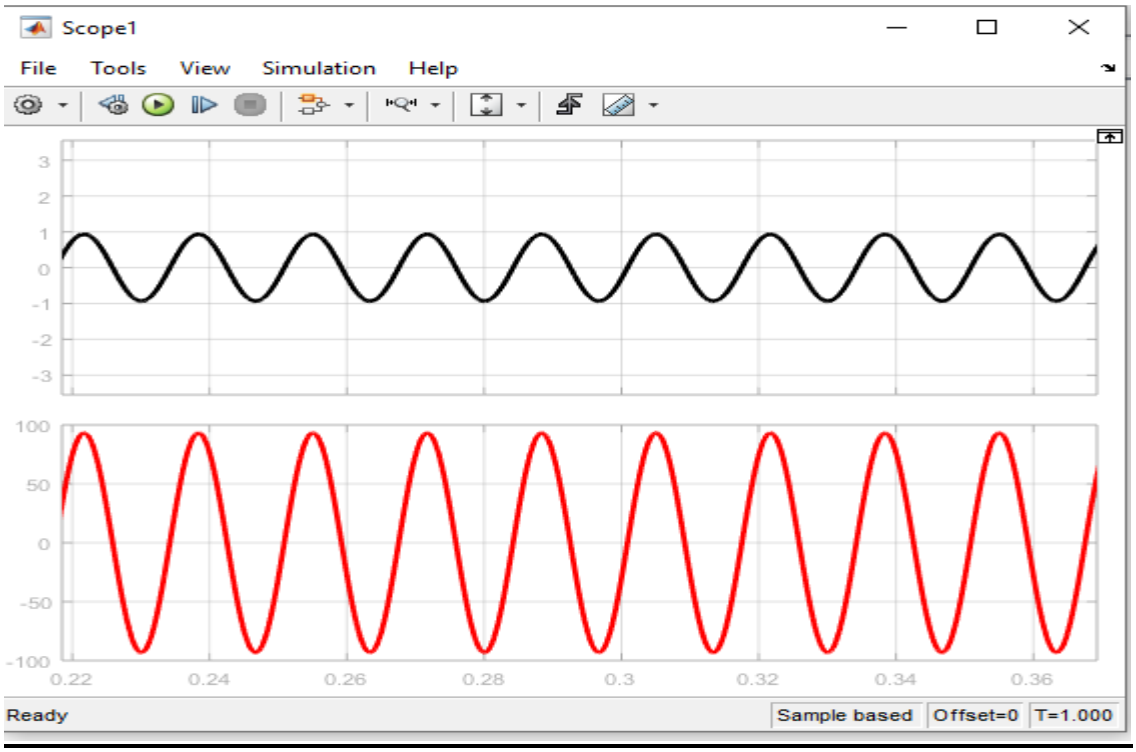


**Figure 8.5 output current and voltage at resistance=100Ω**

**For resistance Load:**

| Load resistance | Input current | Input Voltage | Output current | Output Voltage |
|---|---|---|---|---|
| 1Ω | 2.81<-84.67 | 100<0 | 2.84<-84.71 | 2.84<-84.71 |
| 10 Ω | 2.67<-70.58 | 100<0 | 2.69<-70.88 | 26.91<-70.88 |
| 100 Ω | 0.92<-16.35 | 100<0 | 0.93<-19.13 | 93.16<-19.13 |

**Simulink with shunt capacitor:**

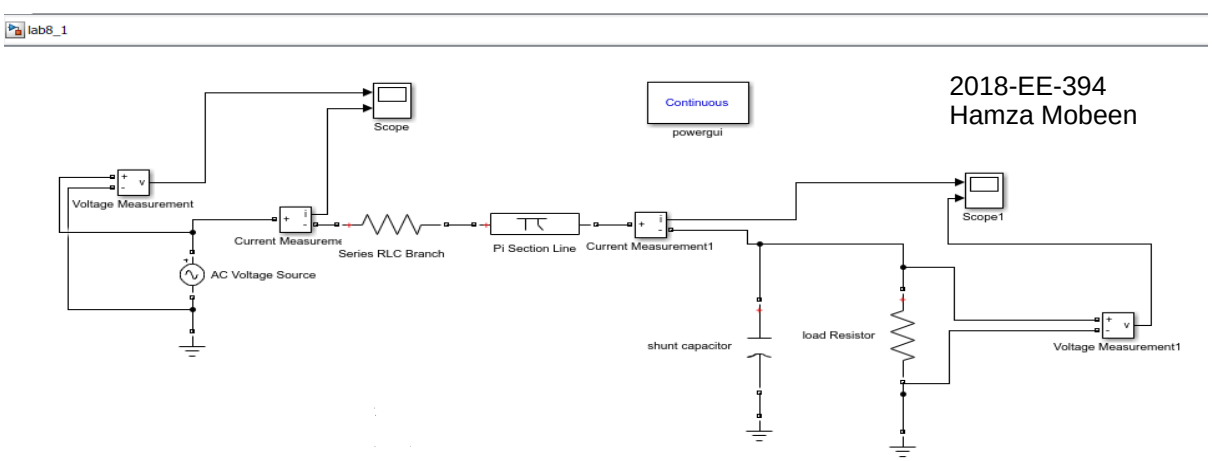


**Figure 8.6 Simulink with shunt capacitor**

**Capacitor 100µ and Resistance 1Ω:**

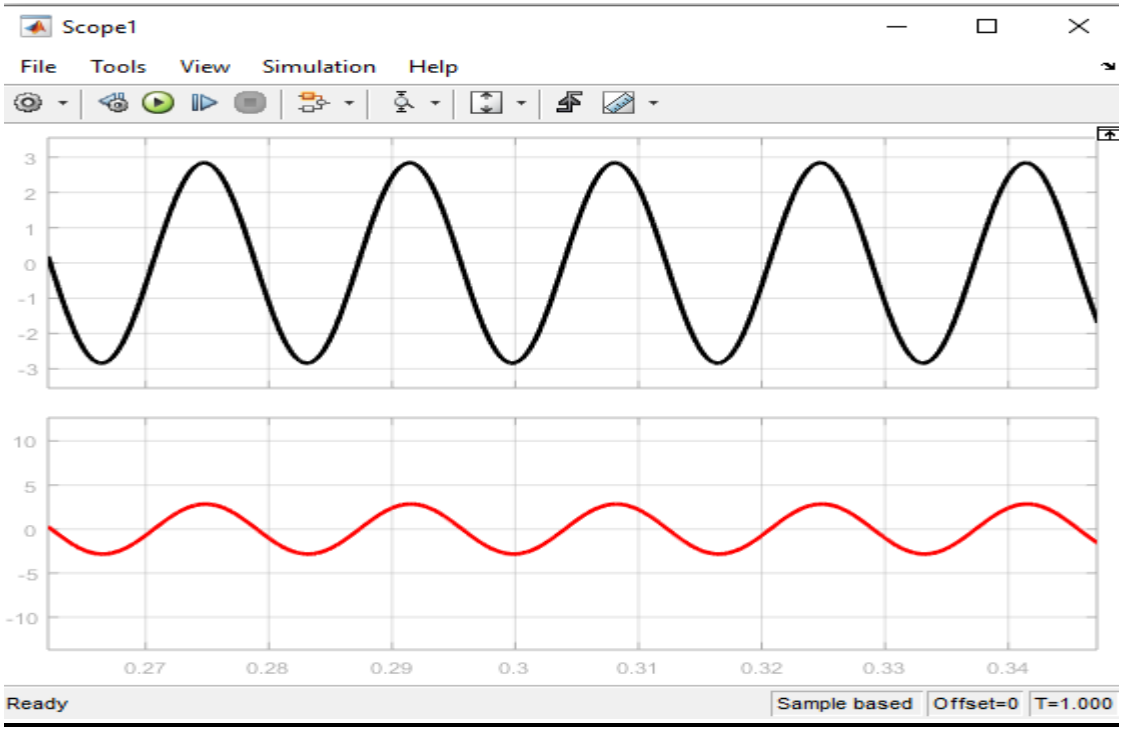


**Figure 8.7 output current and voltage at resistance=1Ω and shunt capacitor 100µ**

**Capacitor 150µ and Resistance 10Ω:**

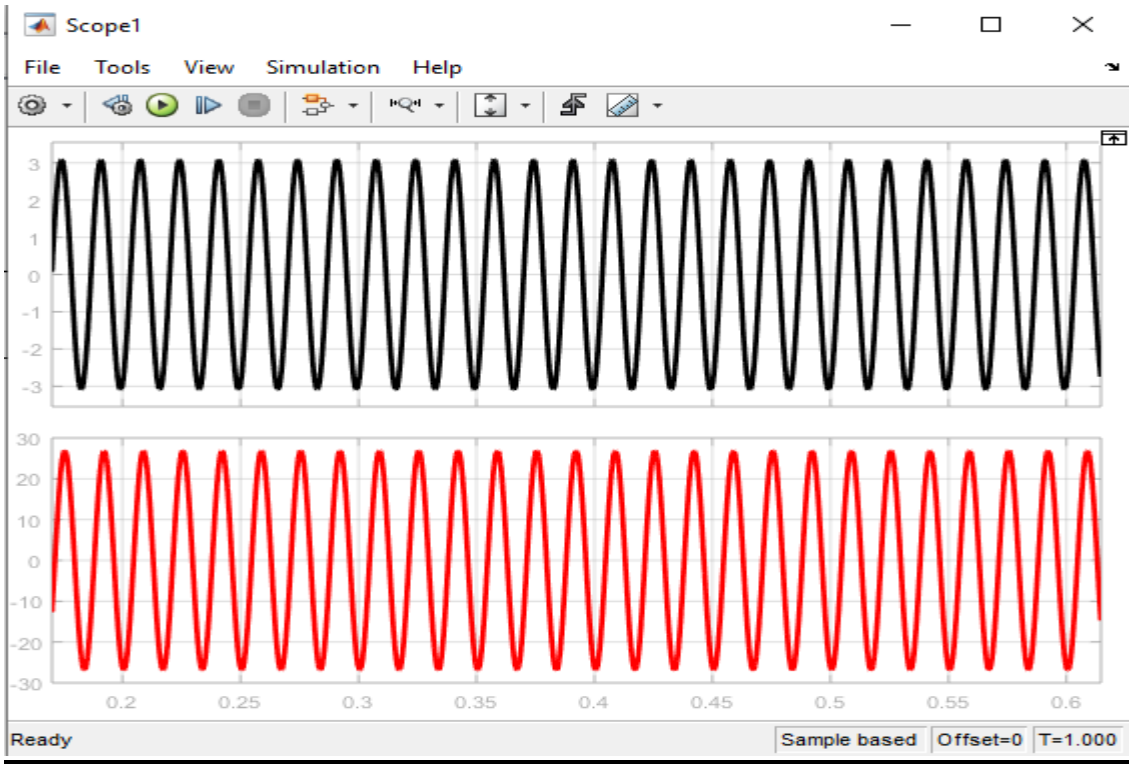


**Figure 8.8 output current and voltage at resistance=10Ω and shunt capacitor 150µ**

**Capacitor 250µ and Resistor 100Ω**

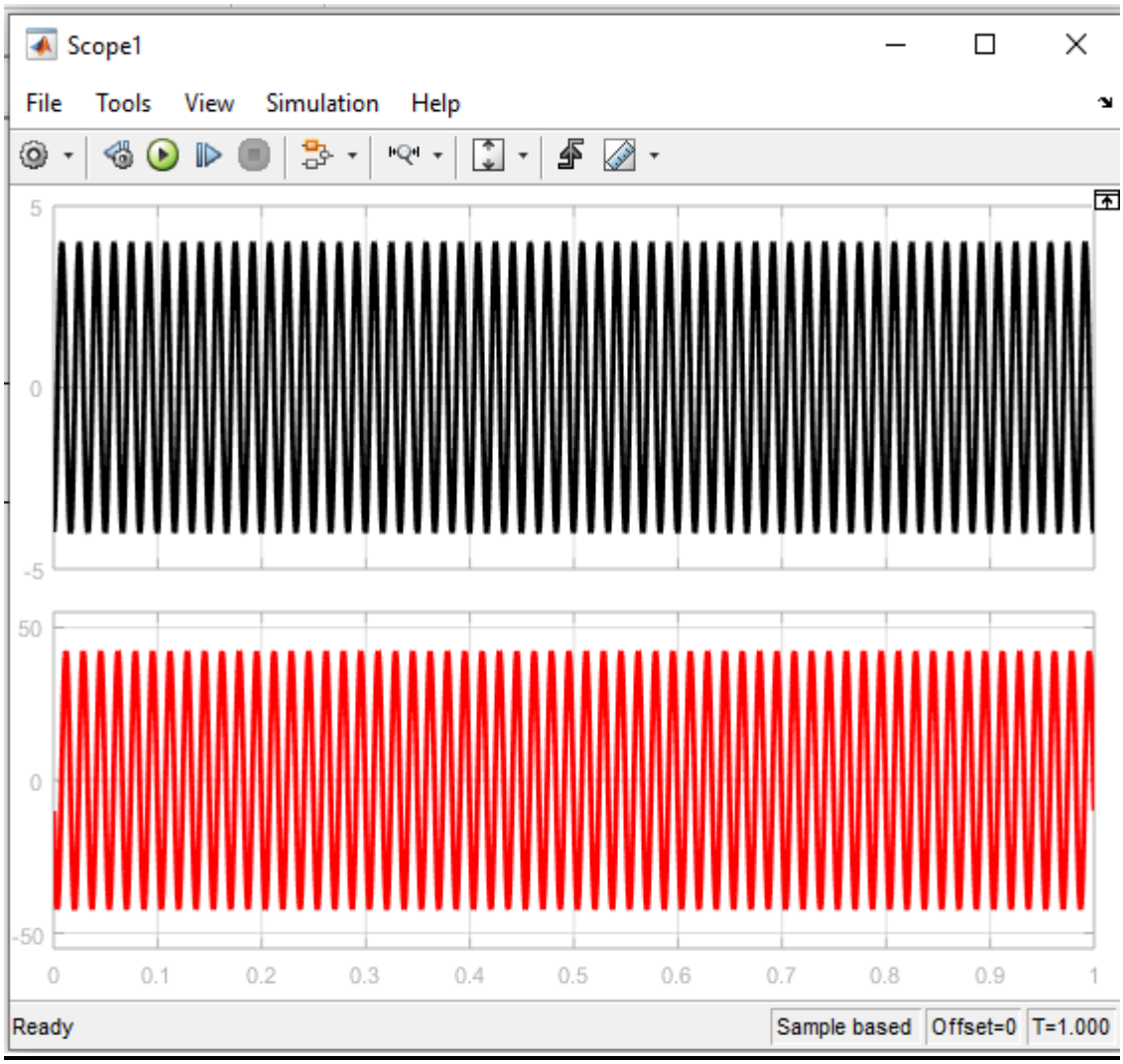


**Figure 8.9 output current and voltage at resistance=100Ω and shunt capacitor 250µ**

**For shunt capacitor and resistor load:**

| Resistor | capacitor | Input current | Input voltage | Output current | Output voltage |
|---|---|---|---|---|---|
| 1Ω | 100µ | 2.82<-84.66 | 100<0 | 2.84<-84.71 | 2.84<-86.87 |
| 10Ω | 150µ | 3.07<-72.20 | 100<0 | 3.09<-72.43 | 26.89<-101.91 |
| 100Ω | 250µ | 3.20<-75.85 | 100<0 | 3.22<-76.01 | 23.42<-119.32 |

**Task 2**

**Simulation is done in three phase system and draw tables and graphs.**

**Simulink:**

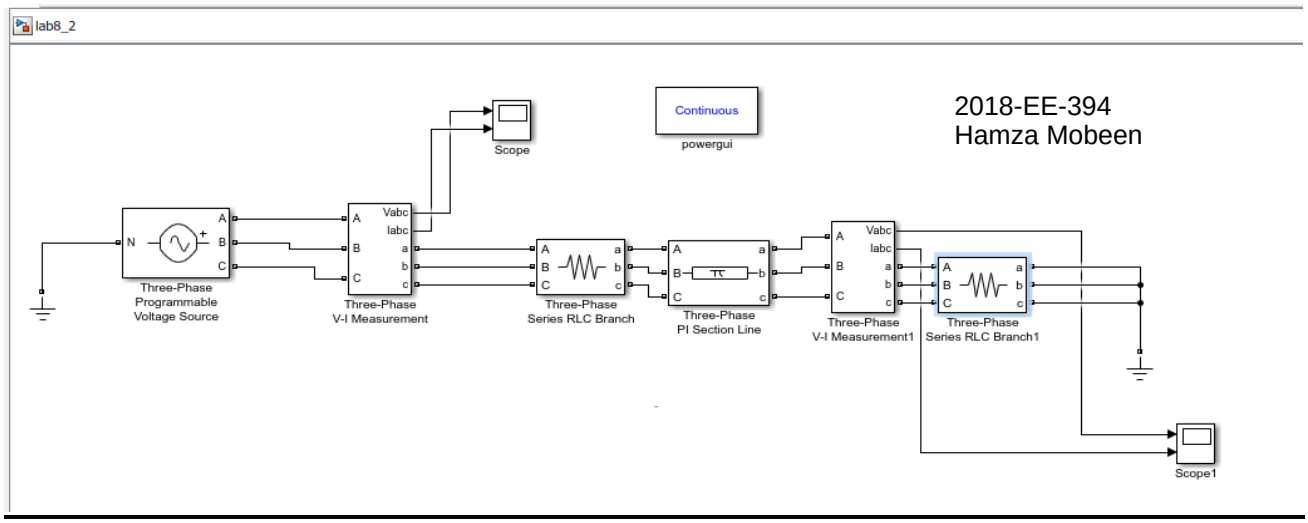


**Figure 8.10 Simulink of three phase with load resistance**

**Input current and voltage:**

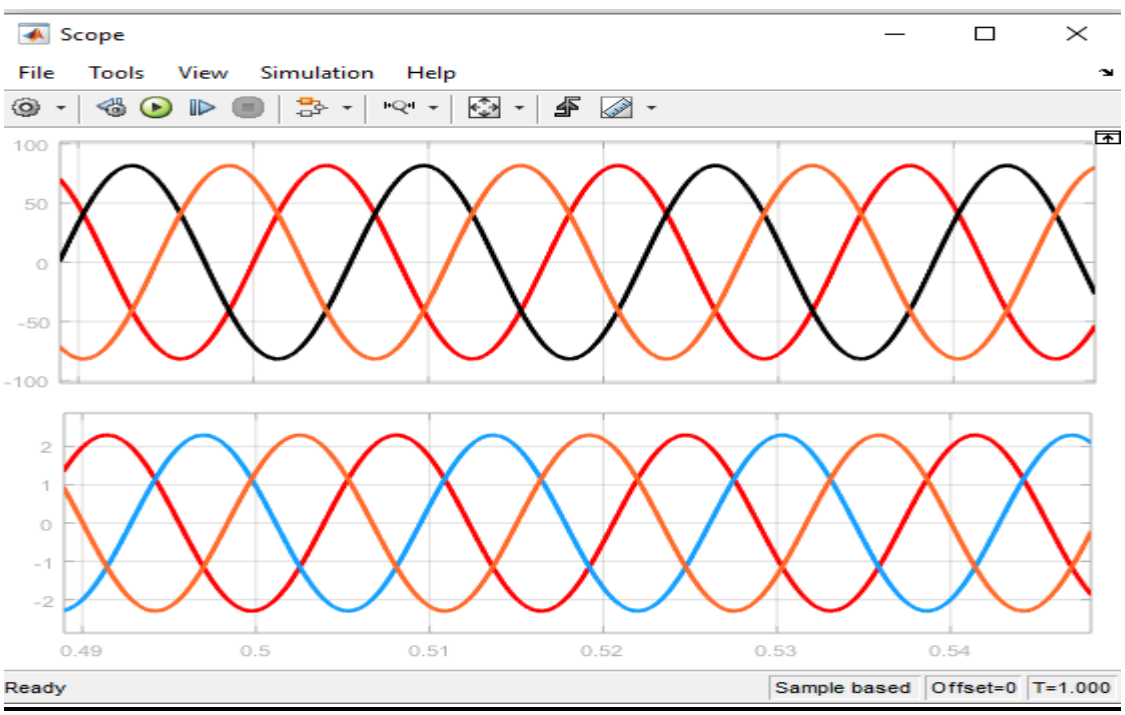


**Figure 8.11 input voltage and current of Simulink**

**Resistance =1Ω**

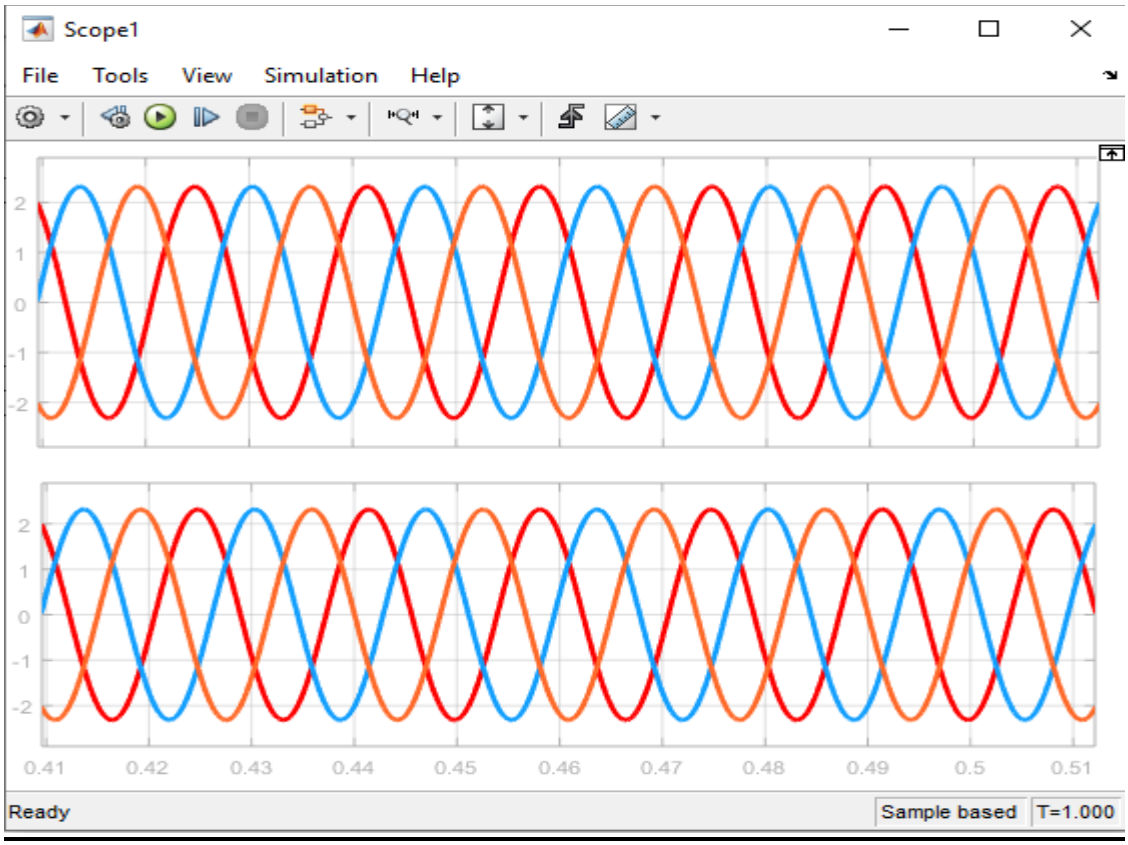


**Figure 8.12 output current and voltage with resistance 1Ω**

**Resistance 10Ω**

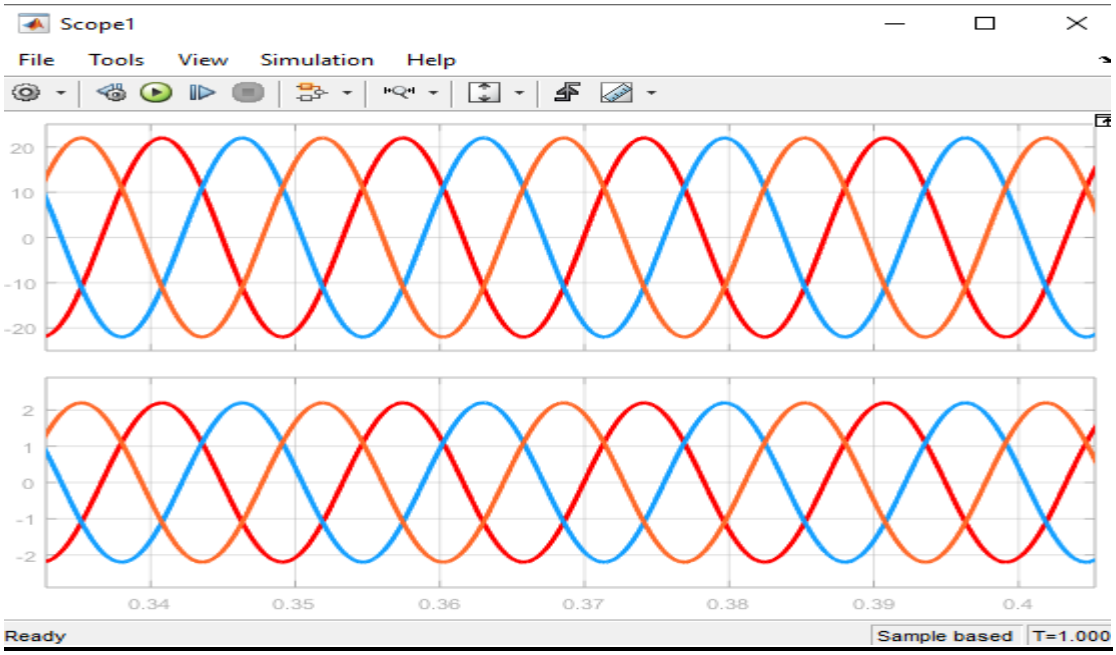


**Figure 8.13 output current and voltage with resistance 10Ω**

**Resistance 100Ω:**

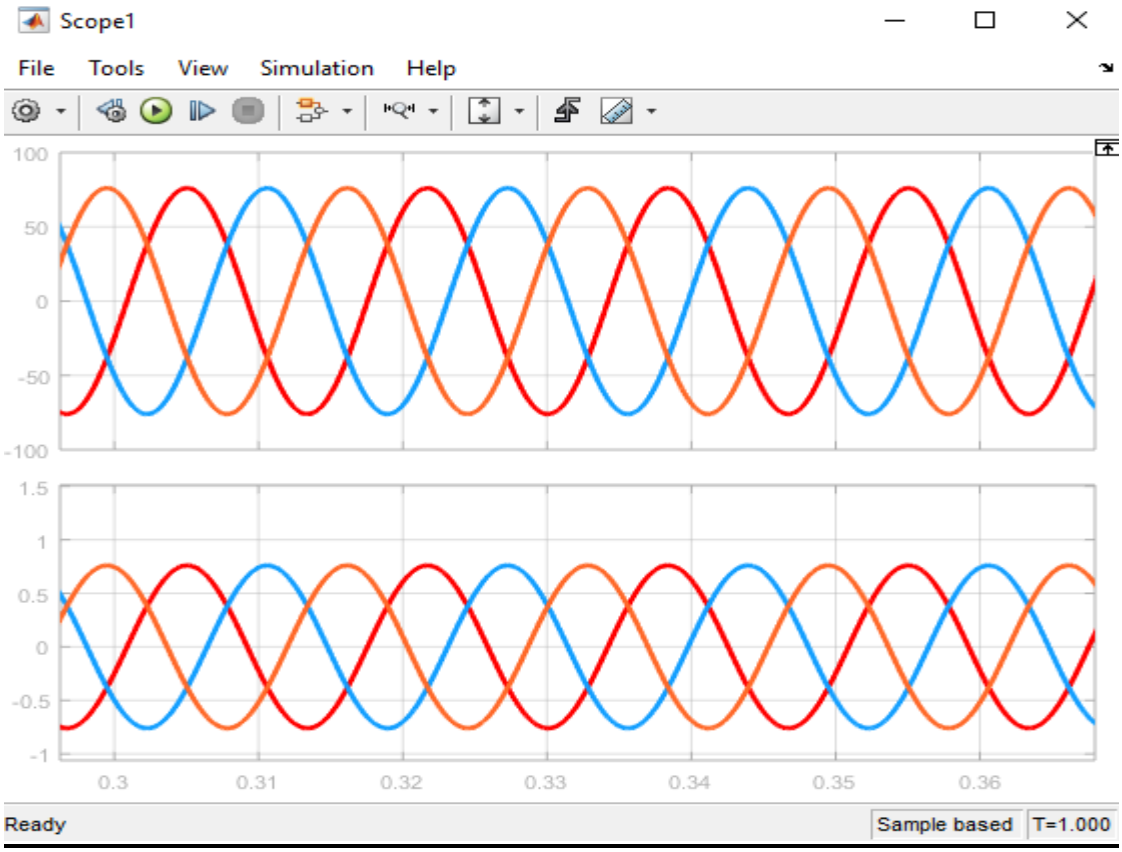


**Figure 8.14 output current and voltage with resistance 100Ω**

**For resistance three phase load:**

| Load resistance | Input current | Input voltage | Output current | Output voltage |
|---|---|---|---|---|
| 1Ω | A=2.3-<-84.67<br>B=2.30<155.33<br>C=2.30<35.33 | A=81.65<0<br>B=81.65<-120<br>C=81.65<120 | A=2.32<84.71<br>B=2.32<155.29<br>C=2.32<35.29 | A=2.32<-84.71<br>B=2.32<155.29<br>C=2.32<35.29 |
| 10Ω | A=2.18-<-70.58<br>B=2.18<169.42<br>C=2,18<49.42 | A=81.65<0<br>B=81.65<-120<br>C=81.65<120 | A=2.20<-70.88<br>B=2.20<169.12<br>C=2.20<49.42 | A=21.97<-70.88<br>B=21.97<169.12<br>C=21.97<49.12 |
| 100Ω | A=0.76<-16.35<br>B=0.76<-136.35<br>C=0.76<103.65 | A=81.65<0<br>B=81.65<-120<br>C=81.65<120 | A=76.07<-19.13<br>B=76.07<-139.13<br>C=76.07<100.87 | A=0.76<-19.13<br>B=0.76<-139.13<br>C=0.76<100.87 |

**With capacitor and resistance:**

**Simulink:**

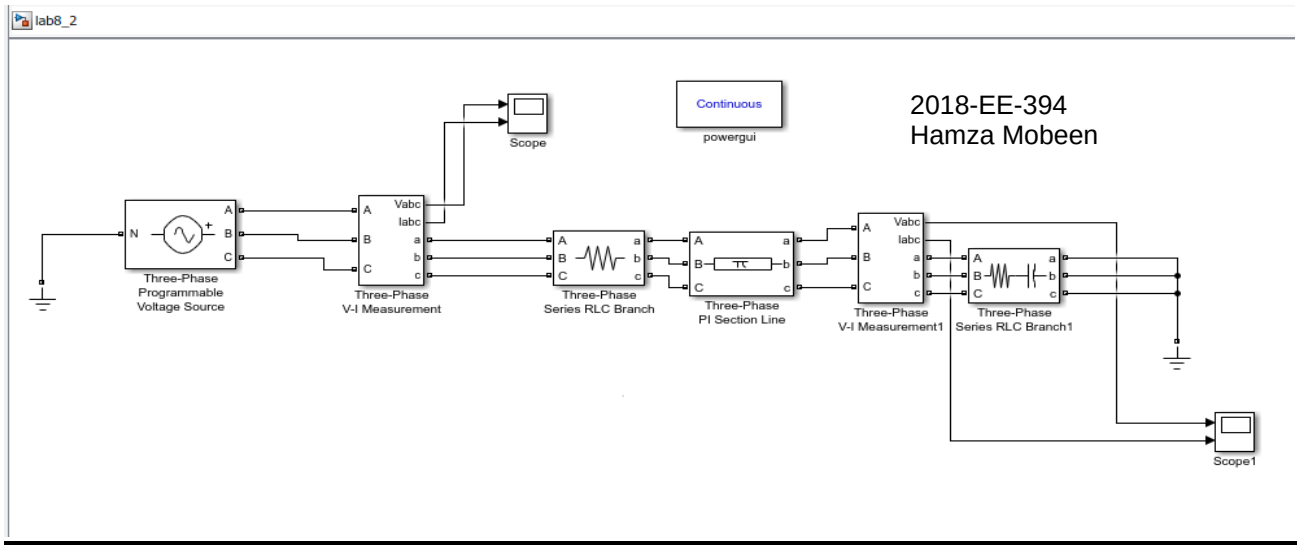


**Figure 8.15 Simulink of three phase with capacitor and resistor**

**Resistor 1Ω and capacitor 100µ:**

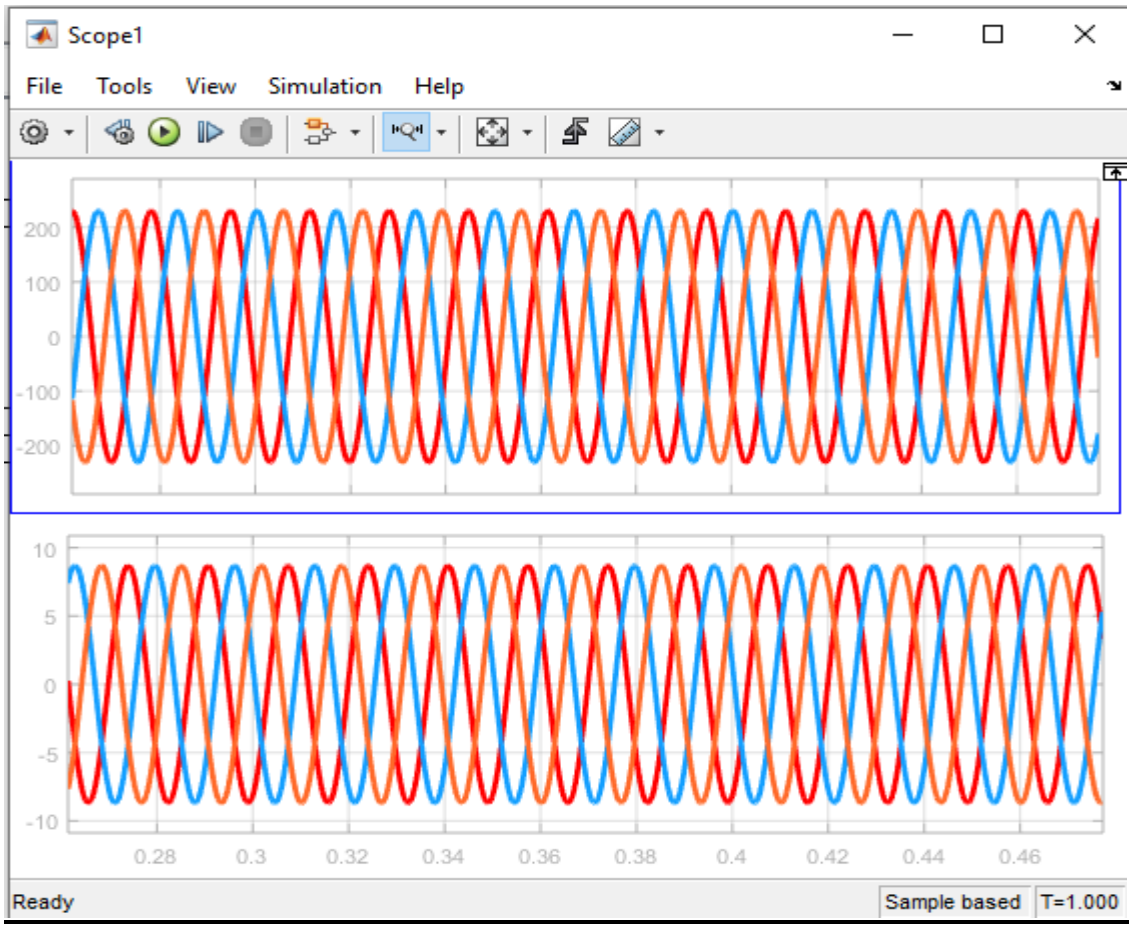


**8.16 output current and voltage with Resistor 1Ω and capacitor 100µ**

**Resistor 10Ω and capacitor 150µ:**

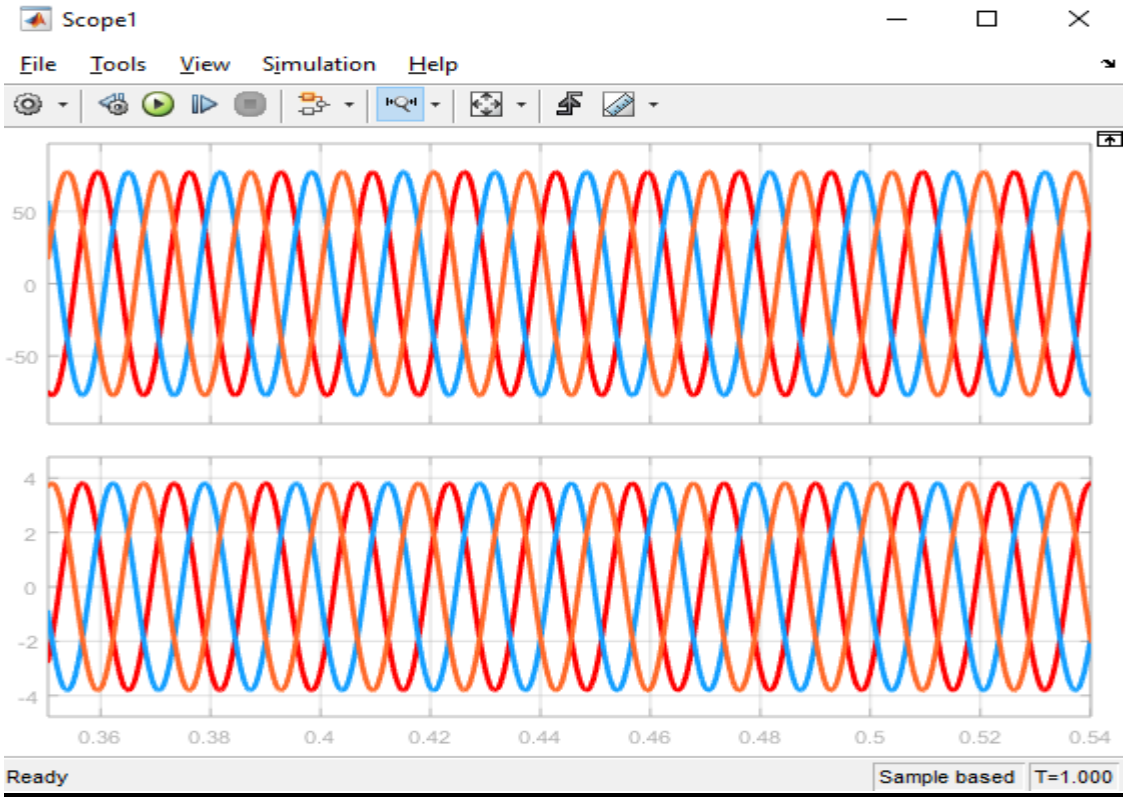


**8.17 output current and voltage with Resistor 10Ω and capacitor 150µ**

**For capacitive and resistive three phase load:**

**Resistor 100Ω and capacitor 250µ:**

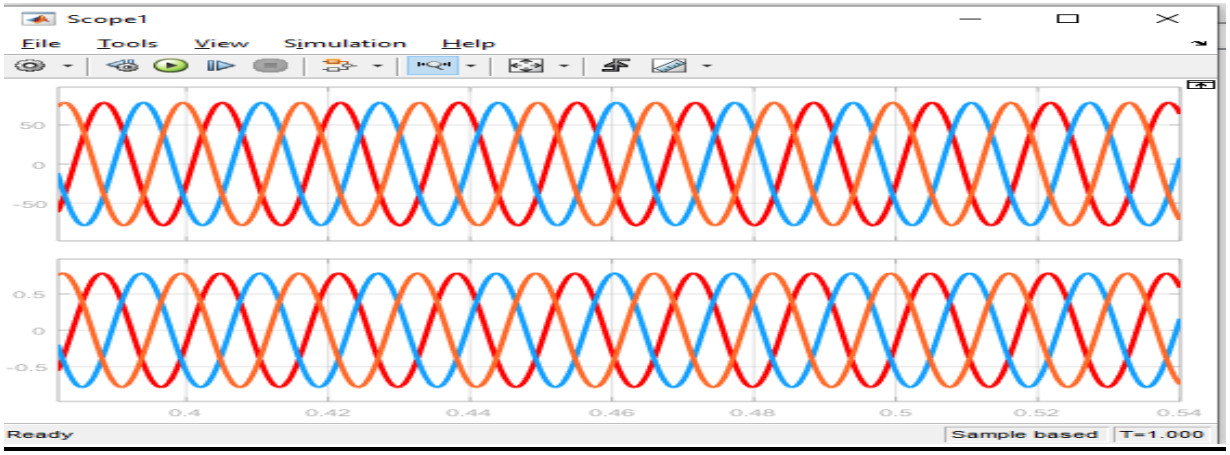


**8.18 output current and voltage with Resistor 100Ω and capacitor 250µ**

**Task 3**

| Load resistance | Capacitor | Input current | Input voltage | Output current | Output voltage |
|---|---|---|---|---|---|
| 1Ω | 100µ | A=8.73<-69.57<br>B=8.73<170.43<br>C=8.73<50.43 | A=81.65<0<br>B=81.65<-120<br>C=81.65<120 | A=8.70<-69.57<br>B=8.70<170.38<br>C=8.70<50.38 | A=230.87<157.46<br>B=230.87<82.54<br>C=230.87<-37.46 |
| 10Ω | 150µ | A=3.82<-54.97<br>B=3.82<-174.97<br>C=3.82<65.03 | A=81.65<0<br>B=81.65<-120<br>C=81.65<120 | A=3.82<-55.26<br>B=3.82<-175.26<br>C=3.82<64.74 | A=77.56<-115.77<br>B=77.56<124.23<br>C=77.56<4.23 |
| 100Ω | 250µ | A=0.78<-10.90<br>B=0.78<-130.9<br>C=0.78<109.10 | A=81.65<0<br>B=81.65<-120<br>C=81.65<120 | A=78.67<-19.72<br>B=78.67<-139.72<br>C=78.67<100.28 | A=0.78<-13.67<br>B=0.78<-133.67<br>C=0.78<106.33 |

**Simulation is performed in PWS and draw tables and graphs. See the affects by changing the transmission lines resistance and reactance alternatively.**

**Simulink:**

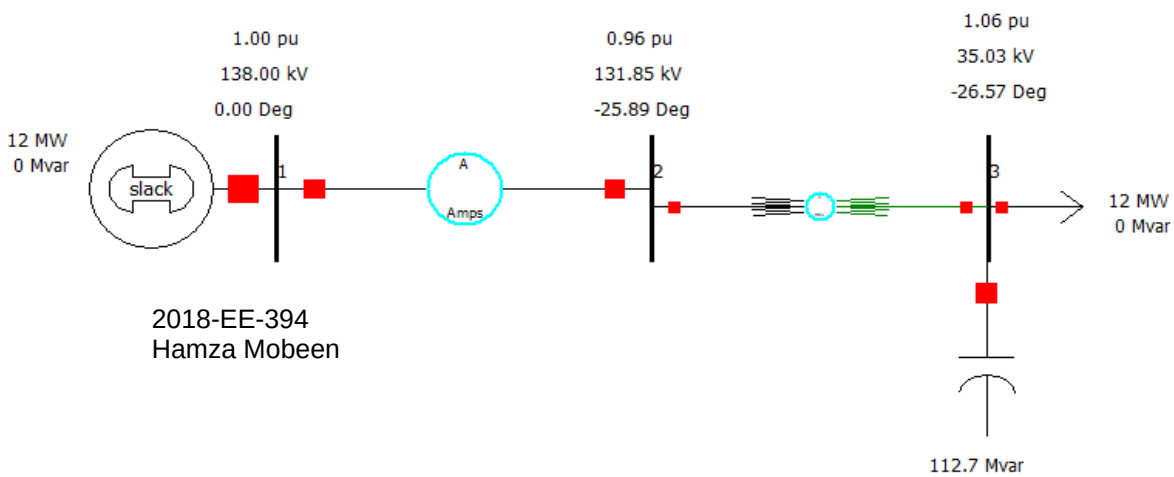


## 8.19 power world Simulink

**Reactance varying:**

**R=0.01 X=0.03:**

| capacitor | Bus 1 v(p.u) | Bus 2v(p.u) | Bus 3 v(p.u) |
|---|---|---|---|
| 0 | 1<0 | 1<-0.21 | 1<-0.89 |
| 5MVar | 1<0 | 1<-0.23 | 1.01<-0.92 |
| 100MVar | 1<0 | 1.03<-0.86 | 1.15<-1.44 |

**R=0.01 X-0.05:**

| capacitor | Bus 1 v(p.u) | Bus 2v(p.u) | Bus 3 v(p.u) |
|---|---|---|---|
| 0 | 1<0 | 1<-0.34 | 1<-1.03 |
| 5MVar | 1<0 | 1<-0.37 | 1.01<-1.05 |
| 100MVar | 1<0 | 1.06<-1 | 1.17<-1.55 |

**Resistance varying:**

**R=0.2 X=0.1:**

| capacitor | Bus 1 v(p.u) | Bus 2v(p.u) | Bus 3 v(p.u) |
|---|---|---|---|
| 0 | 1<0 | 0.98<-0.69 | 0.98<-1.41 |
| 5MVar | 1<0 | 0.98<-1.25 | 0.98<-1.96 |
| 100MVar | 1<0 | 1.06<-14.34 | 1.18<-14.88 |

**R=0.4 X=0.1**

| capacitor | Bus 1 v(p.u) | Bus 2v(p.u) | Bus 3 v(p.u) |
|---|---|---|---|
| 0 | 1<0 | 0.95<-0.69 | 0.95<-1.45 |
| 5MVar | 1<0 | 0.95<-1.78 | 0.96<-2.52 |
| 100MVar | 1<0 | 0.96<-25.89 | 1.06<-26.57 |

**Run mode:**

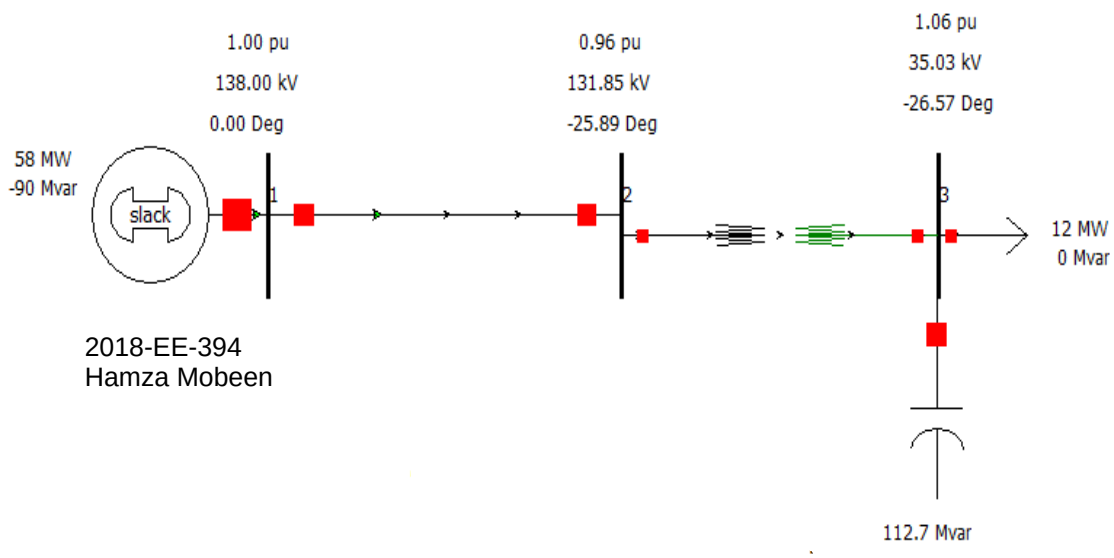


**Figure 8.20 run mode of Simulink**

**Conclusion:**

We learnt about Shunt Compensation in this lab by simulating a single phase and three phase medium length transmission line with varied loads using MATLAB Simulink and PWS. There will be issues with power transmission such as poor voltage control and power factor, low efficiency, and low dependability. Shunt capacitive compensation is a technique for avoiding these issues. We could improve our power factor by doing so.

| | |
|---|---|
| **Name** | **Hamza Mobeen** |
| **Reg. #** | **2018-EE-394** |
| **Date** | **6/09/2021** |
| **Marks** | |

# EXPERIMENT # 09

## To apply Series Capacitive Compensation in a Transmission lines

### Objective:

To learn the importance of Series Compensation by simulating a single phase and three phase medium length transmission line with different loads on MATLAB Simulink and PWS.

### Theory:

Series compensation is the method of improving the system voltage by connecting a capacitor in series with the transmission line. In other words, in series compensation, reactive power is inserted in series with the transmission line for improving the impedance of the system. It improves the power transfer capability of the line. It is mostly used in extra and ultra-high voltage line.

Series compensation has several advantages like it increases transmission capacity, improve system stability, control voltage regulation and ensure proper load division among parallel feeders. These advantages are discussed below.

- **Increase in Power Transfer Capability** The power transfer over a line is given by

$$P_1 = \frac{V_s V_R}{X_L} sin\delta$$

where $P_1$ – power transferred per phase (W)
$V_s$ – sending-end phase voltage (V)
$V_r$ – receiving-end phase voltage
$X_L$ – series inductive reactance of the line
δ – phase angle between $V_s$ and $V_r$

If a capacitor having capacitance reactance $X_c$ is connected in series with the line, the reactance of the line is reduced from $X_L$ to (XL– $X_C$). The power transfer is given by

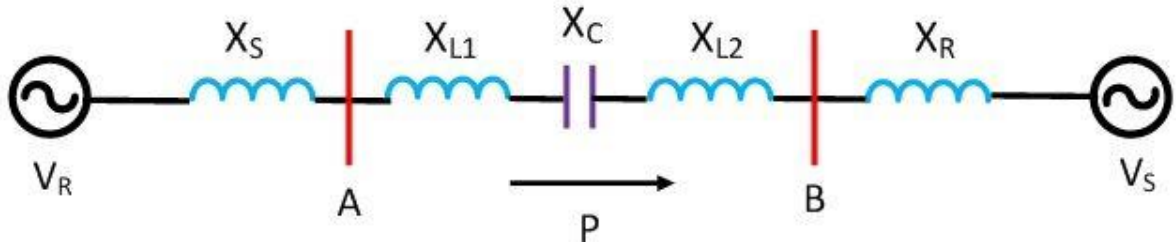


Figure 1: Three Phase Transmission lines with Series Capacitor

$$\frac{P_1}{P_2} = \frac{X_L}{X_L - X_C} = \frac{1}{1 - \frac{X_C}{X_L}} = \frac{1}{1-k}$$

$$P_2 = \frac{V_s V_R}{X_L - X_C} sin\delta$$

- **Improvement in System Stability –** For same power transfer and for the same value of sending and receiving end voltage, the phase angle δ in the case of the series impedance line is less that for the uncompensated line. The reduced value of δ gives higher stability.
- **Load Division among Parallel Line –** Series capacitors are used in transmission systems for improving the load division between parallel lines. When the new line with large power transfer capability is paralleled with an already existing line, then it is difficult to load the new line without overloading the old line. In such case the series compensation reduces the series reactance and proper load division among parallel circuit can be done easily. Load division increases the power transfer capability of the system and reduced losses.
- **Control of Voltage –** In series capacitor, there is an automatic change in Var (reactive power) with the change in load current. Thus, the drops in voltage levels due to sudden load variations are corrected instantly.

**Procedure:**

- Start MATLAB and go to start Simulink > Simpower system > Block Library.
- Open new file by clicking file new model or pressing ctrl+ n.
- Take Voltmeter and Ammeter from measurement section of Block Library.
- Take AC Voltage source from source section.
- Take RLC Load and branch, ground node, PI section line from element section.
- Also take Power GUI from block library simpower system in your file.
- Make connection as shown in figure.
- Calculate voltage regulation using formula.
- Now apply series capacitor at receiving end and see variation in voltage and current and their phase difference.
- Change value of capacitor and find trend variation in voltage, current and power factor.
- Repeat this system for different values of loads and capacitor values draw table and also draw graph for different values.

Three types of loads should be simulated for each T.L model.

- Pure resistive load
- Inductive load

- Capacitive Load

**Tasks1:**

**Simulation is done in single phase system and draw tables and graphs.**

## Simulink:

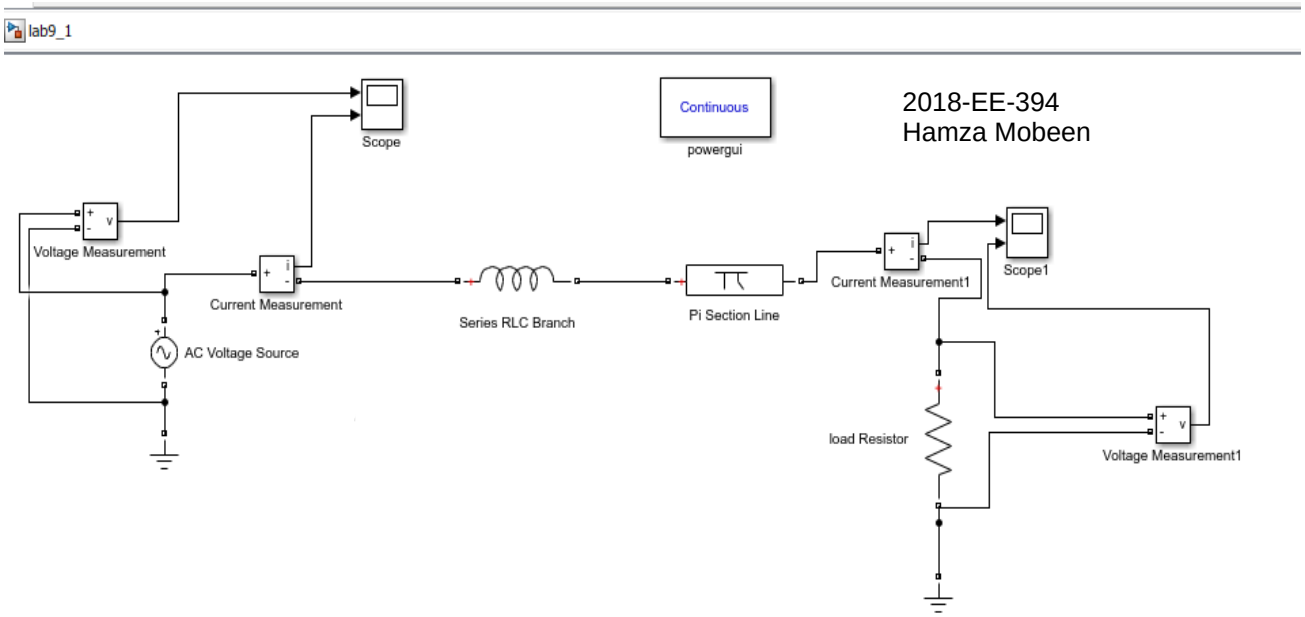


**Figure 9.1 Simulink of transmission line without series capacitor**

## Input current and voltage:

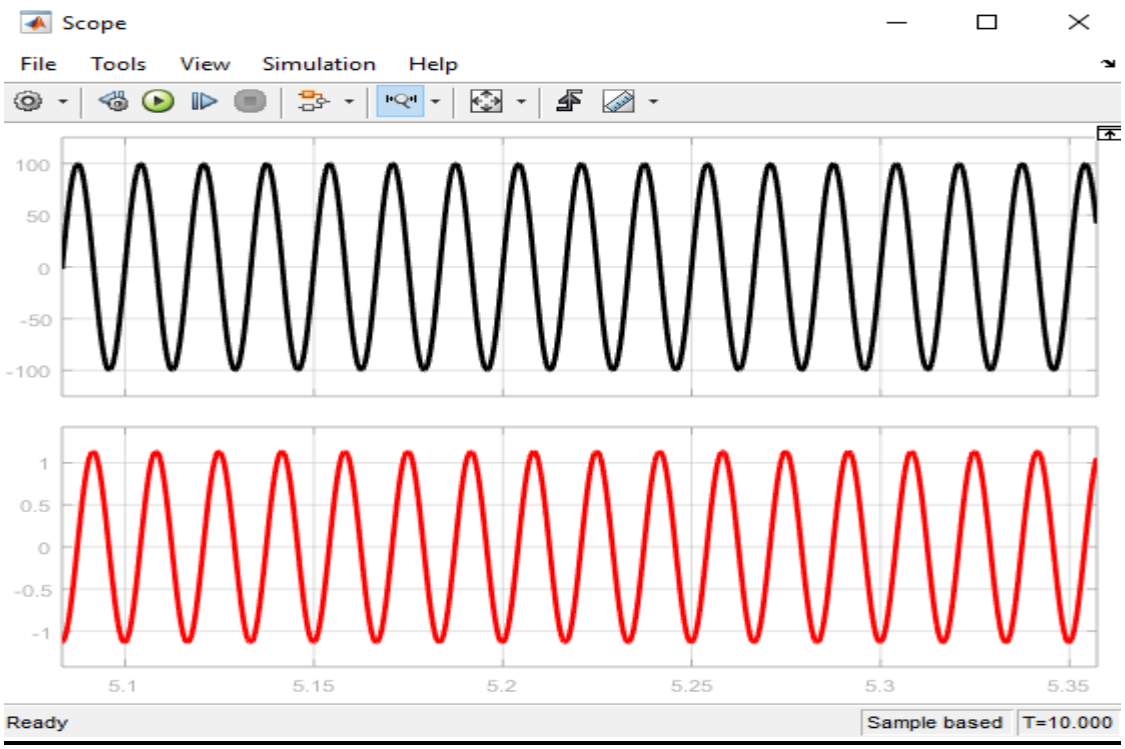


**Figure 9.1 scope of input current and voltage of transmission line**

**Output current and voltage when R=1Ω**

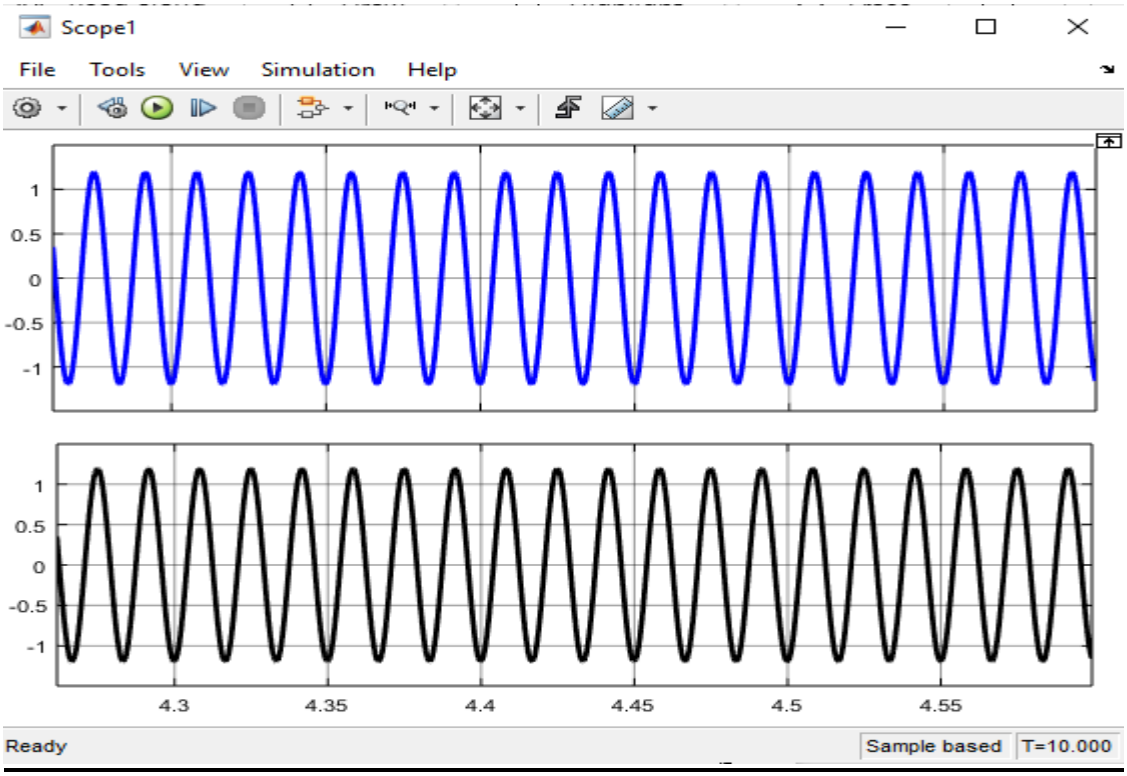


**Figure 9.3 output current and voltage at R=1Ω**

## Output current and voltage at R=10Ω:

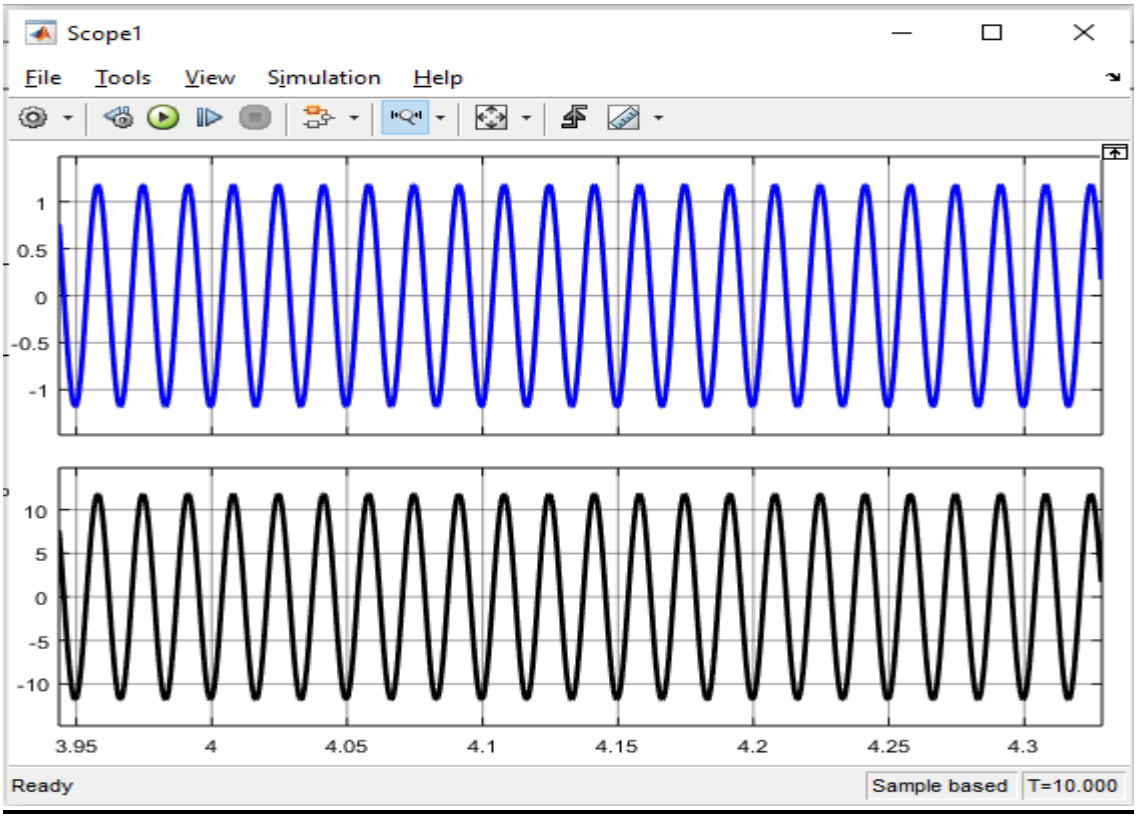


**Figure 9.4 Output current and voltage at R=10Ω**

## Output current and voltage at R=100Ω

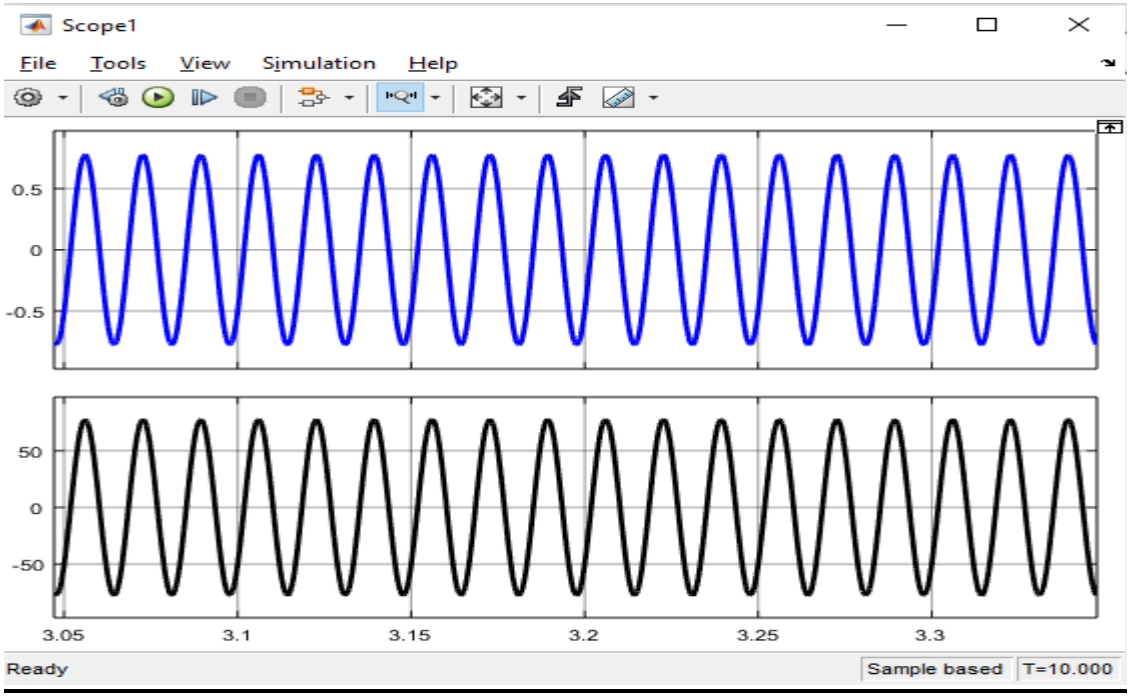

**Figure 9.5 Output current and voltage at R=100Ω**

**For load resistance without series capacitor:**

| | Resistance | Input current | Input voltage | Output Current | Output voltage |
|---|---|---|---|---|---|
| 1 | 1 | 1.14<-87.51 | 100<0 | 1.20<-87.32 | 1.20<-87.32 |
| 2 | 10 | 1.13<-80.72 | 100<0 | 1.18<-81.51 | 11.85<-81.51 |
| 3 | 100 | 0.74<-33.56 | 100<0 | 0.78<-40.46 | 77.57<-40.46 |

**Simulink:**

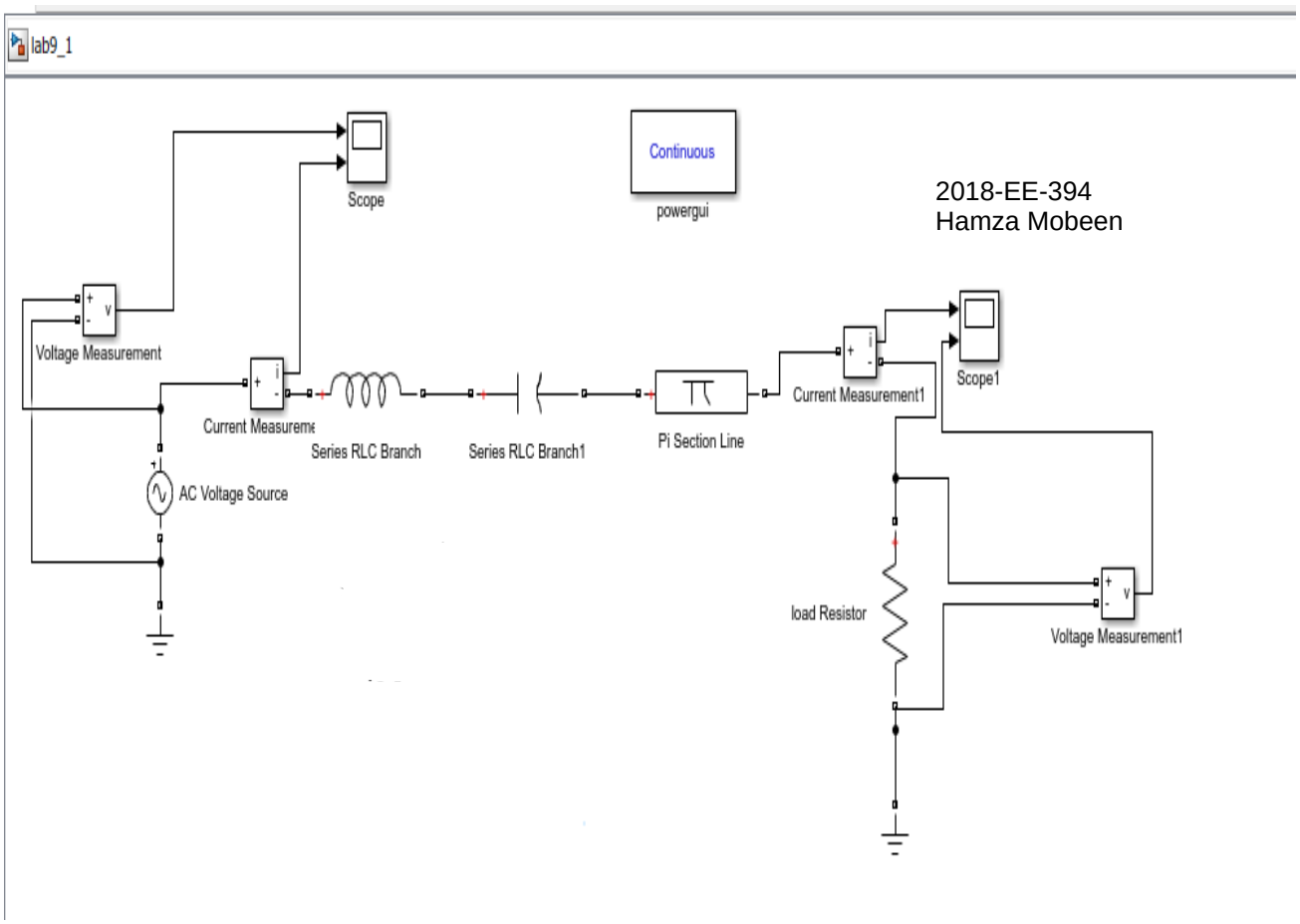


**Figure 9.6 Simulink of transmission line with series capacitor**

**Output current and voltage with R=1Ω and series capacitance =100µ:**

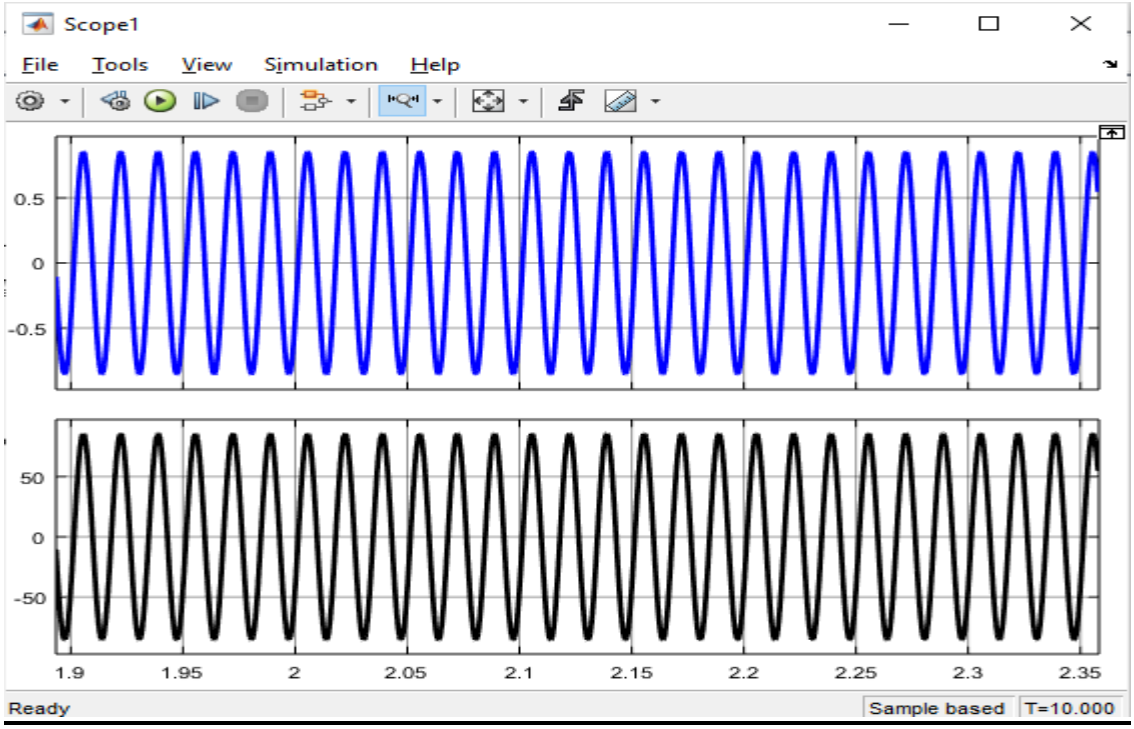


**Figure 9.7 Output current and voltage with R=1Ω and series capacitance =100µ**

**Output current and voltage with R=10Ω and series capacitance =150µ:**

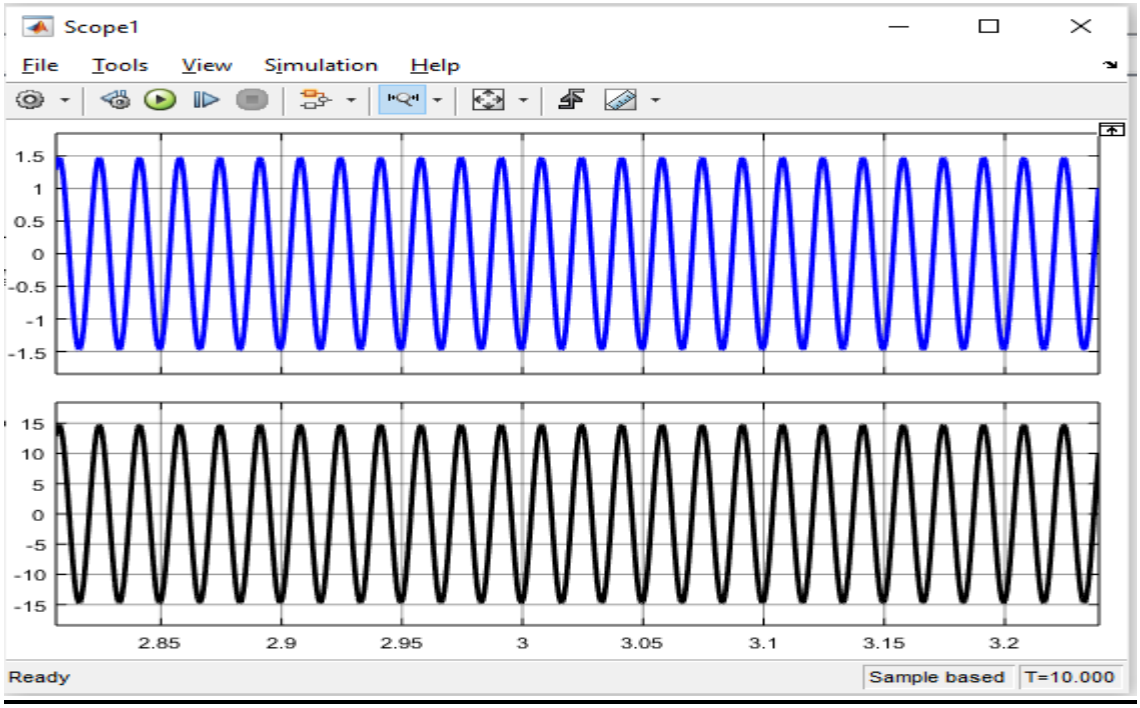


**Figure 9.8 Output current and voltage with R=10Ω and series capacitance =150µ**

**Output current and voltage with R=100Ω and series capacitance =200µ**

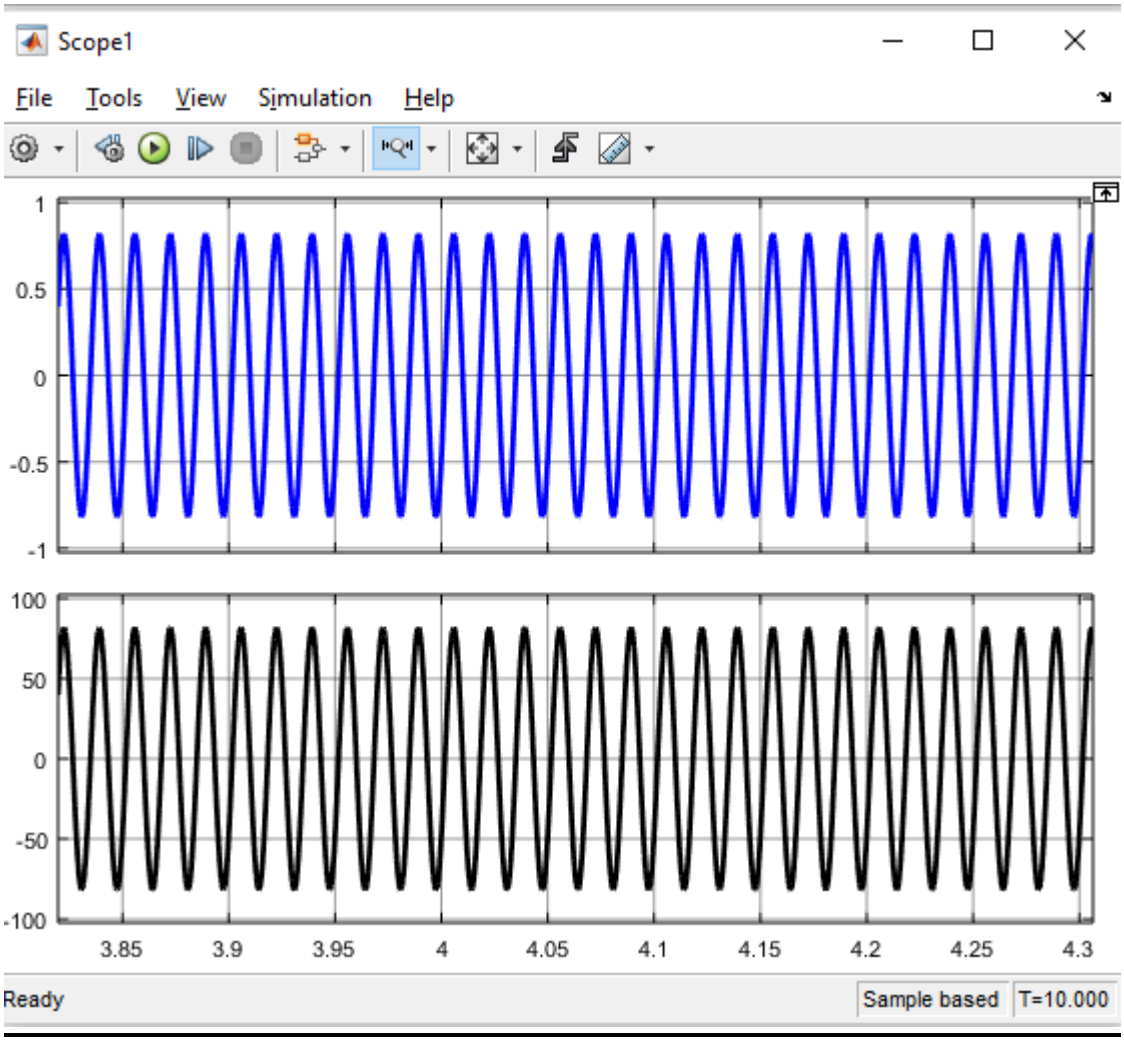


**Figure 9.9 Output current and voltage with R=100Ω and series capacitance =200µ**

**For load resistance and series capacitance:**

| | Resistance | Series capacitance | Input current | Input voltage | Output Current | Output voltage |
|---|---|---|---|---|---|---|
| 1 | 1 | 100µ | 1.60<-76.81 | 100<0 | 1.68<-77.59 | 16.77<-77.59 |
| 2 | 10 | 150µ | 1.40<-78.43 | 100<0 | 1.47<-79.21 | 14.71<-79.21 |
| 3 | 100 | 200µ | 0.78<-28.59 | 100<0 | 0.82<-35.49 | 81.74<-35.49 |

**Task 2:**

**Simulation is done in three phase system and draw tables and graphs.**

**<u>Simulink:</u>**

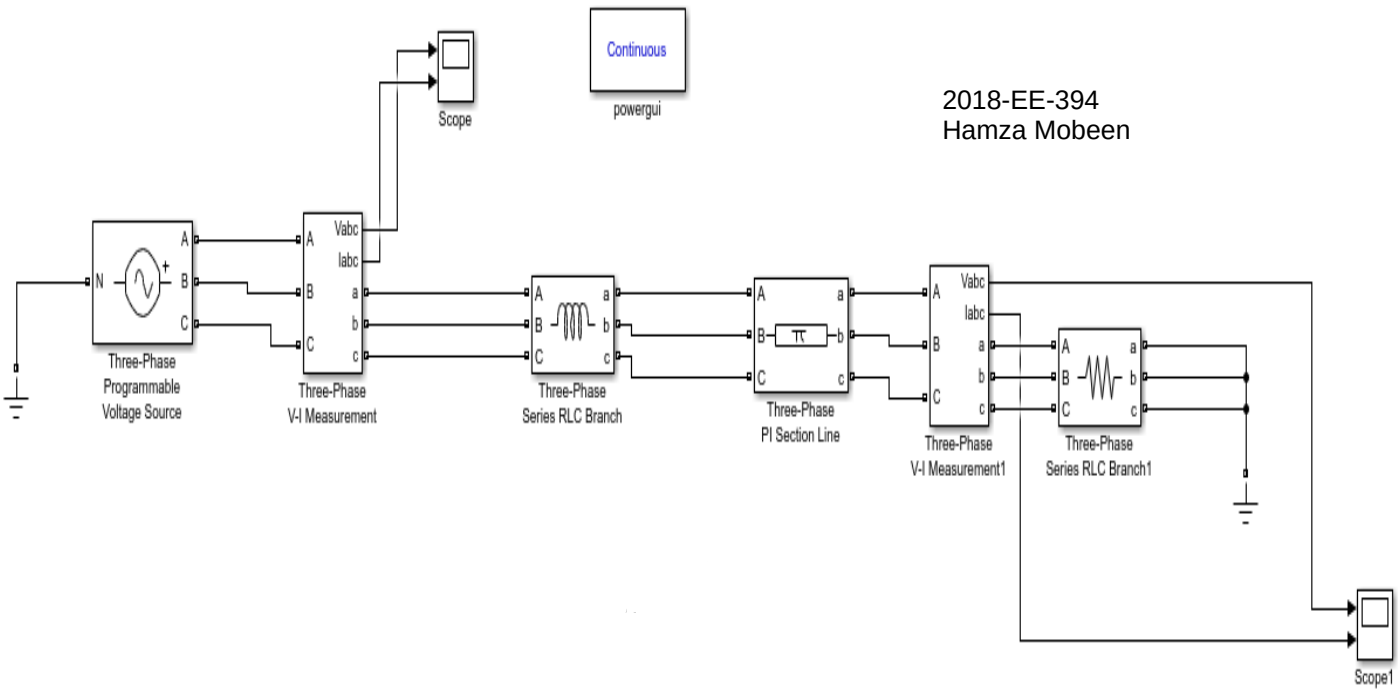


**<u>Figure 9.10 three phase transmission line without series capacitance</u>**

## Input current and voltage:

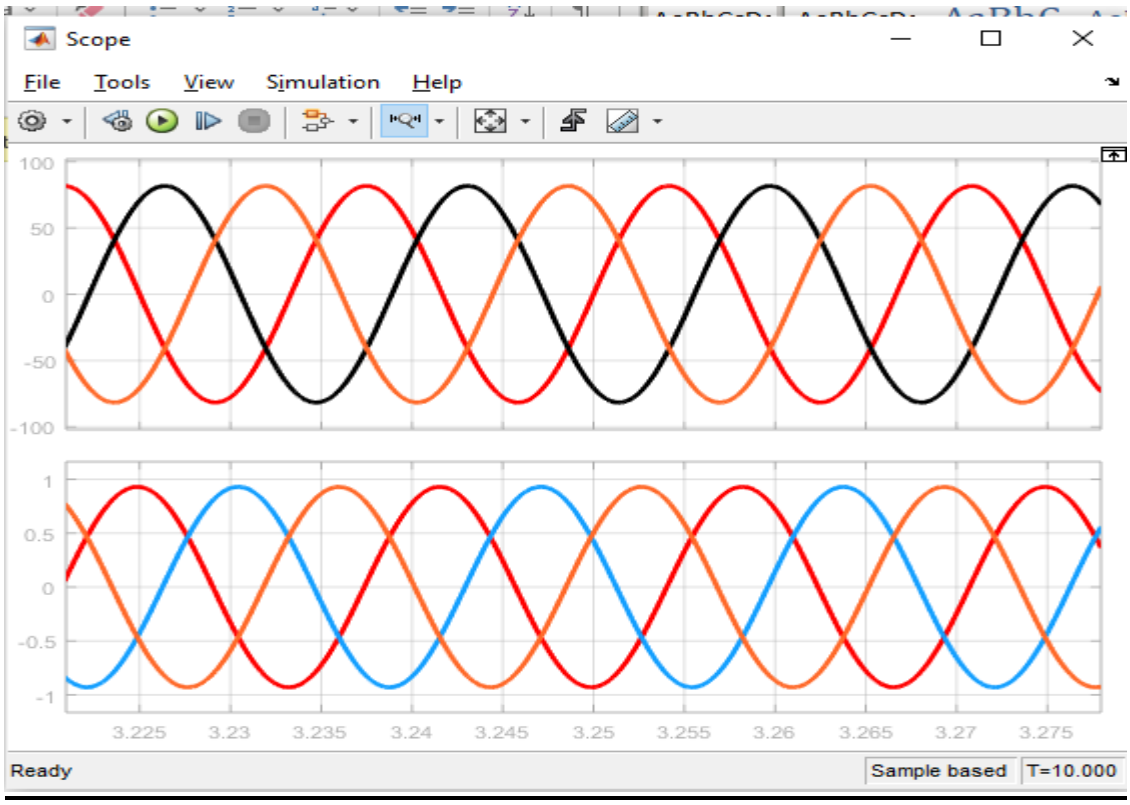


**Figure 9.11 input current and voltage scope**

## Output current and load when R=1Ω

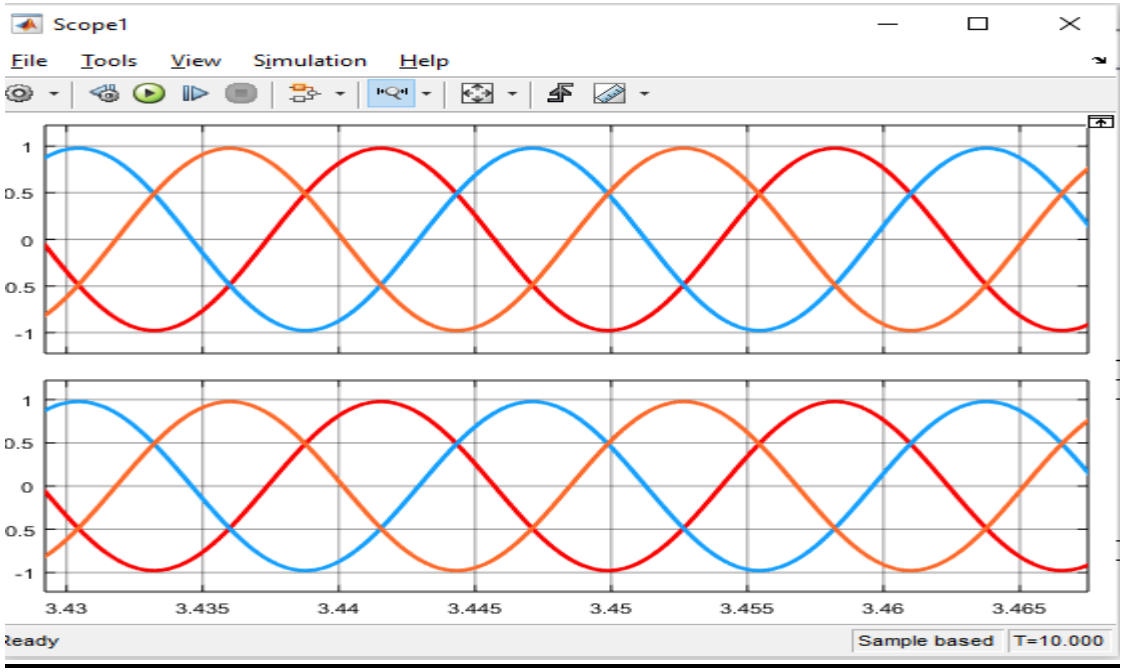


**Figure 9.12 Output current and load when R=1Ω**

**Output current and load when R=10Ω**

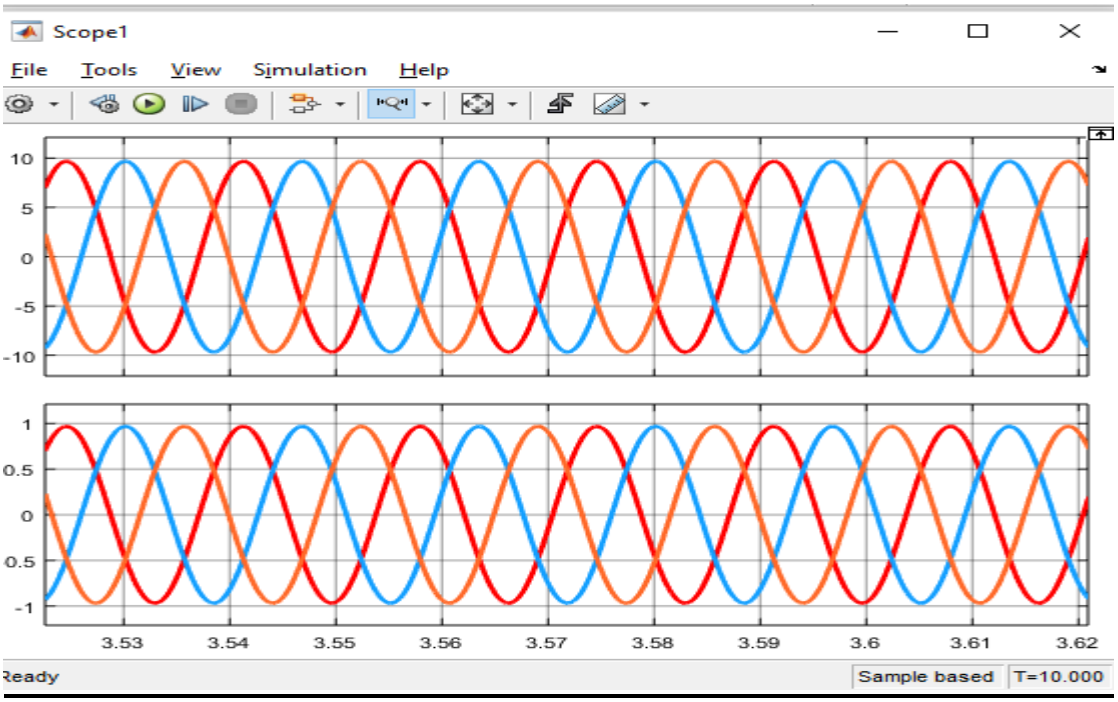


**Figure 9.13 Output current and load when R=10Ω**

**Output current and load when R=100Ω**

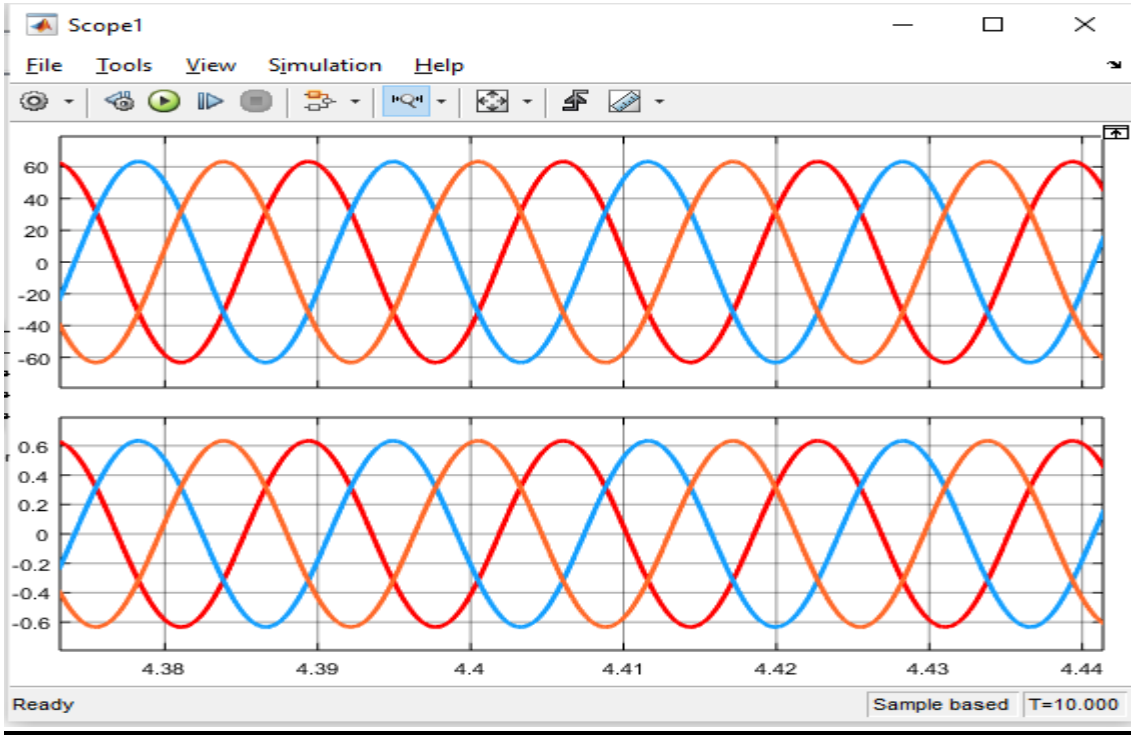


**Figure 9.14 Output current and load when R=100Ω**

**For resistance:**

| | Resistance | Input current | Input voltage | Output Current | Output voltage |
|---|---|---|---|---|---|
| 1 | 1 | A=0.93<-87.15<br>B=0.93<152.68<br>C-=0.93<32.85 | A=81.65<0<br>B=81.65<-120<br>C=81.65<120 | A=0.98<-87.32<br>B=0.98<152.68<br>C=0.98<32.68 | A=0.98<-87.38<br>B=0.98<152.68<br>C=0.98<32.68 |
| 2 | 10 | A=0.92<-80.72<br>B=0.92<159.28<br>C=0.92<-39.28 | A=81.65<0<br>B=81.65<-120<br>C=81.65<120 | A=0.98<-81.51<br>B=0.98<158.49<br>C=0.98<38.49 | A=9.67<-81.51<br>B=9.67<158.49<br>C=0.67<38.49 |
| 3 | 100 | A=0.61<-33.56<br>B=0.61<-153.56<br>C=0.61<86.44 | A=81.65<0<br>B=81.65<-120<br>C=81.65<120 | A=0.68<-40.46<br>B=0.68<-160.46<br>C=0.68<79.94 | A=63.34<-160.46<br>B=63.34<79.94<br>C=63.34<-33.56 |

**Simulink:**

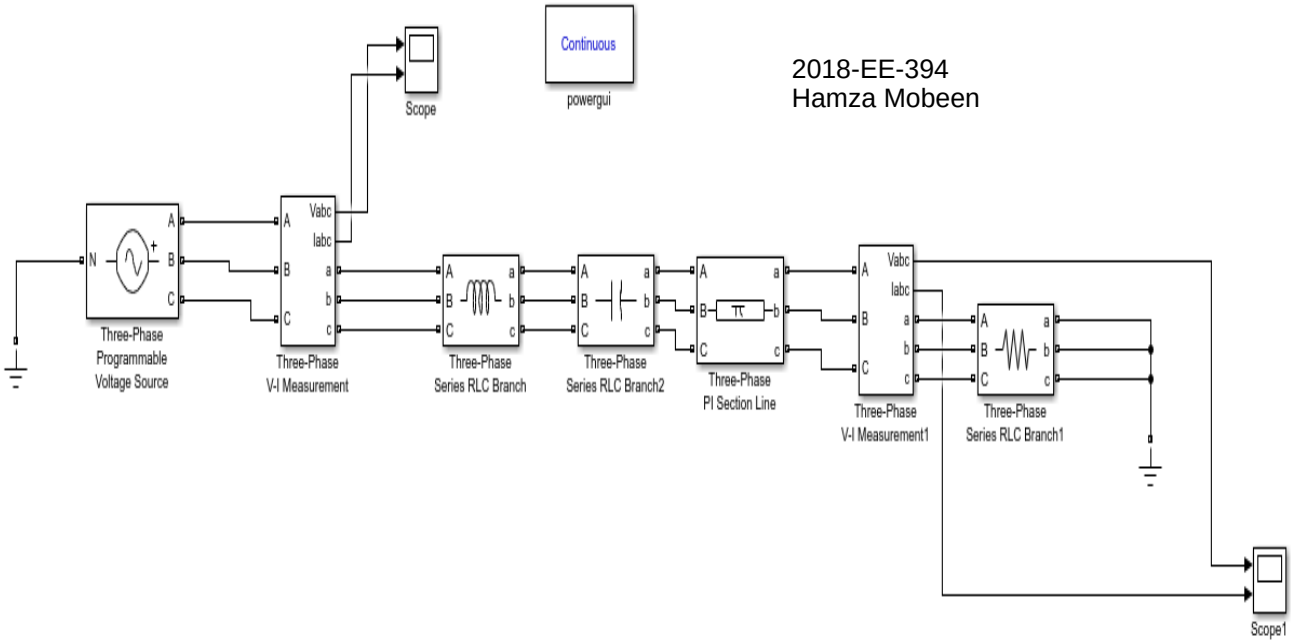


**Figure 9.15 three phase transmission line with series capacitance**

**Output current and voltage for R=1Ω and capacitance=100µ**

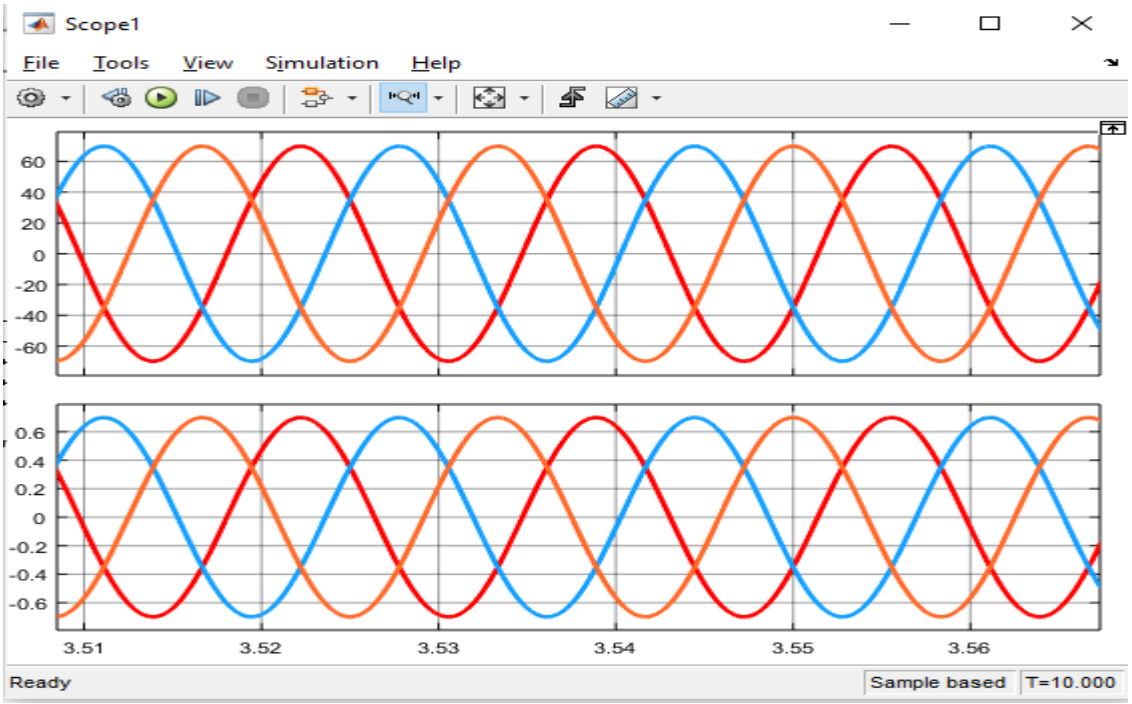


**Figure 9.16 Output current and voltage for R=1Ω and capacitance=100µ**

**Output current and voltage for R=10Ω and capacitance=150µ**

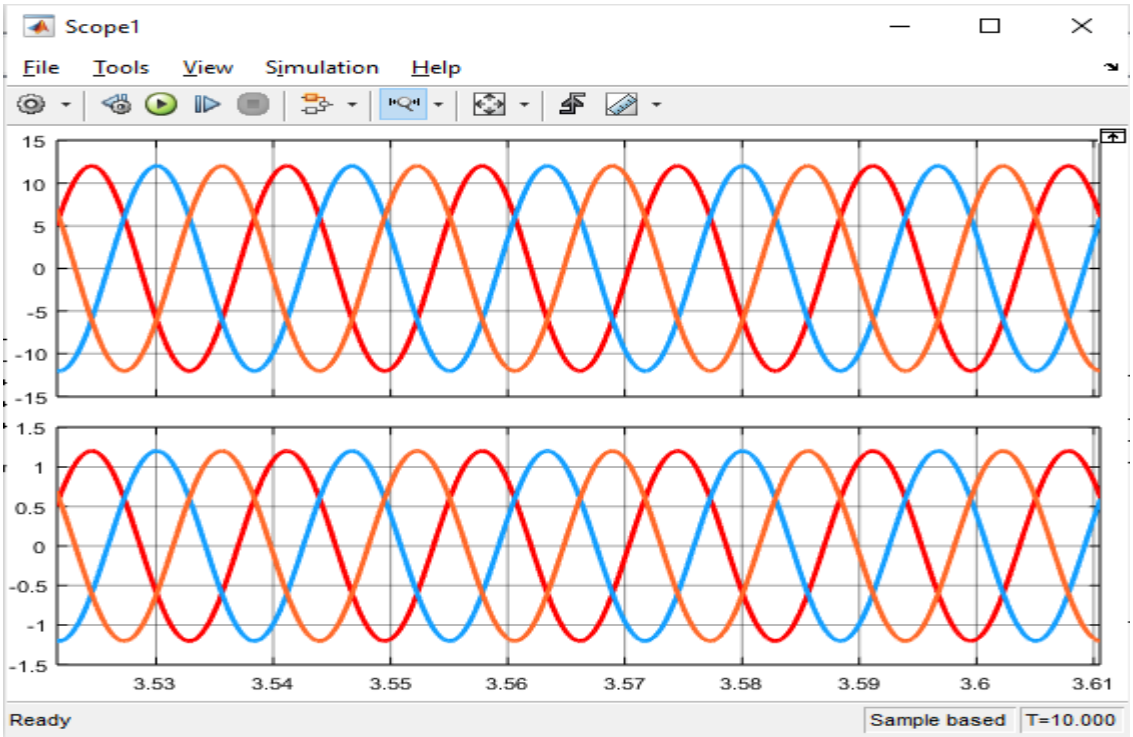


**Figure 9.17 Output current and voltage for R=10Ω and capacitance=150µ**

**Output current and voltage for R=100Ω and capacitance=200µ**

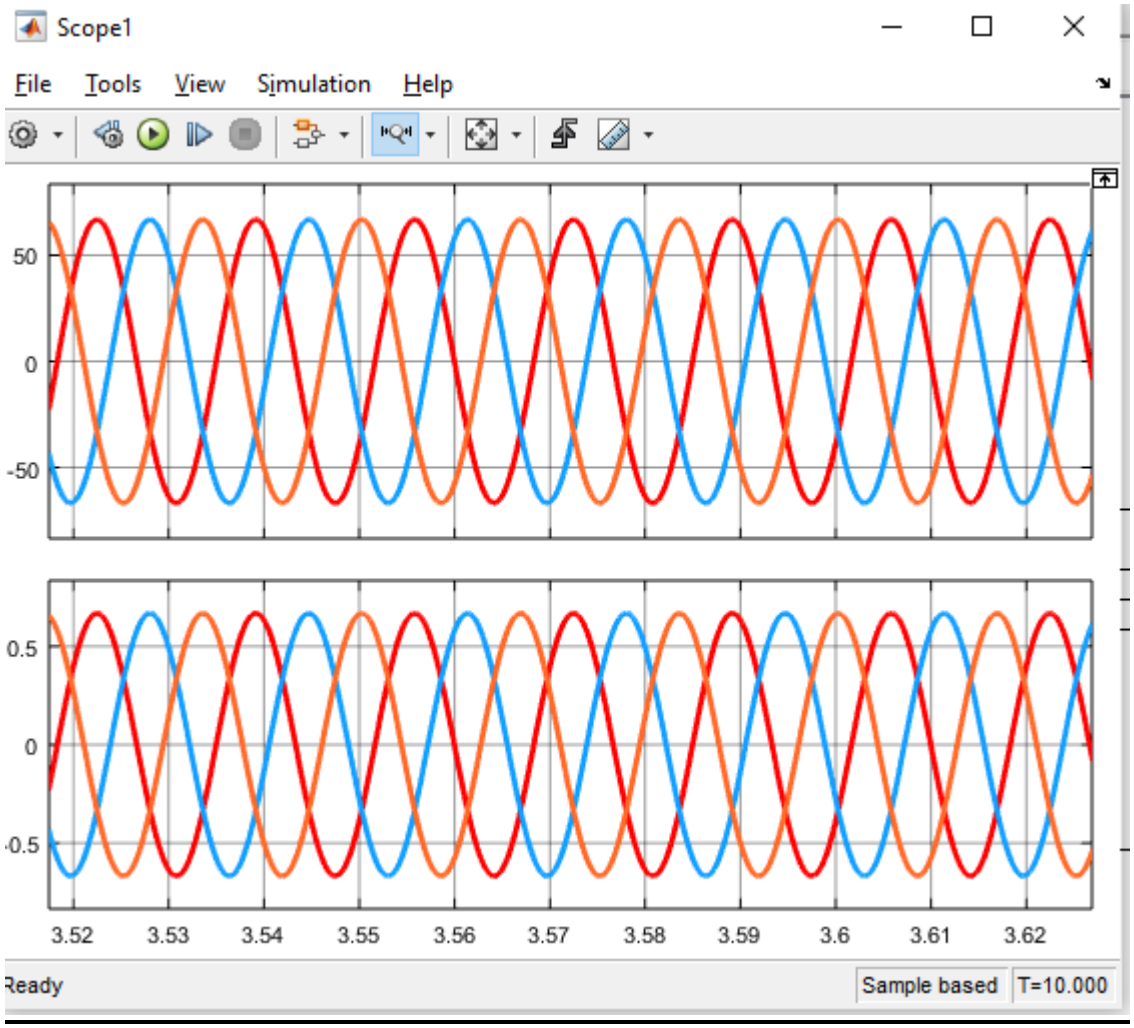


**Figure 9.18 Output current and voltage for R=100Ω and capacitance=200µ**

**For resistance and series capacitance:**

| | R | Series capacitance | Input current | Input voltage | Output Current | Output voltage |
|---|---|---|---|---|---|---|
| 1 | 1 | 100µ | A=0.67<-23.11<br>B=0.67<-143.11<br>C=0.67<96.89 | A=81.65<0<br>B=81.65<-120<br>C=81.65<120 | A=0.70<-30.01<br>B=0.70<-150.01<br>C=0.70<89.99 | A=69.91<-30.01<br>B=69.91<-150.01<br>C=69.91<89.99 |
| 2 | 10 | 150µ | A=1.15<-78.43<br>B=1.15<161.75<br>C=1.15<41.57 | A=81.65<0<br>B=81.65<-120<br>C=81.65<120 | A=1.20<-79.21<br>B=1.20<160.79<br>C=1.20<40.79 | A=12.03<-79.21<br>B=12.03<160.79<br>C=12.03<40.79 |
| 3 | 100 | 200µ | A=0.64<-28.59<br>B=0.64<-148.59<br>C=0.64<91.41 | A=81.65<0<br>B=81.65<-120<br>C=81.65<120 | A=0.67<-35.49<br>B=0.67<-155.49<br>C=0.67<84.51 | A=66.74<-35.49<br>B=66.74<-155.49<br>C=66.74<84.51 |

**Task 3**

**Simulation is performed in PWS and draw tables and graphs.**

**Simulink:**

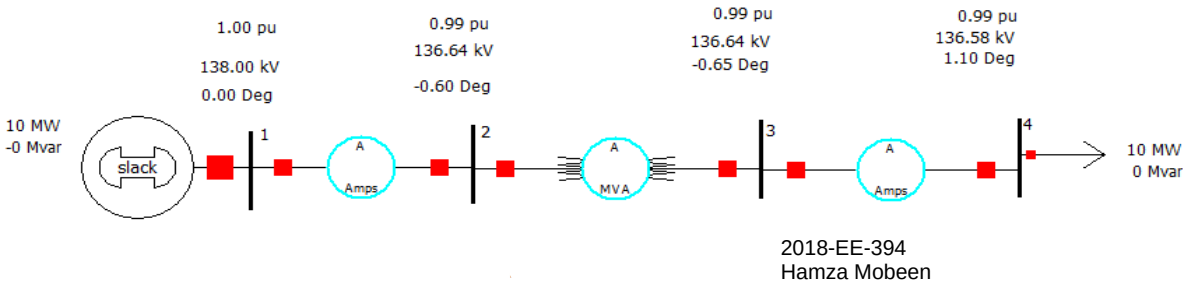


**Figure 9.19 power word simulation of transmission line**

**Run mode:**

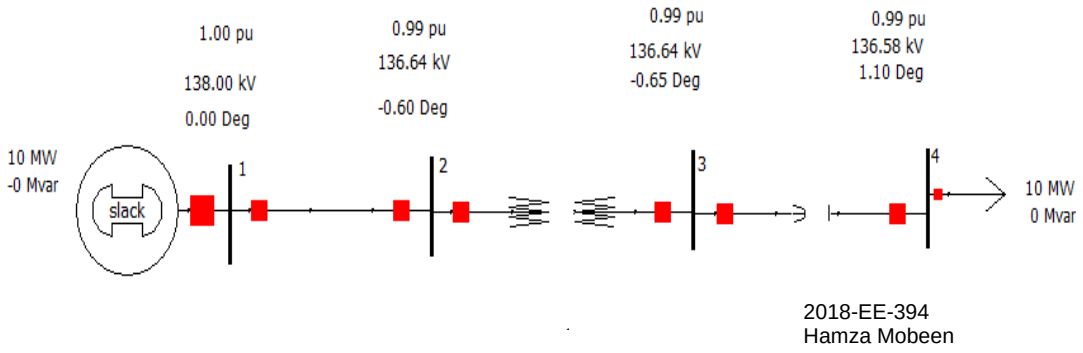


**Figure 2.0 run mode of transmission line**

**Constant reactance and varying resistance:**

**R=0.2 X=0.1**

| Capacitance | Bus 1 | Bus 2 | Bus 3 | Bus 4 |
|---|---|---|---|---|
| 0 | 1<0 | 0.98<-0.57 | 0.98<-1.17 | 0.98<1.17 |
| -0.1 | 1<0 | 0.98<-0.58 | 0.98<-1.18 | 0.98<0.58 |
| -0.3 | 1<0 | 0.98<-0.61 | 0.98<-1.21 | 0.98<0.58 |

**R=0.05 X=0.1**

| Capacitance | Bus 1 | Bus 2 | Bus 3 | Bus 4 |
|---|---|---|---|---|
| 0 | 1<0 | 0.99<-0.57 | 0.99<-1.15 | 0.99<-1.15 |
| -0.1 | 1<0 | 0.99<-0.58 | 0.99<-1.15 | 0.99<-0.58 |
| -0.3 | 1<0 | 1<-0.58 | 1<-1.16 | 0.99<0.58 |

**R=1.5 X=0.1**

| Capacitance | Bus 1 | Bus 2 | Bus 3 | Bus 4 |
|---|---|---|---|---|
| 0 | 1<0 | 0.98<-0.57 | 0.98<-1.16 | 0.98<-1.16 |
| -0.1 | 1<0 | 0.98<-0.58 | 0.98<-1.17 | 0.98<-0.58 |
| -0.3 | 1<0 | 0.98<0.60 | 0.99<-1.19 | 0.99<0.58 |

**Constant resistance varying reactance**

**X=0.1 R=0.1**

| Capacitance | Bus 1 | Bus 2 | Bus 3 | Bus 4 |
|---|---|---|---|---|
| 0 | 1<0 | 0.99<-0.58 | 0.99<0.64 | 0.99<-64 |
| -0.1 | 1<0 | 0.99<-0.58 | 0.99<0.64 | 0.99<-0.06 |
| -0.3 | 1<0 | 0.99<0.60 | 0.99<-0.65 | 0.99<1.10 |

**X=0.4 R=0.1**

| Capacitance | Bus 1 | Bus 2 | Bus 3 | Bus 4 |
|---|---|---|---|---|
| 0 | 1<0 | $0.99\angle -2.32$ | 0.99<-2.44 | 0 |
| -0.1 | 1<0 | 0.99<-2.35 | 0.99<-2.47 | 0.98<-1.88 |
| -0.3 | 1<0 | 0.99<-2.37 | 0.99<-2.49 | 0.98<-0.12 |

**X=0.6 R=1**

| Capacitance | Bus 1 | Bus 2 | Bus 3 | Bus 4 |
|---|---|---|---|---|
| 0 | 1<0 | $0.99\angle -3.54$ | 0.99<-3.66 | 0 |
| -0.1 | 1<0 | 0.99<-3.53 | 0.99<-3.65 | 0.98<-3.05 |
| -0.3 | 1<0 | 0.99<-3.54 | 0.99<-3.66 | 0.98<-1.29 |

**Conclusion:**

We learnt the importance of Series Compensation in this lab by simulating a single phase and three phase long transmission line with varied loads using MATLAB Simulink and PWS. There will be issues with power transmission such as poor voltage control and power factor, low efficiency, and low dependability. A technique for avoiding these issues is series capacitive compensation. We could improve our power factor by doing so.

| | |
|---|---|
| **Name** | **Hamza Mobeen** |
| **Reg. #** | **2018-EE-394** |
| **Date** | **6/16/2021** |
| **Marks** | |

# EXPERIMENT # 10

## Voltage Regulation

### Objective:

To learn the importance of voltage regulation by simulating a single phase short, medium and long length transmission line with different loads on MATLAB Simulink.

### Theory:

When a transmission line is carrying current, there is a voltage drop in the line due to the resistance and inductance of the line. The result is that receiving end voltage $V_R$ is generally less than the sending end voltage $V_S$. This voltage drop is expressed a percentage of the receiving end voltage and is called as voltage regulation.

The difference in the voltage at the receiving end of a transmission line between conditions of no load and full load is called as voltage regulation. It is expressed as percentage of receiving end voltage.

$$\text{\% age Voltage Regulation} = \frac{\mathbf{VR(NL) - VR(FL)}}{\mathbf{VR(FL)}} \times \mathbf{100}$$

Voltage regulation is negative in case of capacitive loads.

**MATLAB Diagram**

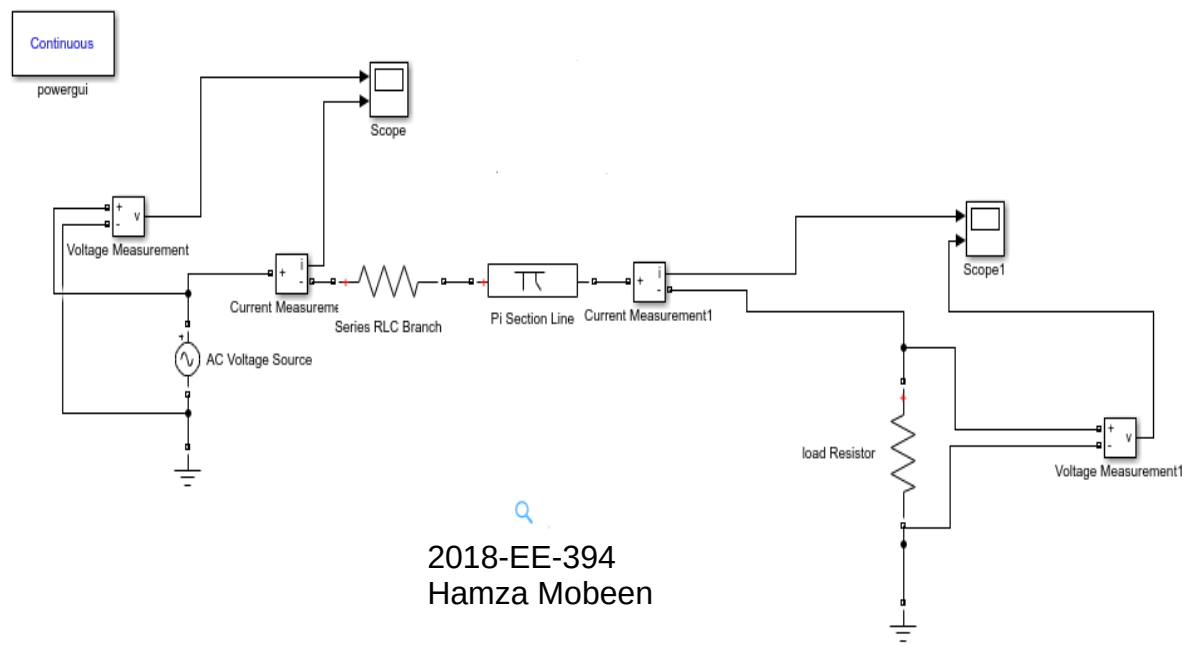


**Figure 10.1 Simulink of voltage regulation transmission line circuit**

## Short Transmission line:

For short transmission lines, sending end voltage is given by:

$V_S = V_R + Z\, I_R$. At no load, $I_R$ is equal to zero. So, $V_{R(NL)} = V_S$. Hence

$$\% \text{ age Voltage Regulation} = \frac{\mathbf{Vs - VR}}{\mathbf{VR}} \times \mathbf{100}$$

## L=70km:

**Input current and voltage:**

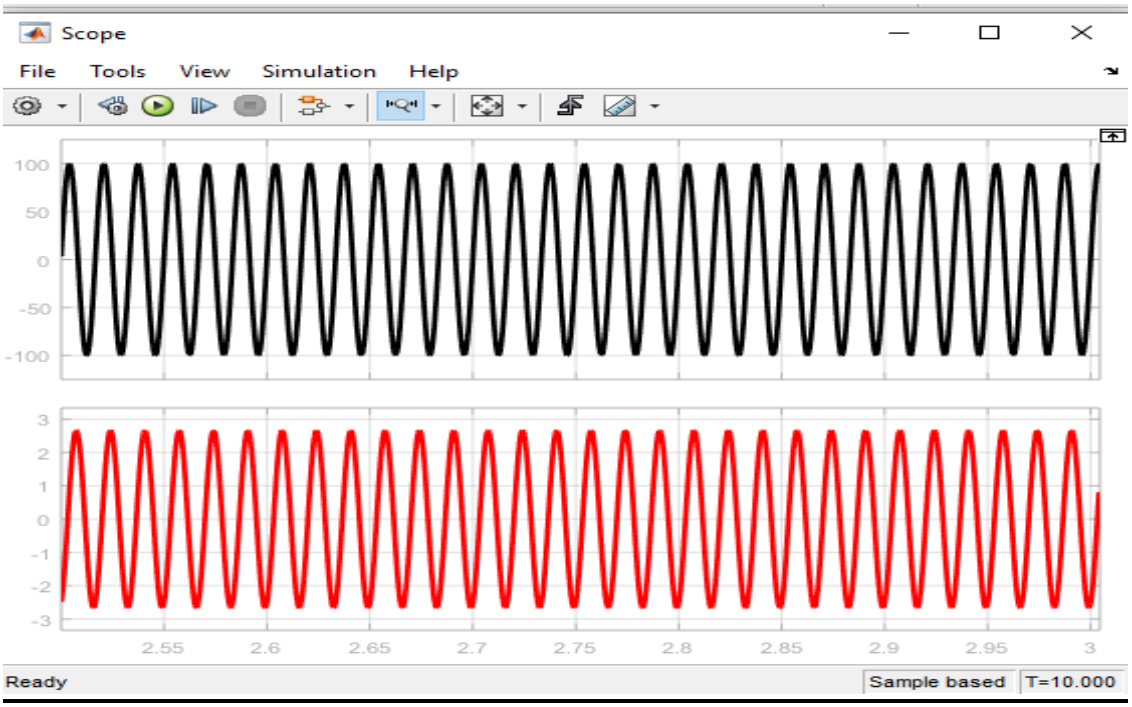


**Figure 10.2 input current and voltage waveform**

**Output current and voltage:**

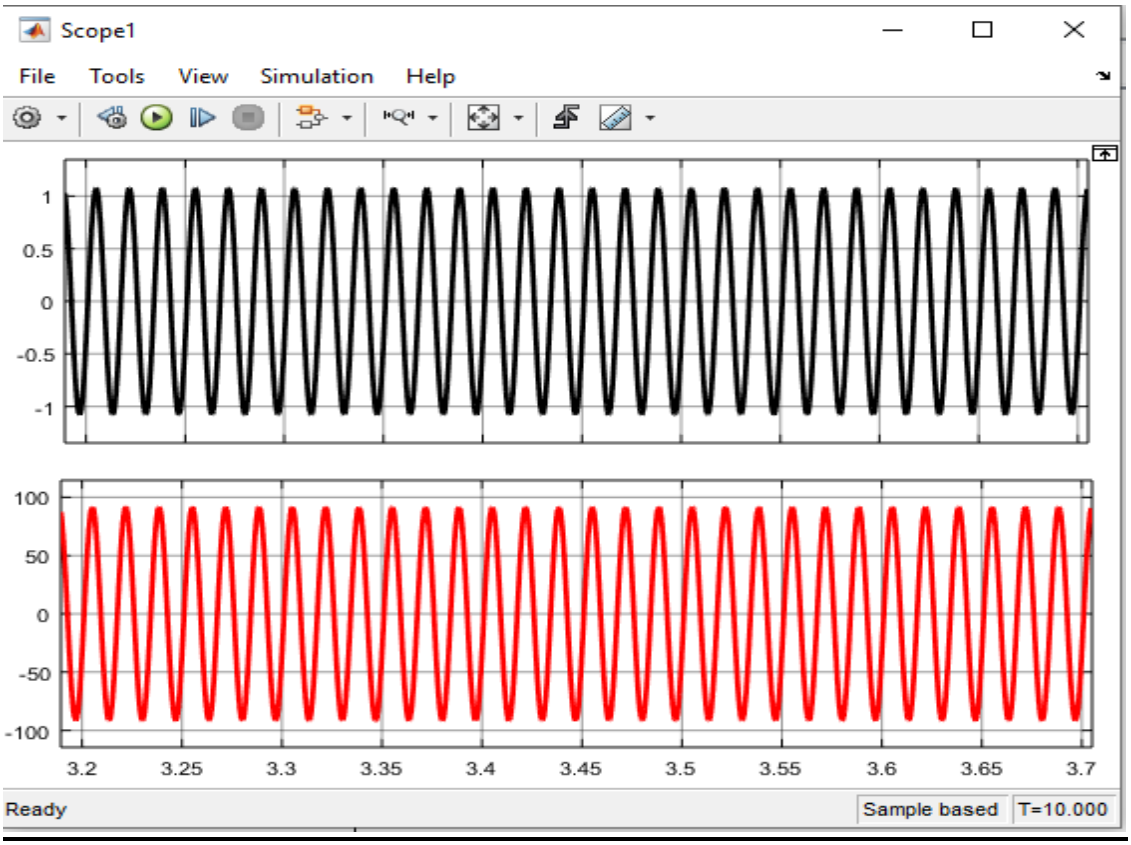


**Figure 10.3 output current and voltage waveform**

**Measurement:**

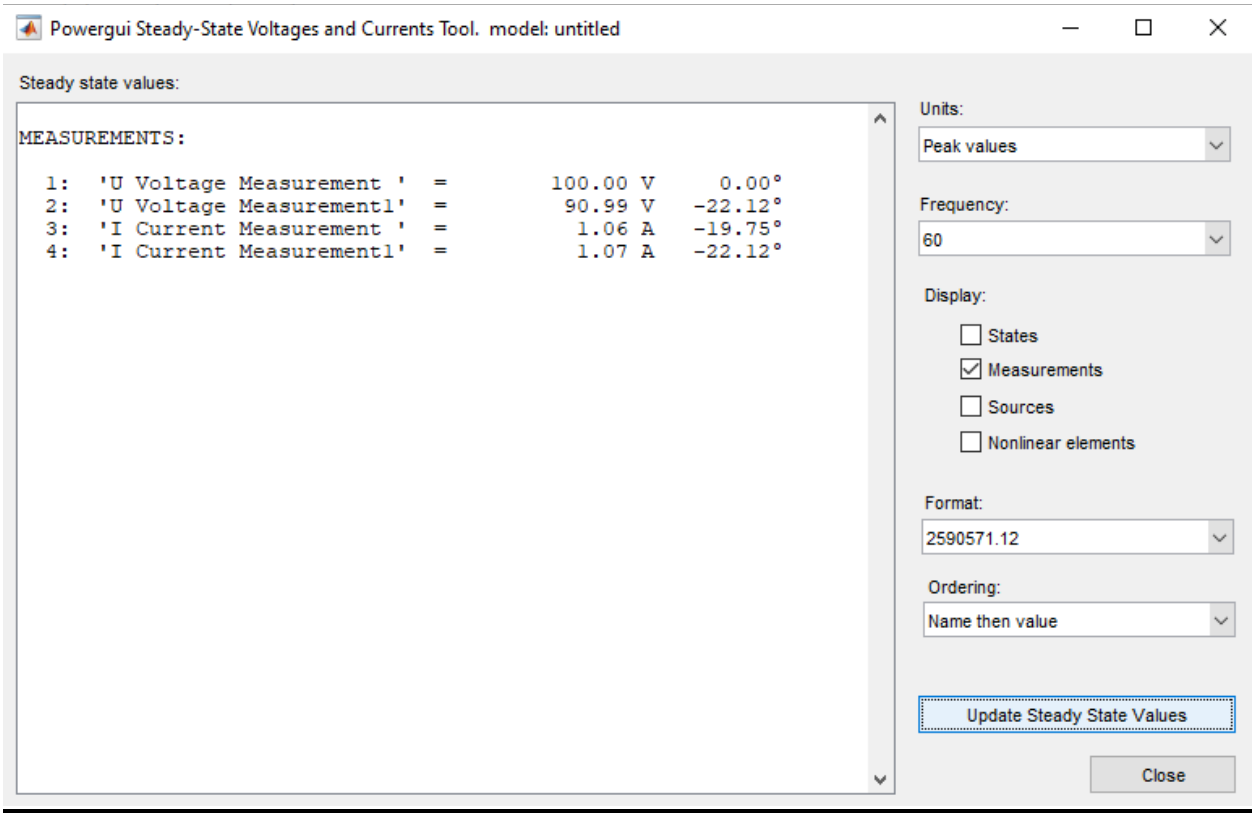


**Figure10.4 measurements of circuit**

**Voltage regulation calculation:**

**Figure 10.5 voltage regulation**

## Medium Transmission line:

Sending end voltage for medium length transmission line is:

$V_S = AV_R + BI_R$ and $A = (1 + YZ/2)$ ; $B = Z$. At no load, $I_R$ is zero. So $V_{R(NL)} = V_S / A$.

$$\text{\% age Voltage Regulation} = \frac{\frac{Vs}{A} - VR}{VR} \times 100$$

## L=95 km:

Hamza Mobeen
2018-EE-394
L=95km Short transmission Line

$V_S = 100\angle 0^\circ$

$V_R = 91.62\angle -21.11^\circ$

$\therefore \% VREG = \frac{|V_S| - |V_R|}{|V_R|}$

$= \frac{100 - 91.62}{91.62} = 9.146\%$

## Measurement:

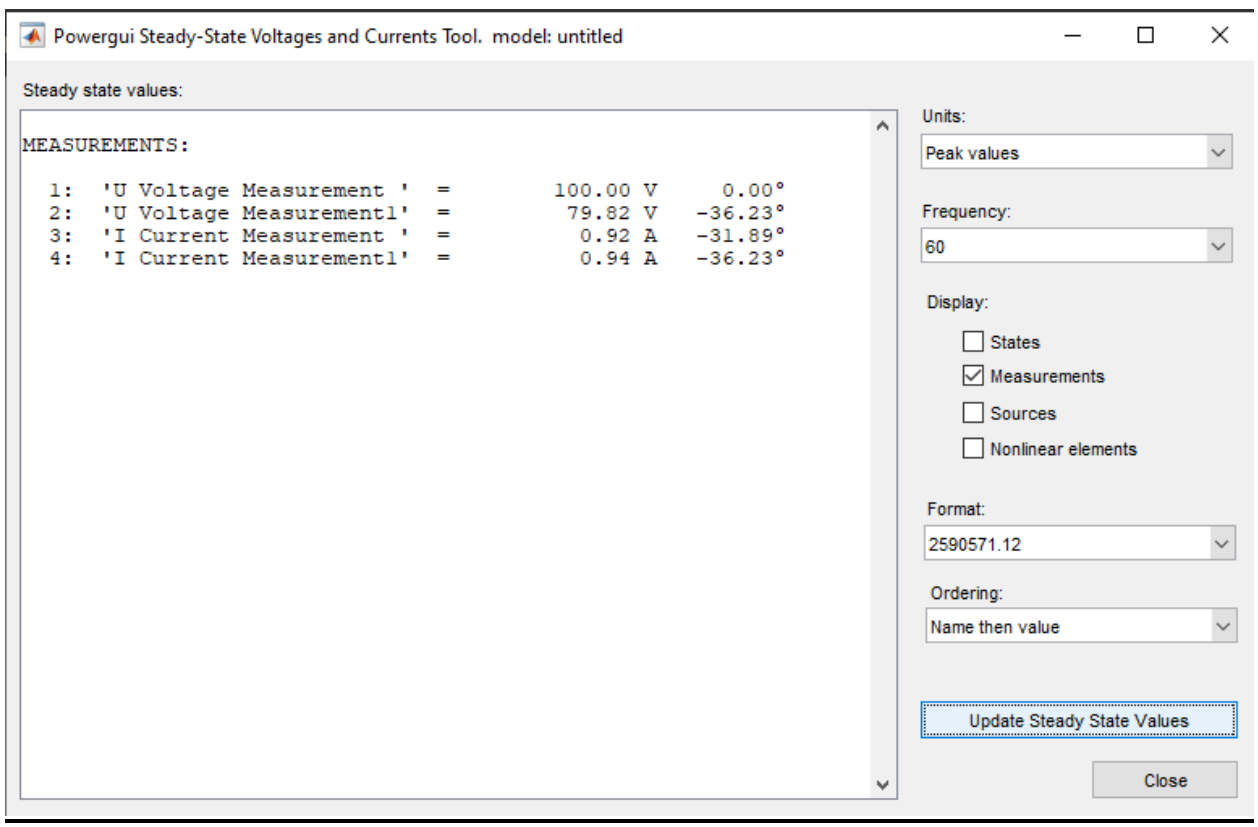


**Figure 10.6 measurement of circuit**

**Input current and voltage:**

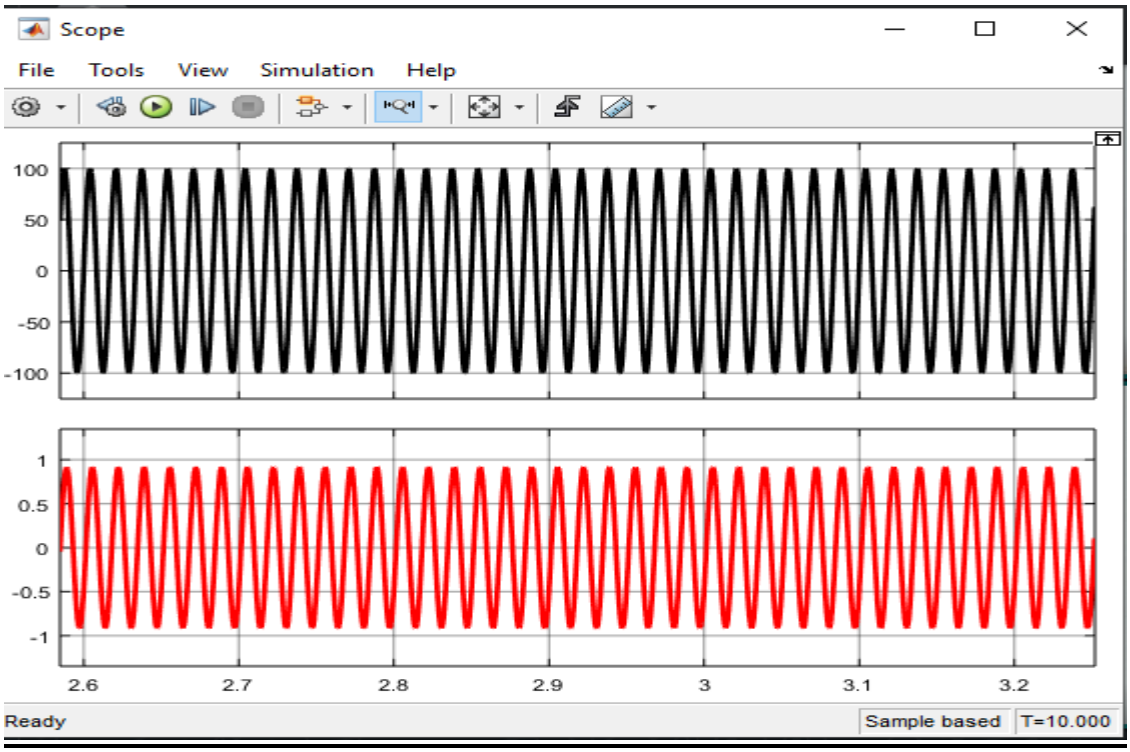


**Figure 10.7 input current and voltage waveform**

**Output current and voltage:**

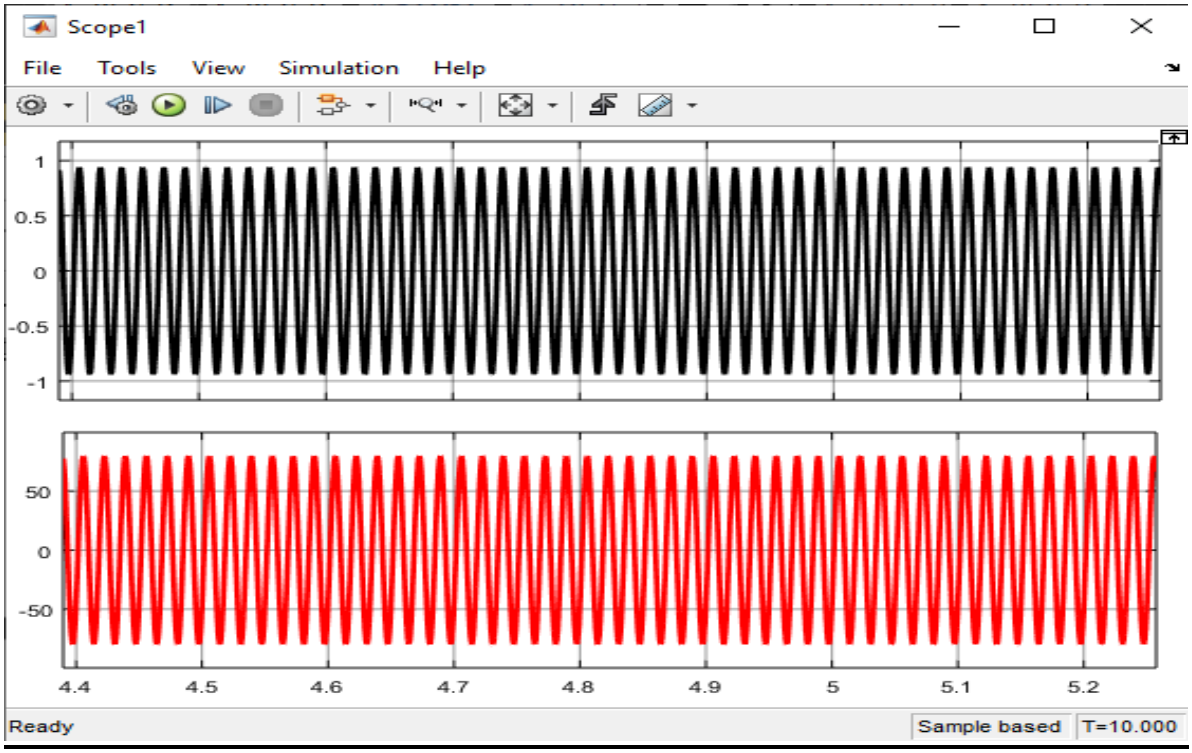


**Figure 10.8 output current and voltage waveform**

**Voltage regulation current:**

Hare za Mobeen

2018-EE-394

For Medium Transmission Line

$L = 190\ km$

$V_S = 100\angle 0$

$V_R = 93.99\angle -21.59$

$r = 0.01273\ \Omega/km$

$l = 0.9337e^{-3}\ H/km$

$c = 12.74e^{-9}\ F/km$

$z = (r + j\omega l) = (r + j2\pi f l)$

$= (0.012734 + j \times 2\pi \times 60 \times 0.9337 \times 10^{-3})$

$= 0.01273 + j0.3527\ \Omega/km$

$Z = z\,length = (0.01273 + j0.3527) \times 190$

$= 2.4187 + j67.013$

$= 67.05\angle 87.93\ \Omega/km$

$y = j\omega c = (j \times 2\pi \times 60 \times 12.74 \times 10^{-9}) = j4.802\ s/km$

$Y = y\,length = j0.912\ m\ s/km = (0.912\ m\angle 90)\ s/km$

$A = \left(1 + \frac{YZ}{2}\right) = 1 + \frac{(0.912 \times 10^{-3}\angle 90)(67.05\angle 87.93)}{2}$

$= 0.969 + j0.0011$

$|A| = 0.969$

$V_{RNL} = \frac{|V_S|}{|A|} = \frac{100}{0.969} = 103.199\ V$

$\%V_{REG} = \frac{|V_{RNL}| - |V_{RFL}|}{|V_{RFL}|} = \frac{103.199 - 93.99}{93.99}$

$= 9.79\%$

**Figure 10.9 voltage regulation**

## Long Transmission line:

Sending end voltage for long length transmission line is:

$Vs = AV_R + BI_R$ and $A = \cosh\gamma l$ ; $B = Zc \sinh\gamma l$. At no load, $I_R$ is zero. So $V_{R(NL)} = V_S / A$.

$$\text{\% age Voltage Regulation} = \frac{\frac{Vs}{A} - VR}{VR} \times 100$$

You are required to measure voltage regulation of single phase medium length transmission line by simulating the circuit in MATLAB Simulink and verify the results by mathematical calculations.

## L=280km

**Input current and voltage:**

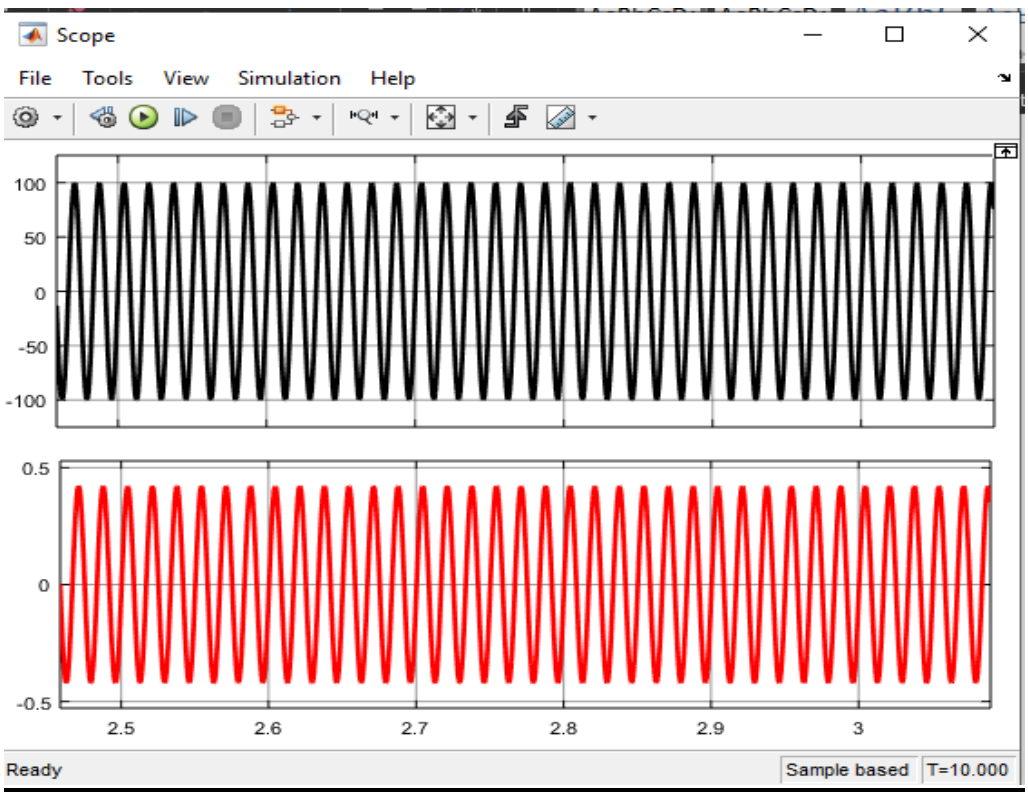


**Figure 10.10 input current and voltage waveform**

**Output current and voltage:**

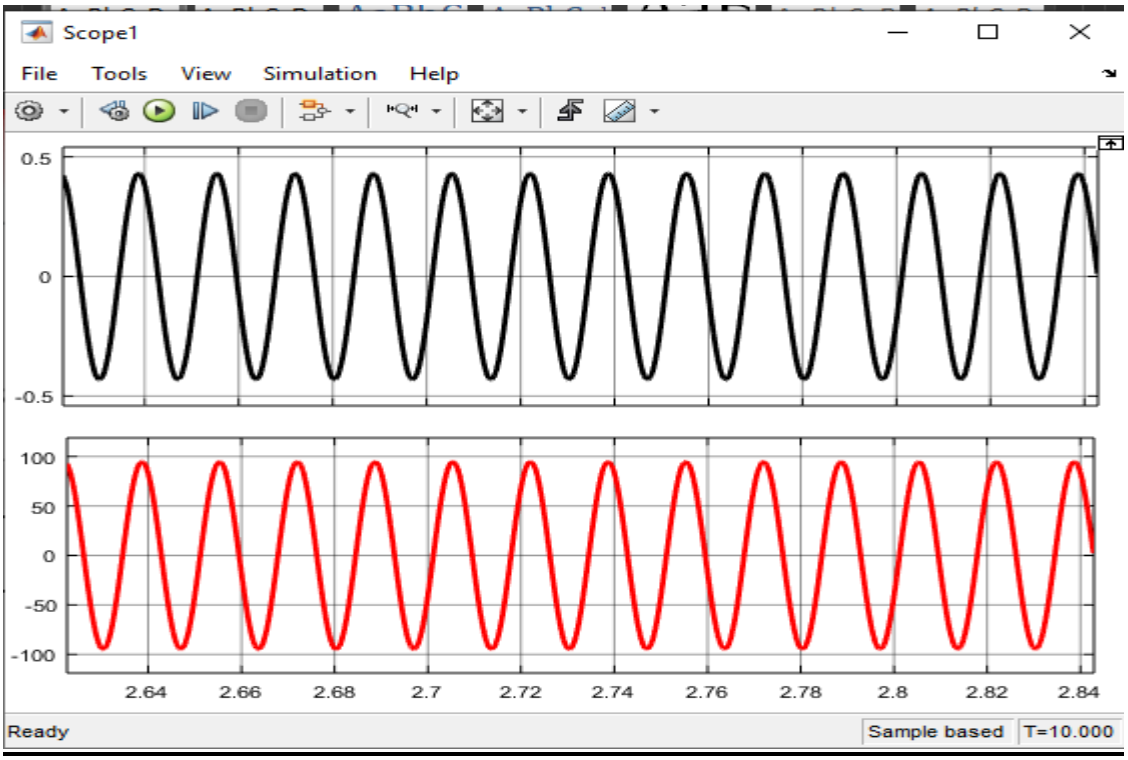


**Figure 10.11 output current and voltage waveform**

**Measurement:**

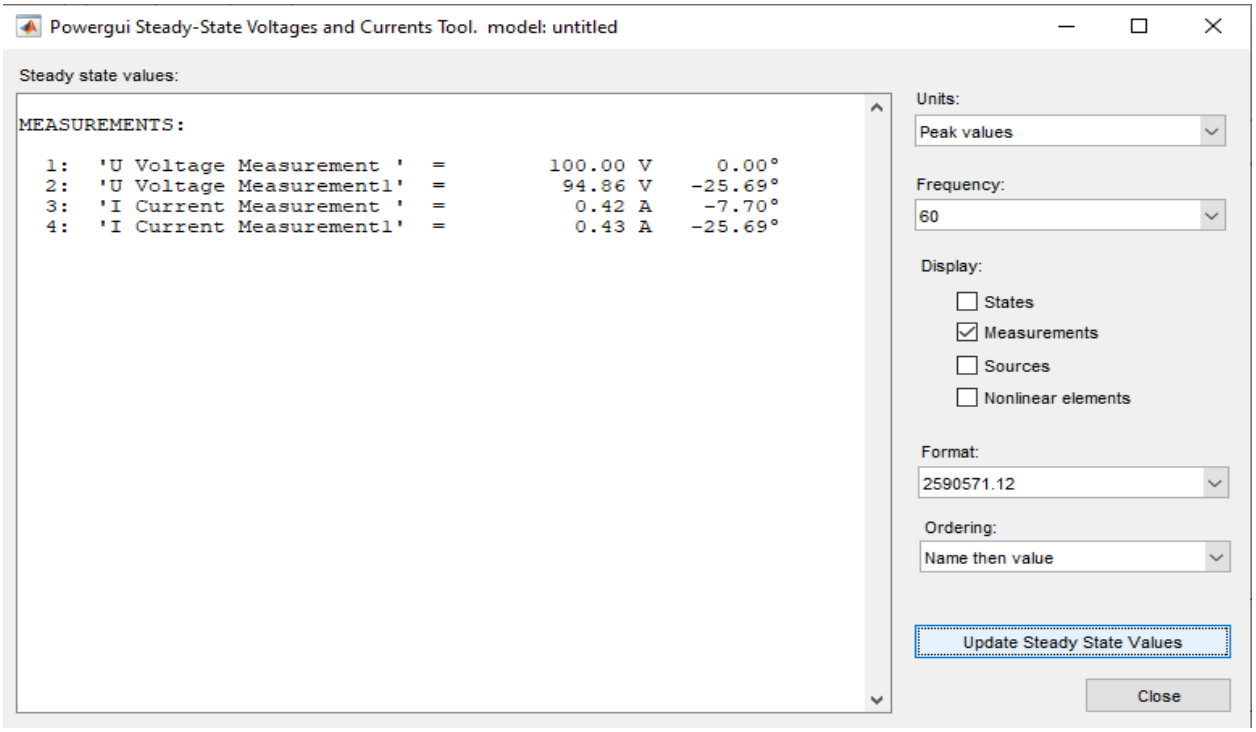


**Figure 10.12 measurement of circuit**

**Voltage regulation:**

Hamza Moeen
for Long Transmission
2018-EE-394

$V_S = 100\angle 0\ V \qquad V_R = 95.10\angle -24.85\ V$

$r = 0.01273\ \Omega/km$

$l = 0.9337e^{-3}\ H/km$

$c = 12.74e^{-9}\ F/km$

length = 280km

$Z = (r + j\omega l) = 0.352\ \angle 87.9\ \Omega/km$

$y = 4.80\times10^{-6}\ \angle 90\ s/km$

$Z_C = \sqrt{\frac{0.352\angle 87.9}{4.80\times10^{-6}\angle 90}} = \sqrt{7.3\times10^{4}\angle -2.1}$

$Z_C = 270.8\angle -1\ \Omega/km$

$\gamma l = \sqrt{zy}\ l = \sqrt{(0.352)\angle 87.9 \times (4.802\times10^{-6}\angle 90)} \times 280km$

$= \sqrt{1.6903\times10^{-6}\angle 177.9} \times 280km$

$= 0.364\angle 88.5 = 9.528\times10^{-3} + 0.3638j\ Pu$

$e^{\gamma l} = e^{9.528\times10^{-3}}\, e^{j0.3638}$

$= 1.0095\angle 0.3638\ rad$

$e^{-\gamma l} = e^{-9.528\times10^{-3}}\, e^{-j0.3638}$

$= 0.9418 + 0.363j$

$= 0.9905\angle -0.3638\ rad$

$= 0.9256 - j0.3524$

$\cosh(\gamma l) = \frac{e^{\gamma l} + e^{-\gamma l}}{2} = \frac{0.9418 + 0.363j + (0.9256 - j0.3524)}{2}$

$= 0.9337 + 0.0053j$

$\cosh(\gamma l) = 0.9337\angle 0.325^\circ$

$A = D = \cosh(\gamma l) = 0.9337\angle 0.325$

$\frac{|V_S|}{|A|} = \frac{100}{0.9337} = 107.100V$

$\%\ VREG = \frac{107.100 - 95.10}{95.10} = 12.6\%$

**Figure 10.13 voltage regulation of long transmission**

## Lab Exercises:

**Q1. Why is voltage regulation negative for capacitive loads?**

Voltage regulation denotes the voltage decrease from no load to full load. We already know that the capacitor supplies the leading current. When the capacitance value grows, the leading angle lowers, which decreases the cosine angle and raises the sin angle, causing the voltage regulation value to be negative.

When there is a leading power factor (capacitive load), the output terminal voltage rises. As a result, positive regulation causes a voltage decrease in the winding, whereas negative regulation causes a voltage increase in the winding.

## Conclusion:

We learnt about voltage regulation of short, long, and medium transmission lines of various lengths in this experiment. When a transmission line delivers a load current, the voltage drop in the line is caused by resistance and inductance (inductive reactance). As a result, the receiving end voltage VR is often lower than the transmitting end voltage VS. Voltage regulation is defined as the ratio of voltages at the transmitting and receiving ends.

| | |
|---|---|
| **Name** | **Hamza Mobeen** |
| **Reg. #** | **2018-EE-394** |
| **Date** | **6/23/2021** |
| **Marks** | |

# EXPERIMENT # 11

## Analysis of system containing Regulating Transformer

## Objective:

To learn the importance of voltage regulation by tap changing transformer on PWS.

## Theory:

Almost all transformers incorporate some means of adjusting their voltage ratio, by adding or removing tapping turns. This adjustment may be made by an on-load tap-changer, or by means of an off-circuit tap-changer, or by the selection of bolted link positions with the transformer disconnected and grounded.

**Off Circuit Tap Changer**

The off-circuit tap-changer is of rather simple design, giving connection to a selected tap in the winding. As the name says it is designed only to be operated only when the transformer is de-energized. The contact pressure may occur to be retained by some kind of spring arrangement and then some vibration is possible.

**On Load Tap Changer (OLTC)**

The on-load tap-changer has to provide uninterrupted current flow during the transition operation from one tap to the other. The current flow must be maintained uninterrupted without partial short-circuiting of the tapped winding.

**Analysis of system Containing Tap Changing Transformer:**

The network is given as for which calculation is to be performed.

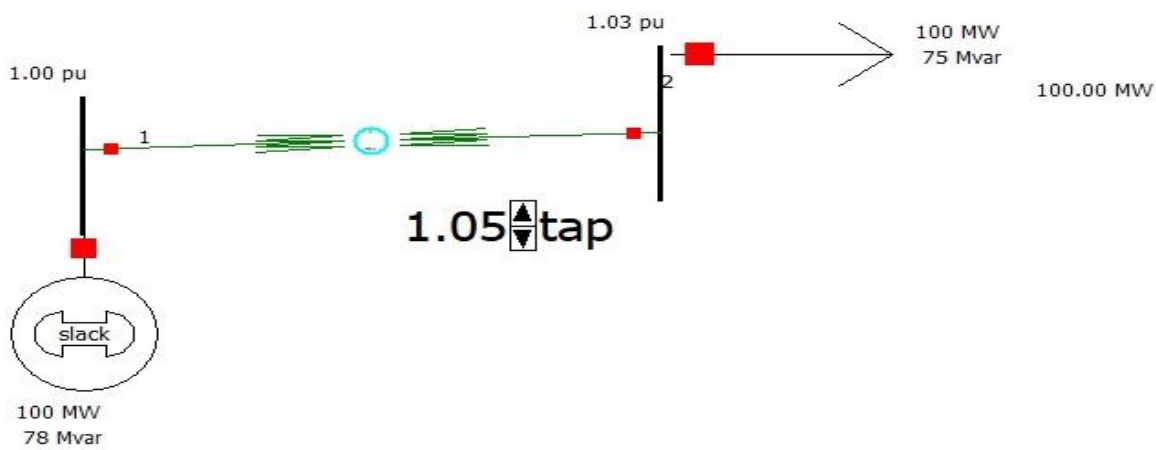


Figure 1: Tap changing transformer circuit

**Regulating Transformer Hand Calculation:**

Evaluate the voltage at bus 2 for various tap changing transformation ratio as given below

For tap changing transformation ratio 1:1

For tap changing transformation ratio .95:1

For tap changing transformation ratio 1.05:1

For tap changing transformation ratio 1:1.05

For tap changing transformation ratio 1:.95

**<u>Off circuit tap changer</u>**

**<u>Simulink:</u>**

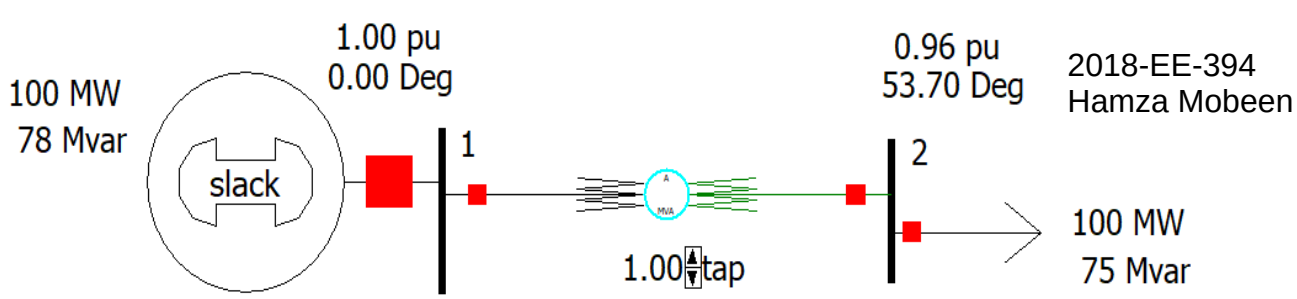


**<u>Figure 11.1 Simulink for regulating transformer</u>**

**For tap changing transformation ratio 1:1**

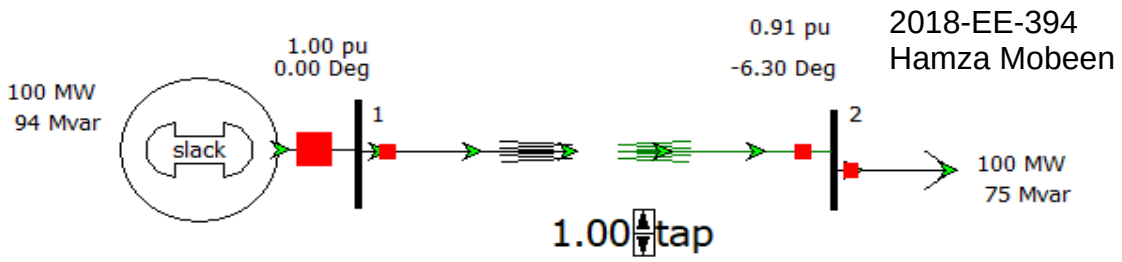


**Figure 11.2 for tap changing 1:1**

**Ybus:**

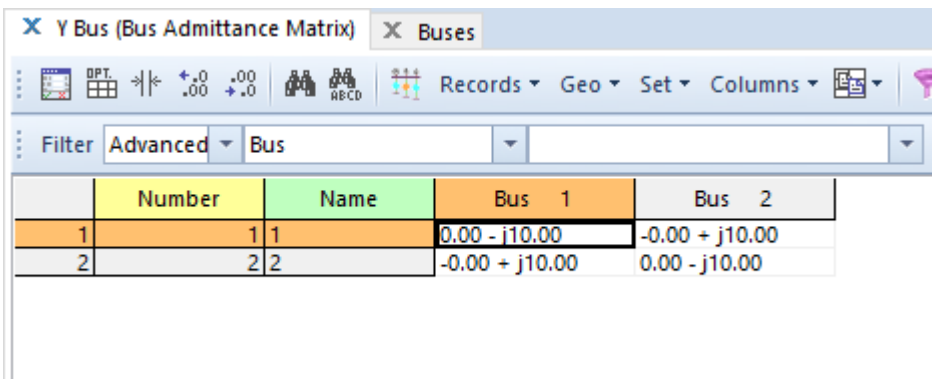


| | Number | Name | Bus 1 | Bus 2 |
|---|---|---|---|---|
| 1 | 1 | 1 | 0.00 - j10.00 | -0.00 + j10.00 |
| 2 | 2 | 2 | -0.00 + j10.00 | 0.00 - j10.00 |

**Figure 11.3 y bus for 1:1 tap changing**

**For tap changing transformation ratio 0.95:1**

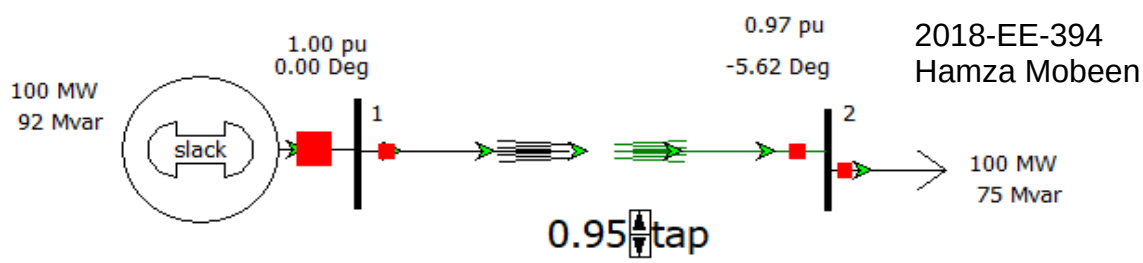


**Figure 11.4 for tap changing 0.95:1**

**Ybus:**

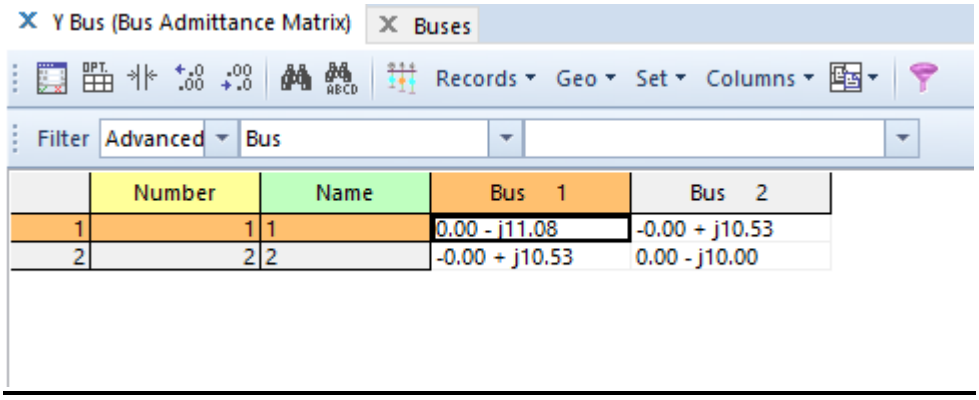


| | Number | Name | Bus 1 | Bus 2 |
|---|---|---|---|---|
| 1 | 1 | 1 | 0.00 - j11.08 | -0.00 + j10.53 |
| 2 | 2 | 2 | -0.00 + j10.53 | 0.00 - j10.00 |

**Figure 11.5 Ybus for 0.95:1 tap changing**

**For tap changing transformation ratio 1.05:1**

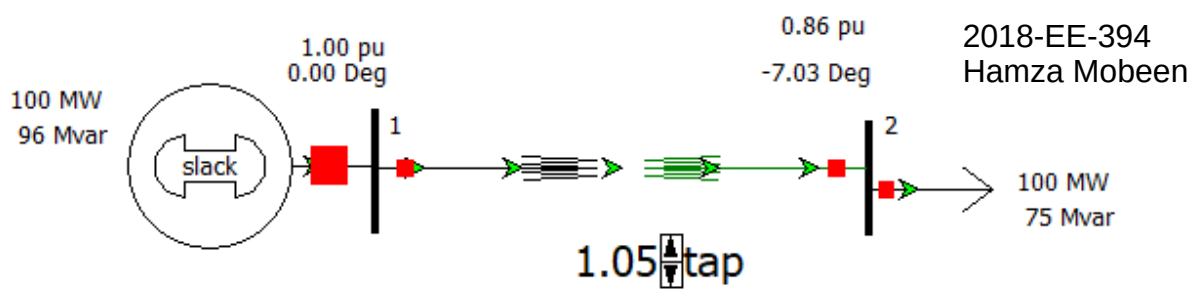


**Figure 11.6 for tap changing 1.05:1**

**Ybus:**

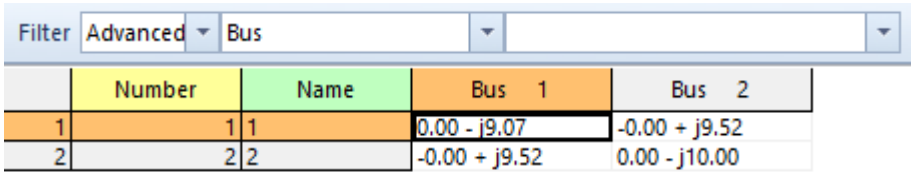


| | Number | Name | Bus 1 | Bus 2 |
|---|---|---|---|---|
| 1 | 1 | 1 | 0.00 - j9.07 | -0.00 + j9.52 |
| 2 | 2 | 2 | -0.00 + j9.52 | 0.00 - j10.00 |

**Figure 11.7 Ybus for tap changing 1.05:1**

**For phase shift angle 30 degree in bus 1:**

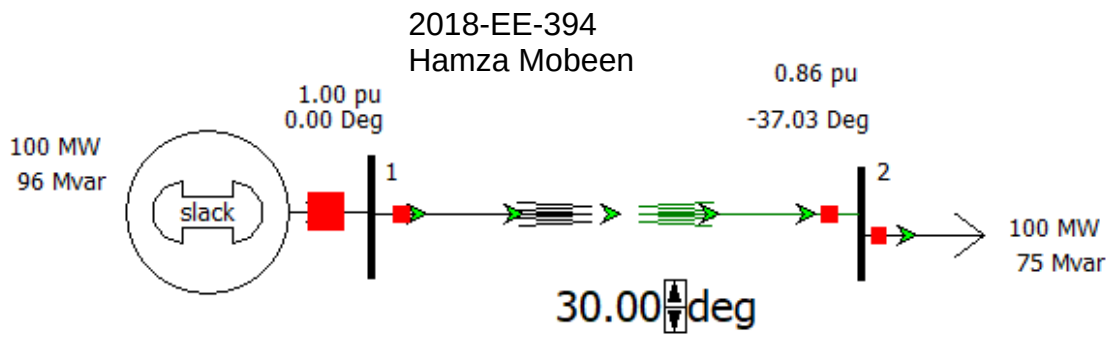


**Figure 11.8 for phase shift of 30 degree**

**Ybus:**

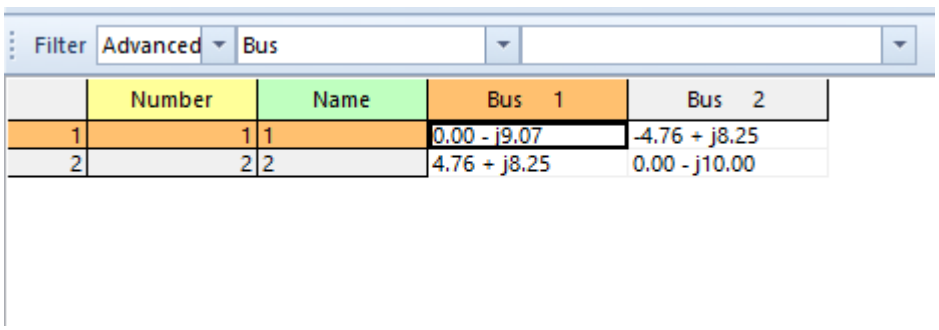

Filter Advanced Bus

| | Number | Name | Bus 1 | Bus 2 |
|---|---|---|---|---|
| 1 | 1 | 1 | 0.00 - j9.07 | -4.76 + j8.25 |
| 2 | 2 | 2 | 4.76 + j8.25 | 0.00 - j10.00 |

**Figure 11.9 Ybus for phase shift angle 3 degree**

**For phase shift angle 60 degree at bus 1:**

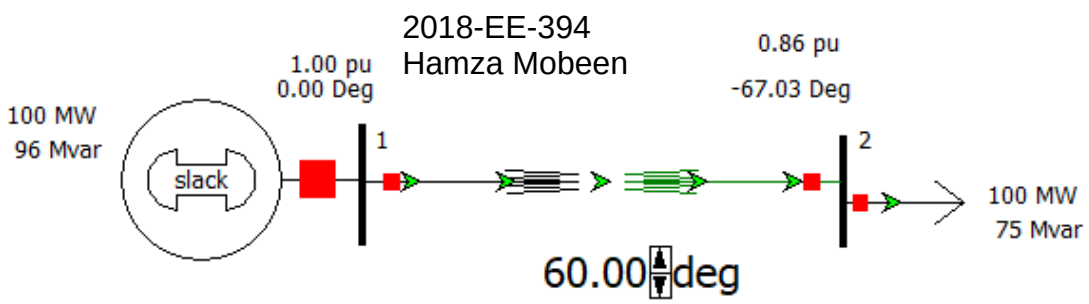


**Figure 11.10 for phase shift angle 60 degree**

**Ybus:**

| | Number | Name | Bus 1 | Bus 2 |
|---|---|---|---|---|
| 1 | 1 | 1 | 0.00 - j9.07 | -8.25 + j4.76 |
| 2 | 2 | 2 | 8.25 + j4.76 | 0.00 - j10.00 |

**Figure 11.11 Ybus for phase angle shift 60 degree**

**For tap changing transformation ratio 1:1.05**

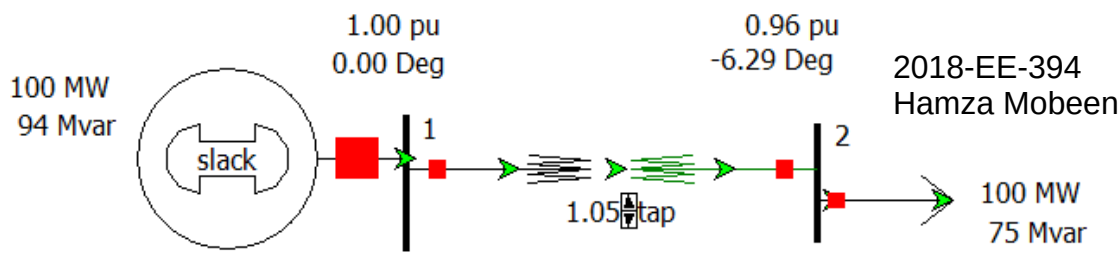


**Figure 11.12 for tap changing 1:1.05**

**Ybus:**

Filter Advanced Bus

| | Number | Name | Bus 1 | Bus 2 |
|---|---|---|---|---|
| 1 | 1 | 1 | 0.00 - j10.00 | -0.00 + j9.52 |
| 2 | 2 | 2 | -0.00 + j9.52 | 0.00 - j9.07 |

**Figure 11.13 Ybus for tap changing 1:1.05**

**For tap changing transformation ratio 1:0.95**

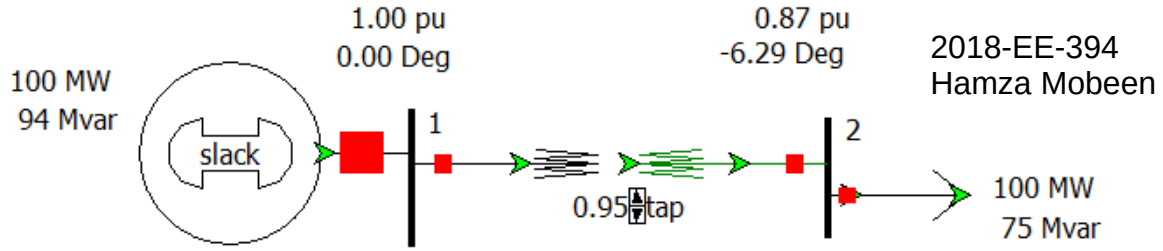


**Figure 11.14 for tap changing 1:0.95**

**Ybus:**

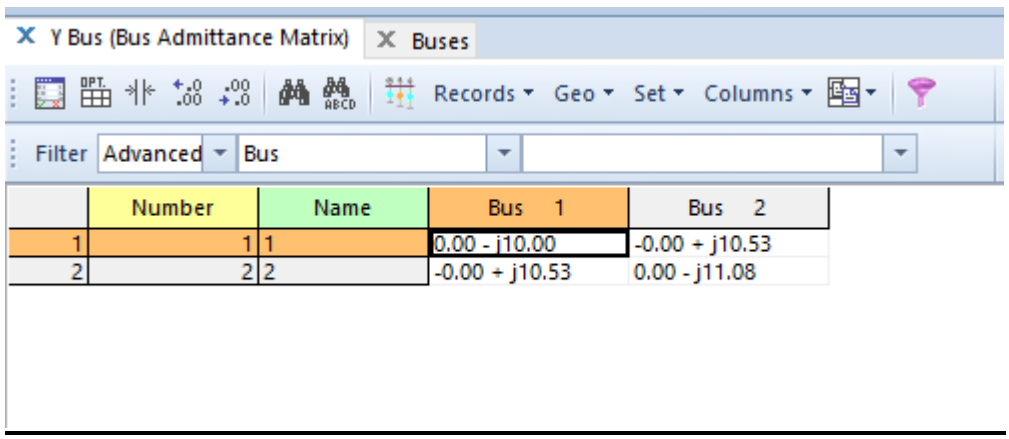


| | Number | Name | Bus 1 | Bus 2 |
|---|---|---|---|---|
| 1 | 1 | 1 | 0.00 - j10.00 | -0.00 + j10.53 |
| 2 | 2 | 2 | -0.00 + j10.53 | 0.00 - j11.08 |

**Figure 11.15 Ybus for tap changing 1:0.95**

**For phase shift angle 30 degree at bus 2**

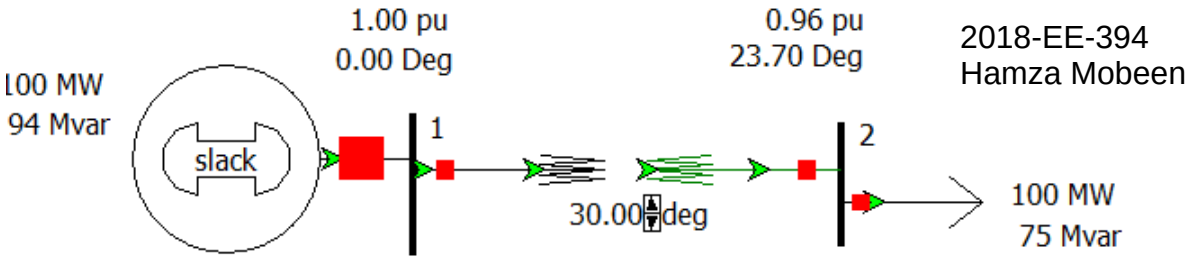


**Figure 11.16 for phase shift angle 30 degree**

**Ybus:**

Filter Advanced Bus

| | Number | Name | Bus 1 | Bus 2 |
|---|---|---|---|---|
| 1 | 1 | 1 | 0.00 - j10.00 | 4.76 + j8.25 |
| 2 | 2 | 2 | -4.76 + j8.25 | 0.00 - j9.07 |

**Figure 11.17 Ybus for phase shift angle 30 degree**

**For phase shift angle 60 degree at bus 2:**

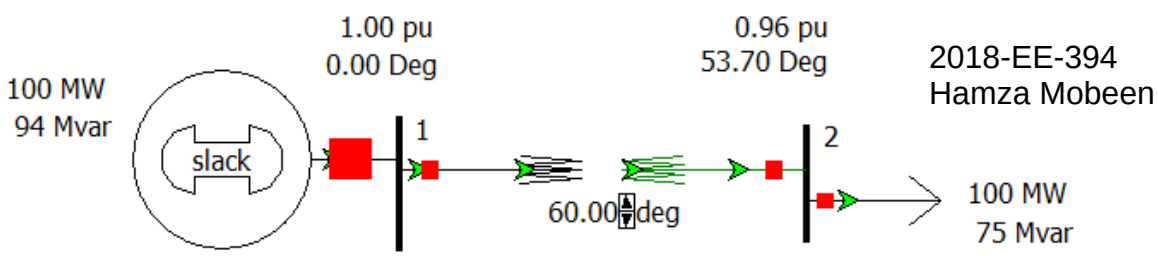


**Figure 11.18 for phase shift angle 60 degree**

**Ybus:**

| | Number | Name | Bus 1 | Bus 2 |
|---|---|---|---|---|
| 1 | 1 | 1 | 0.00 - j10.00 | 8.25 + j4.76 |
| 2 | 2 | 2 | -8.25 + j4.76 | 0.00 - j9.07 |

**Figure 11.19 Ybus for phase shift angle 60 degree**

**Using PWS:**

Draw online diagram at PWS

In edit mode go to draw →Field → Transformation Field

**Manual Control:**

Now click on transformer on which you want to have the tap changer. A dialogue box will open. In type of field option select off nominal Tap Ratio (PWS connects the tap changer on the form side of transformer) e.g. if a transformer is connected from bus 1 to bus 2, PWS will attach tap on winding which is connected to bus 1 and if transformer is connected from bus 2 to 1, PWS will attach tap on winding which is connected to bus 2.

Corroborate your theoretical calculation of Y bus and V2 with the PWS results for different tap changing transformer ratios.

**Automatic Control:**

Double click on transformer in transformer control check automatic control enabled and in change automatic control option select voltage regulation as automatic control type. When transformer tap control is automatic control then tap changing symbol is drawn on tap changing side of transformer.

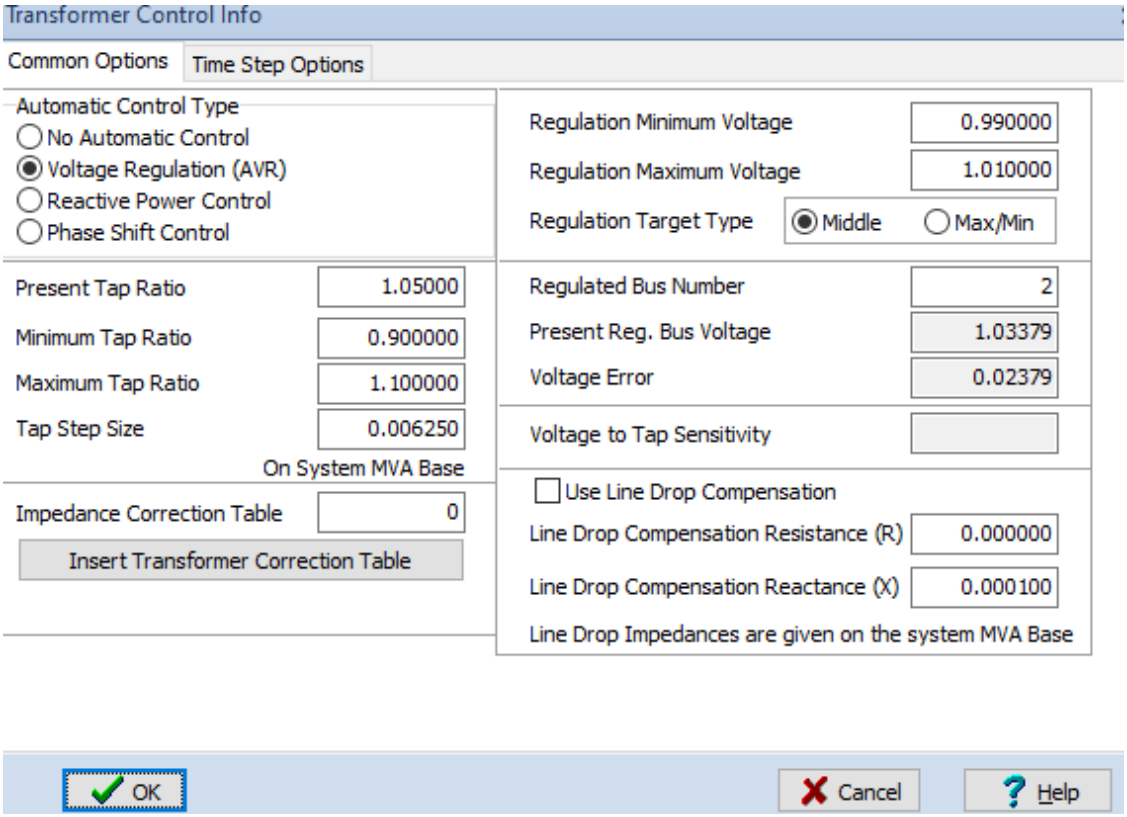


Figure 2: Automatic Control of Transformer

**Automatic Control:**

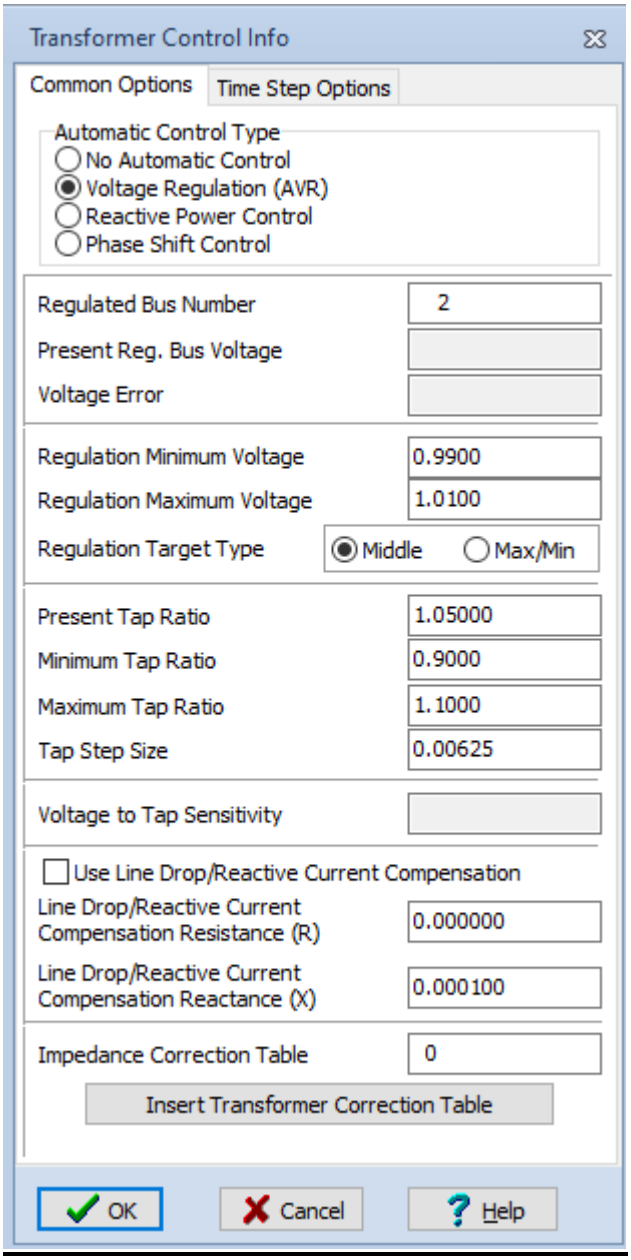


**Figure 11.20 atomic control setting**

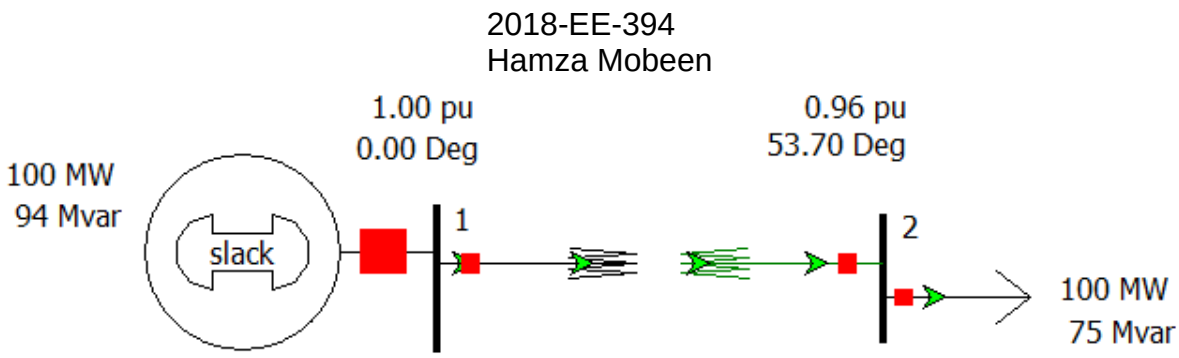


**Figure 11.21 transformer atomic control**

## Conclusion:

In this lab, we learnt about voltage control on PWS by adjusting the tap changing on the transformer. We may change the per unit voltages and angles of the buses linked to the transformer by adjusting the transformer's tap ratio. We also examined the effect of transformer phase shift on bus voltages and angles, and the findings are shown above.

| | |
|---|---|
| Name | **Hamza Mobeen** |
| Reg.no. | **2018-EE-394** |
| R.Date | **06-30-2021** |

# Experiment#12

## Power flow Solution using Gauss-Seidel method using Power world Simulator

### Objective:

To find load flow studies without and with generator buses using Gauss Seidel Method.

### Introduction:

The Gauss-Seidel method is the modification of the gauss-iteration method. This modification reduces the number of iteration. In this methods the value of unknown immediately reduces the number of iterations, the calculated value replace the earlier value only at the end of the iteration. .Because of it, the gauss-seidel methods converges much faster than the Gauss methods. In gauss seidel methods the number of iteration method requires obtaining the solution is much less as compared to Gauss method.

Let us understand the Gauss-Seidel Method with the help of an example. Consider the total current entering the $k^{th}$ bus of an 'n' bus system is given by the equation shown below.

$$I_k = Y_{k1}V_1 + Y_{k2}V_2 + \dots\dots + Y_{kn}V_n = \sum_{i=1}^{n} Y_{ki}V_i \dots\dots(1)$$

The complex power injected into the $k^{th}$ bus is given as

$$S_k = P_k + jQ_k = V_k I_k \dots\dots(2)$$

The complex conjugate of the above equation becomes

$$S_k = P_k - jQ_k = V_k I_k \dots\dots(3)$$

$$I_k = \frac{1}{V_k}(P_k - jQ_k) \dots\dots(4)$$

Elimination of $I_k$ from the equation (1) and (4) gives

$$Y_{k1}V_1 + Y_{k2}V_2 + \ldots\ldots + Y_{kk}V_k + \ldots\ldots + Y_{kn}V_n = \frac{1}{V_k}(P_k - jQ_k) \ldots\ldots\ldots (5)$$

Therefore, the voltage at any bus 'k' where $P_k$ and $Q_k$ are specified is given by the equation shown below.

$$V_k = \frac{1}{Y_{kk}}\left[\frac{P_k - jQ_k}{V_k} - \sum_{\substack{i=1 \\ i \neq k}}^{n} Y_{ki}V_i\right] \ldots\ldots\ldots (6)$$

Equation (6) shown above is the major part of the iterative algorithm.

At the bus 2, the equation becomes

$$V_2 = \frac{1}{Y_{22}}\left[\frac{P_2 - jQ_2}{V_2} - Y_{21}V_1 - Y_{23}V_3 - \ldots\ldots - Y_{2n}V_n\right] \ldots\ldots\ldots (7)$$

At the bus 3, the equation becomes

$$V_3 = \frac{1}{Y_{33}}\left[\frac{P_3 - jQ_3}{V_3} - Y_{31}V_1 - Y_{32}V_2 - Y_{34}V_4 \ldots\ldots - Y_{3n}V_n\right] \ldots\ldots\ldots (8)$$

Now for the $k^{th}$ bus, the voltage at the $(r + 1)^{th}$ iteration is given by the equation shown below.

$$V_k^{(r+1)} = \frac{1}{Y_{kk}}\left[\frac{P_k - jQ_k}{V_k^{(r)}} - \sum_{i=1}^{k-1} Y_{ki}\, V_i^{(r+1)} - \sum_{i=k+1}^{n} Y_{ki}\, V_1^{(r)}\right] \ldots\ldots (9)$$

In the above equation, the quantities $P_k$, $Q_k$, $Y_{kk}$ and $Y_{ki}$ are known, and they do not vary during the iteration cycle.

## Task:

Figure shows the one-line diagram of a three-bus power system with generation at bus1. The magnitude of voltage at bus1 is adjusted to 1.025 per unit. The scheduled loads at buses 2 & 3 are as marked on the diagram. Line impedances are marked in per unit on a 100MVA base

i). Using Gauss-Seidal method, determine the phasor values of the voltage at the load buses 2 & 3 (PQ buses) accurate to 4 decimal places.

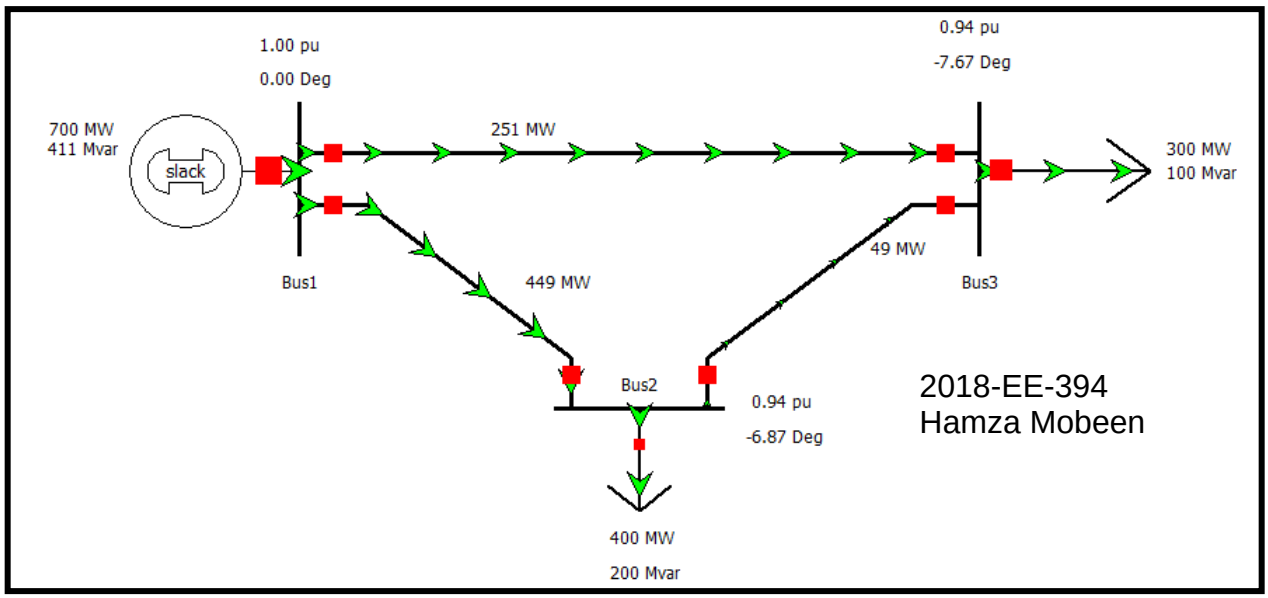


## Phasor voltages:

| | Number | Name | Area Name | Nom kV | PU Volt | Volt (kV) | Angle (Deg) | Load MW | Load Mvar |
|---|---|---|---|---|---|---|---|---|---|
| 1 | 1 | Bus1 | 1 | 138.00 | 1.00000 | 138.000 | 0.00 | | |
| 2 | 2 | Bus2 | 1 | 138.00 | 0.93901 | 129.584 | -6.87 | 400.00 | 200.00 |
| 3 | 3 | Bus3 | 1 | 138.00 | 0.93854 | 129.518 | -7.67 | 300.00 | 100.00 |

## Y-bus:

| | Number | Name | Bus 1 | Bus 2 | Bus 3 |
|---|---|---|---|---|---|
| 1 | 1 | Bus1 | 0.00 - j60.00 | -0.00 + j40.00 | -0.00 + j20.00 |
| 2 | 2 | Bus2 | -0.00 + j40.00 | 0.00 - j80.00 | -0.00 + j40.00 |
| 3 | 3 | Bus3 | -0.00 + j20.00 | -0.00 + j40.00 | 0.00 - j60.00 |

**Theoretical Calculations:**

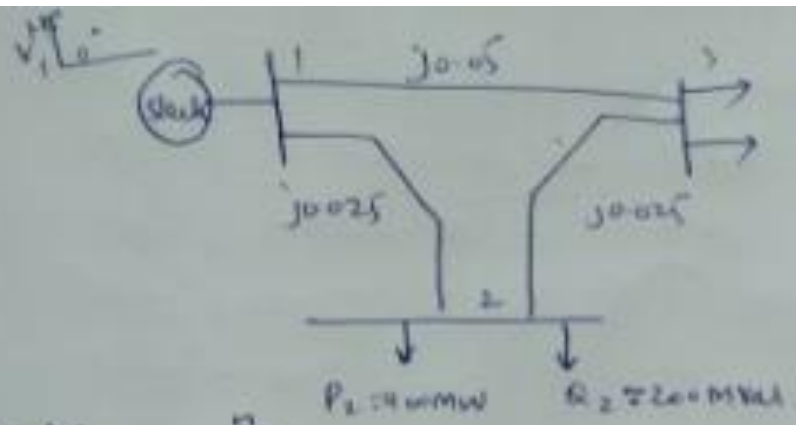


$$V_i = \frac{K_i}{V_i^*} - \sum_{\substack{p=1 \\ p \neq i}}^{n} L_{ip} V_p$$

$$Y_{12} = Y_{21} = -\frac{1}{j0.025} = 40j$$

$$Y_{13} = Y_{31} = -\frac{1}{j0.05} = 20j$$

$$Y_{23} = Y_{32} = -\frac{1}{j0.025} = 40j$$

$$Y_{bus} = \begin{bmatrix} -j60 & 40j & 20j \\ 20j & -80j & 40j \\ 20j & 40j & -60j \end{bmatrix}$$

$$V_i = \frac{K_i}{V_i^*} - \sum_{\substack{p=1 \\ p \neq i}} L_{ip} V_p$$

$$K_1 = \frac{P_{1,sch} - jQ_{1,sch}}{Y_{11}}, \quad L_{ip} = \frac{Y_{ip}}{Y_{ii}}$$

$$K_2 = \frac{P_{2,sch} - jQ_{2,sch}}{Y_{22}}, \quad \frac{-4+j2}{-80j} = 0.025 - 0.05j$$

$$K_3 = \frac{P_{3,sch} - jQ_{3,sch}}{Y_{33}} = \frac{-3+j1}{-60j} = -0.0167 - 0.05j$$

$$S_{1,sch} = P_{1,sch} + jQ_{1,sch}$$

$$S_{2,sch} = (P_{2,g} - P_{2,d}) + j(Q$$

$$= (0-400) + j(0-200$$

$$= \frac{(-400 - j200)}{100MVA} \text{ p}$$

$$S_{2,sch} = (-4 - j2) \text{ pu}$$

$$S_{3,sch} = \frac{(P_{3,g} - P_{3,d}) + jQ_{3}}{\text{Base MVA}}$$

$$= \frac{(0-300) + j(0-100)}{100} \text{ p}$$

$$= (-3 - j1) \text{ pu}$$

$$L_{21} = \frac{Y_{21}}{Y_{22}} = \frac{40j}{-80j} = -0.5$$

$$L_{23} = \frac{Y_{23}}{Y_{22}} = \frac{40j}{-80j} = -0.5$$

$$L_{31} = \frac{Y_{31}}{Y_{33}} = \frac{20j}{-60j} = 0.333$$

$$L_{32} = \frac{Y_{32}}{Y_{33}} = \frac{40j}{-60j} = -0.667$$

$$V_1 = 1.025 \angle 0^\circ$$

$$V_2 = V_3 = 1 \angle 0^\circ$$

**1st iteration:**

$$V_2' = \frac{k_2}{V_2^\circ} - (L_{21}V_1 + L_{23}V_3^\circ) = \frac{-0.025-0.05j}{1\angle 0^\circ} - (-0.5(1.025) + (-0.5)(1\angle 0))$$

$$V_2' = 0.9875 - 0.05j = 0.9887 \angle -2.89^\circ$$

$$V_3' = \frac{k_3}{V_3^\circ} - (L_{31}V_1 + L_{32}V_2')$$

$$= -0.01667 - 0.05j - (-0.333 \angle 0^\circ) + (-0.667 \angle 0.9887 \angle -2.8)$$

$$= 0.9783 \angle -4.89^\circ$$

**2nd iteration**

$$V_2^2 = \frac{k_2}{V_2'} - (L_{21}V_1 + L_{23}V_3') = \frac{-0.025-0.05j}{-0.9875-0.05j} - (-0.5(1\angle 0) + (0.5)(0.978\angle -4.8$$

$$= 0.0565 \angle -113.66 - (0.988 \angle 177.58)$$

$$V_2^2 = 0.9689 \angle -5.35^\circ$$

$$V_3^2 = \frac{k_3}{V_3'} - (L_{31}V_1 + L_{32}V_2^2)$$

$$= \frac{-0.01667 - 0.05j}{0.9783 \angle -4.89^\circ} - (-0.33(1\angle 0^\circ) - 0.667(0.968 \angle -5.35))$$

$$= 0.9697 \angle -6.672^\circ$$

3rd iteration

$$V_2^3 = \frac{k_2}{V_2^2} - (L_{21}V_1 + L_{23}V_3^2)$$

$$= \frac{-0.025 - 0.05j}{0.9689 \angle -5.35^\circ} - (-.05(1\angle 0^\circ) - .05(0.9697\angle -6.672))$$

$$= 0.967 \angle -6.5^\circ$$

$$V_3^3 = \frac{k_3}{V_3^2} - (L_{31}V_1 + L_{32}V_2^3)$$

$$= \frac{-0.01667 - 0.05j}{0.9697 \angle -6.672} - (-0.333(1\angle 0^\circ) - 0.667(0.967\angle -5))$$

$$V_3^3 = 0.966 \angle -7.45^\circ$$

**Results:**

| Iteration | Quantities | Software | Calculated |
|---|---|---|---|
| Initial | $V_1^0$ | $1.025<0^0$ | $1.025<0^0$ |
| | $\mathbf{V_2^0}$ | $1<0^0$ | $1<0^0$ |
| | $\mathbf{V_3^0}$ | $1<0^0$ | $1<0^0$ |
| 1st | $V_1$ | $1.025<0^0$ | $1.025<0^0$ |
| | $\mathbf{V_2^1}$ | $0.9390<-6.87^0$ | $0.9887<-2.89^0$ |
| | $\mathbf{V_3^1}$ | $0.9385<-7.67^0$ | $0.9783<-2.89^0$ |
| 2nd | $V_1$ | $1.025<0^0$ | $1.025<0^0$ |
| | $\mathbf{V_2^2}$ | $0.9390<-6.87^0$ | $0.9689<-5.35^0$ |
| | $\mathbf{V_3^2}$ | $0.9385<-7.67^0$ | $0.9697<-6.672^0$ |
| Final | $V_1$ | $1.025<0^0$ | $1.025<0^0$ |
| | $\mathbf{V_2^3}$ | $0.9390<-6.87^0$ | $0.967<-6.5^0$ |
| | $\mathbf{V_3^3}$ | $0.9385<-7.67^0$ | $0.966<-7.45^0$ |

## Conclusion:

In this lab, we learn about the Gauss seidel method. Gauss-Seidel (G-S) method is one of the simplest iterative method. It is a modification of Gauss-Iterative method. This modification will reduce the numbers of iterations. So, it is suitable for the power flow study of small power system. At the end we simulate this model in PWS software and

| | |
|---|---|
| Name | **Hamza Mobeen** |
| Reg.no. | **2018-EE-394** |
| R.Date | **01-07-2021** |

# Experiment#13

## Power flow Solution by Newton Raphson method using Power world Simulator

### Objective:

To find load flow studies with PV and PQ buses using Newton Raphson Method.

### Introduction:

**Newton Raphson Method** is an iterative technique for solving a set of various nonlinear equations with an equal number of unknowns. There are two methods of solutions for the load flow using Newton Raphson Method. The first method uses rectangular coordinates for the variables while the second method uses the polar coordinate form. Out of these two methods the polar coordinate form is used widely.

Let us understand this method with the help of the equations.

$$S_i = P_i + jQ_i = V_i \sum_{k=1}^{n} V_{ik} V_k \quad .....(1)$$

$$S_i = \sum_{k=1}^{n} (V_i\, V_k\, Y_{ik}) \Big/ (\delta_i - \delta_k - \theta_{ik}) \quad .....(2)$$

$$P_i = \sum_{k=1}^{n} (V_i\, V_k\, Y_{ik}) \cos(\delta_i - \delta_k - \theta_{ik}) \quad .....(3)$$

$$Q_i = \sum_{k=1}^{n} (V_i\, V_k\, Y_{ik}) \sin(\delta_i - \delta_k - \theta_{ik}) \quad .....(4)$$

The above equation (3) and (4) can also be written as shown below.

$$P_i = V_i V_i Y_{ii} \cos\theta_{ii} + \sum_{\substack{k=1 \\ k\neq 1}}^{n} (V_i V_k Y_{ik}) \cos(\delta_i - \delta_k - \theta_{ik}) \ldots\ldots (5)$$

$$Q_i = -V_i V_i Y_{ii} \cos\theta_{ii} + \sum_{\substack{k=1 \\ k\neq 1}}^{n} (V_i V_k Y_{ik}) \sin(\delta_i - \delta_k - \theta_{ik}) \ldots\ldots (6)$$

$$\text{If } \Delta P_i = P_{i\,(sp)} - P_{i\,(cal)} \ldots\ldots (7)$$

We have $\Delta f = J\,\Delta X$

$$\Delta Q_i = Q_{i\,(sp)} - Q_{i\,(cal)}$$

then I = 1, 2, ….n, I ≠ slack, and if

Then I = 1, 2, ….n, i ≠ slack, i ≠ PV bus

Where, the subscripts sp and cal denote the specified and calculated values, respectively, then the equation (7) can be written as shown below.

$$\begin{bmatrix} \Delta P^{(i)} \\ \Delta Q^{(i)} \end{bmatrix} = \begin{bmatrix} J_1^{(i)} & J_2^{(i)} \\ J_3^{(i)} & J_3^{(i)} \end{bmatrix} \begin{bmatrix} \Delta\delta^{(i)} \\ \Delta|V^{(i)}| \end{bmatrix}$$

## Flow chart of Newton Raphson method:

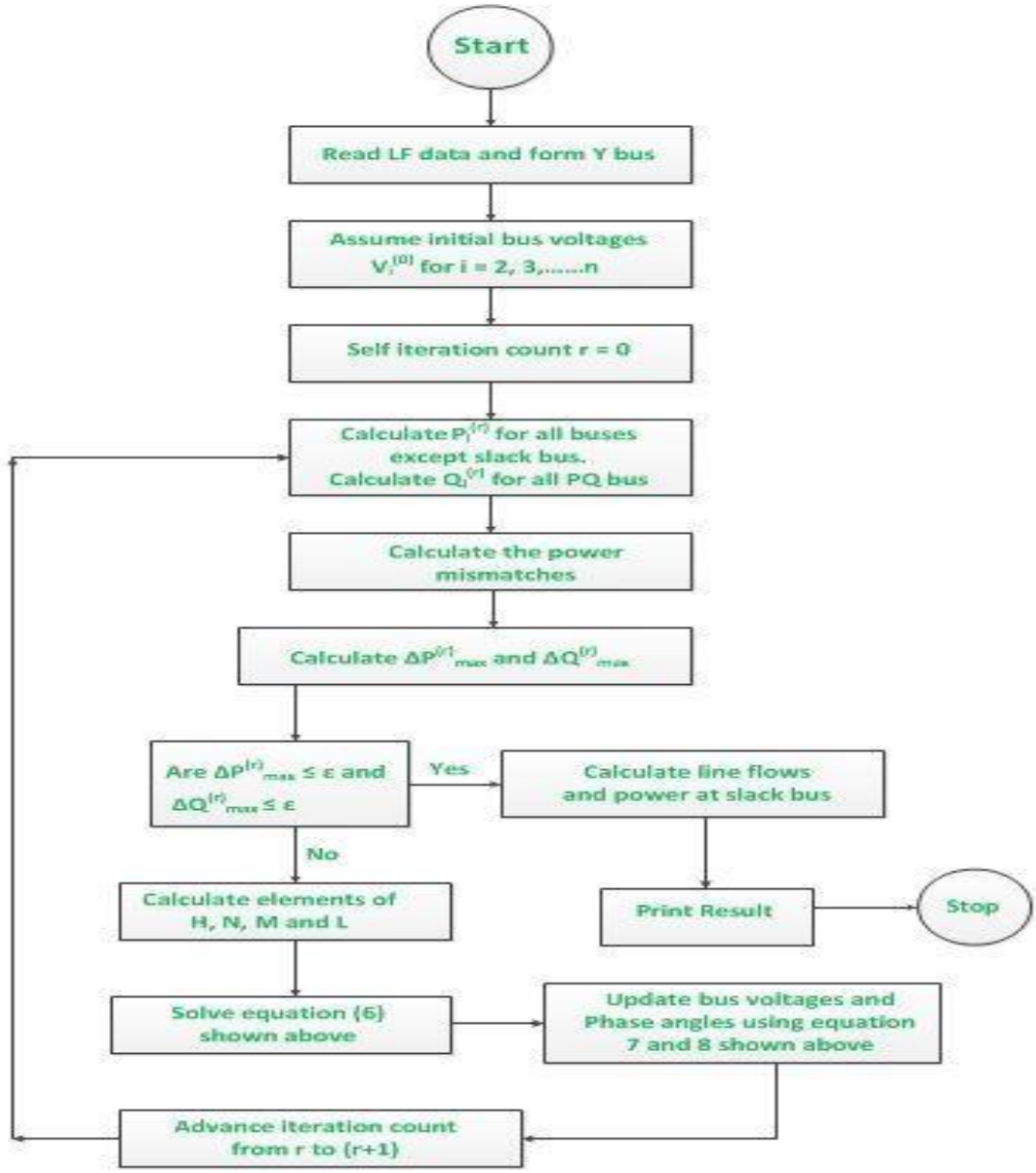


## Limitations of Newton Raphson Method

The various limitations are given below.

- This solution technique is difficult.
- It takes longer time as the elements of the Jacobian are to be computed for each iteration.
- The computer memory requirement is large

## Task#01:

By using Newton Raphson method, determine the value of phasor V2 and V3

## PWS model:

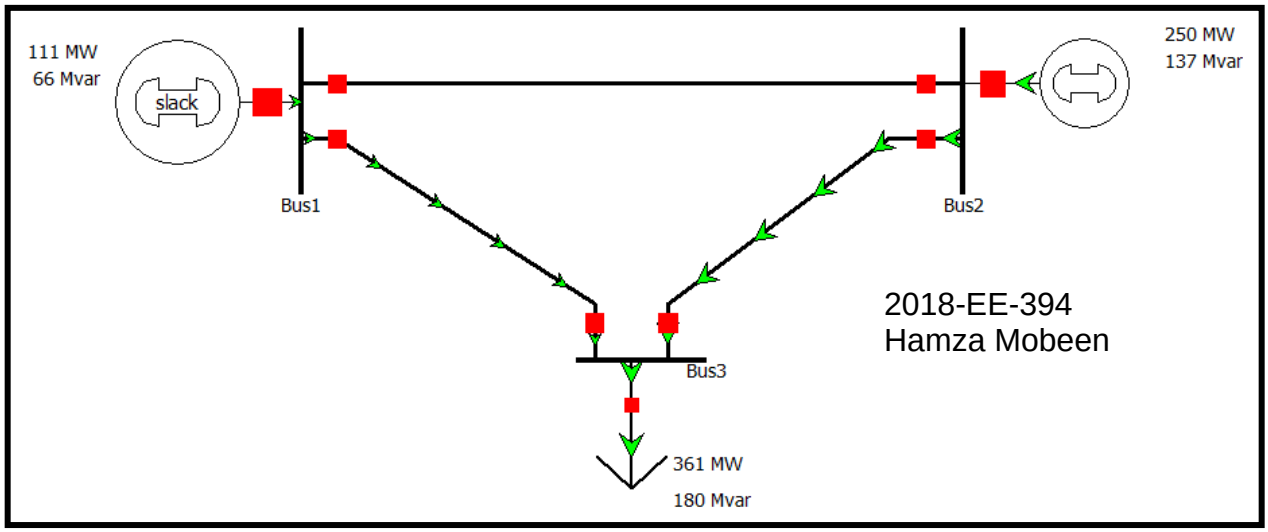


## Y-bus:

| | Number | Name | Bus 1 | Bus 2 | Bus 3 |
|---|---|---|---|---|---|
| 1 | 1 | Bus1 | 0.00 - j75.00 | -0.00 + j50.00 | -0.00 + j25.00 |
| 2 | 2 | Bus2 | -0.00 + j50.00 | 0.00 - j100.00 | -0.00 + j50.00 |
| 3 | 3 | Bus3 | -0.00 + j25.00 | -0.00 + j50.00 | 0.00 - j75.00 |

## Phasor voltages:

| | Number | Name | Area Name | Nom kV | PU Volt | Volt (kV) | Angle (Deg) | Load MW | Load Mvar | Gen MW | Gen Mvar |
|---|---|---|---|---|---|---|---|---|---|---|---|
| 1 | 1 | Bus1 | 1 | 138.00 | 1.00000 | 138.000 | 0.00 | | | 111.08 | 66.23 |
| 2 | 2 | Bus2 | 1 | 138.00 | 1.00022 | 138.030 | 0.08 | | | 250.00 | 137.22 |
| 3 | 3 | Bus3 | 1 | 138.00 | 0.97422 | 134.442 | -2.78 | 361.00 | 180.50 | | |

## Jacobian matrices:

| | Number | Name | Jacobian Equation | Angle Bus 1 | Angle Bus 2 | Angle Bus 3 | Volt Mag Bus 1 | Volt Mag Bus 2 | Volt Mag Bus 3 |
|---|---|---|---|---|---|---|---|---|---|
| 1 | 1 | Bus1 | Real Power | 1.00 | | | | | |
| 2 | 2 | Bus2 | Real Power | | 98.67 | -48.66 | | 2.50 | 2.49 |
| 3 | 3 | Bus3 | Real Power | | -48.66 | 72.99 | | -2.43 | -3.71 |
| 4 | 1 | Bus1 | Slack | | | | 1.00 | | |
| 5 | 2 | Bus2 | Voltage Magnitude | | | | | 1.00 | |
| 6 | 3 | Bus3 | Reactive Power | | 2.43 | -3.61 | | -48.65 | 71.21 |

**Theoretical calculation:**

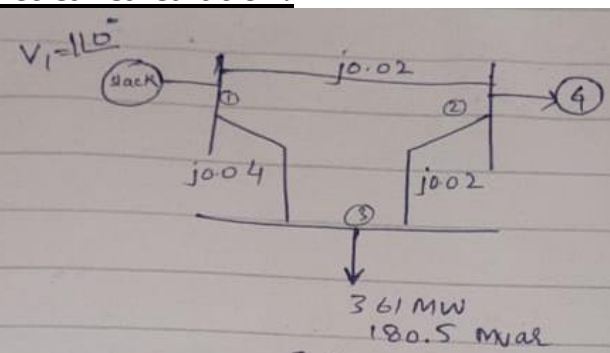


$$Y_{bus} = \begin{bmatrix} -j75 & j50 & j25 \\ j50 & -j100 & j50 \\ j25 & j50 & -j75 \end{bmatrix}$$

In polar form,

$$Y_{bus} = \begin{bmatrix} 75\angle -1.57 & 50\angle 1.57 & 25\angle 1.57 \\ 50\angle 1.57 & 100\angle -1.57 & 50\angle 1.57 \\ 25\angle 1.57 & 50\angle 1.57 & 75\angle -1.57 \end{bmatrix}$$

$$P_2^{sch} = \frac{250-0}{100} = 2.5 \text{ pu.}$$

$$P_3^{sch} = \frac{0-361}{100} = -3.61 \text{ pu}$$

$$Q_3^{sch} = \frac{0-180.5}{100} = -1.8805 \text{ pu.}$$

$$P_2 = Y_{21} V_1 V_2 \cos(\theta_{21} - \delta_2 + \delta_1) + Y_{22} |V_2|^2 \cos(\theta_{22}$$
$$+ Y_{23} |V_2| |V_3| \cos(\theta_{23} - \delta_2 + \delta_3)$$

$$P_3 = |Y_{31}| |V_3| |V_1| \cos(\theta_{31} - \delta_3 + \delta_1) +$$
$$Y_{32} |V_3| |V_2| \cos(\theta_{32} - \delta_3 + \delta_2) + Y_{33} |V_3|^2 \cos(\theta_{33}$$

$$Q_3 = -\Big[|Y_{31}||V_3||V_1|\sin(\theta_{31} - \delta_3 + \delta_1) + |Y_{32}||V_3||V_2|\sin(\theta_{32} - \delta_3 + \delta_2) + |Y_{33}||V_3|^2\sin(\theta_{33})\Big]$$

$$P_2^0 = (50)(1)(1.03)\cos(1.57) + 100(1.03)^2\cos(-1.57) + 50(1.03)(1)\cos(1.57)$$

$$P_2^0 = 0.0904$$

$$P_3^0 = (25)(1)(1)\cos(1.57) + 50(1)(1.03)\cos(1.57) + 50(1.03)(1)\cos(1.57)$$

$$P_3^0 = 0.1206$$

$$Q_3^0 = -\Big[25\sin(1.57) + 50(1.03)\sin(1.57) + 75(1)^2\sin(-1.57)\Big]$$

$$Q_3^0 = -1.499$$

$$\Delta P_2^0 = P_{sch} - P_2^0 = 2.5 - 0.0904 = 2.4096$$

$$\Delta P_3^0 = -3.61 - 0.1206 = -3.7306$$

$$\Delta Q_3^0 = -1.805 + 1.499 = -0.306$$

$$\frac{\partial P_2}{\partial \delta_2} = (50)(1.03)\sin(1.57) + 50(1.03)\sin(1.57)$$

$$\frac{\partial P_2}{\partial \delta_2} = -102.99$$

$$\frac{\partial P_2}{\partial P_3} = -51.49$$

$$\frac{\partial P_3}{\partial P_2} = -50(1.03)\sin(1.57)$$

$$= 1-51.49$$

$$\frac{\partial P_3}{\partial \delta_3} = -25(\sin(1.57)) - 50(1.03)\sin(1.57)$$
$$= -76.49.$$

$$\frac{\partial Q_3}{\partial \delta_2} = -50(1.03)\cos(1.57) = -0.041$$

$$\frac{\partial Q_3}{\partial \delta_3} = -25\cos(1.57) - 50(1.03)\cos(1.57)$$
$$= -0.0609$$

$$\frac{\partial P_2}{\partial V_3} = 25(\cos(1.57)) + 50(1.03)\cos(1.57)$$
$$+ 150\cos(-1.57)$$
$$= 0.18$$

$$\frac{\partial Q_3}{\partial V_3} = -25\sin(1.57) - 50(1.03)\sin(1.87)$$
$$-150\sin(-1.57)$$
$$= -60.98$$

$$\begin{bmatrix} 2.406 \\ -3.7306 \\ -0.306 \end{bmatrix} = \begin{bmatrix} -102.99 & -51.49 & 0.041 \\ -51.49 & -7649 & 0.18 \\ -0.041 & -0.0607 & -608 \end{bmatrix} \begin{bmatrix} \Delta\delta_2 \\ \Delta\delta_3 \\ \Delta V_3 \end{bmatrix}$$

$$\begin{bmatrix} \Delta\delta_2 \\ \Delta\delta_3 \\ \Delta V_3 \end{bmatrix} = \begin{bmatrix} -0.072 \\ 0.0973 \\ 0.0050 \end{bmatrix}$$

$$\delta_2' = \delta_2^{\circ} - \Delta\delta_2^{\circ}$$

$$= 0.072 \text{ rad}$$

$$\delta_3' = -0.0973 \text{ rad}$$

$$V_3' = 1 - 0.005$$

$$V_3' = 0.995$$

## Conclusion:

In this lab, we have learnt about the Newton Raphson method. By using this method we can find the voltages for many iterations to get the more and more precise answer. So, basically it's an iterative method which helps us to find the bus voltages more accurate by taking some iteration. We also perform this lab on PWS software and observe the bus voltages for different number of iteration.

| | |
|---|---|
| **Name** | **Hamza Mobeen** |
| **Reg. #** | **EE-18-394** |
| **Marks** | |

# Power System Analysis (Open Ended Lab)

**Q:1**

**Apply newton Raphson method to solve the system and calculate ϕ2 and V2 after 1st iteration and match the value with simulation values? The value of V1 is 1∟0.**

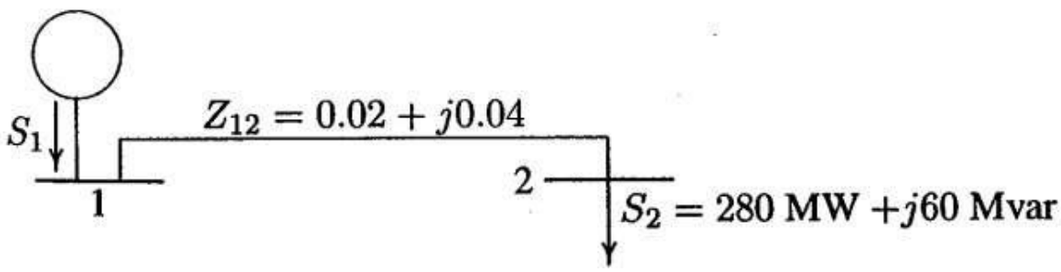


## SIMULATION:

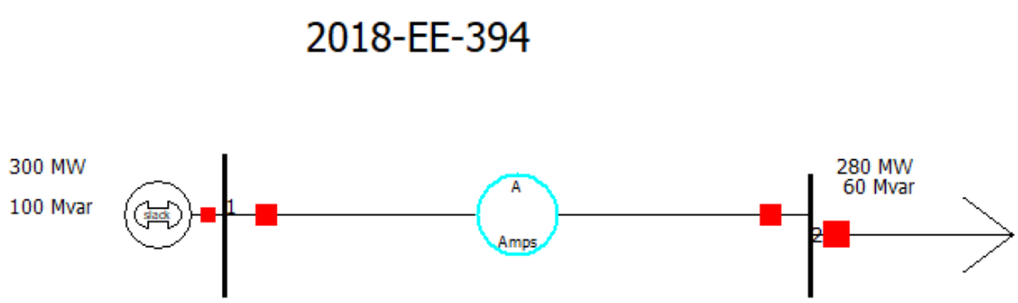


## YBUS:

| | Number | Name | Bus 1 | Bus 2 |
|---|---|---|---|---|
| 1 | 1 | 1 | 10.00 - j20.00 | -10.00 + j20.00 |
| 2 | 2 | 2 | -10.00 + j20.00 | 10.00 - j20.00 |

**Solution:**

2018-EE-394 Open Ended LAB

Q#

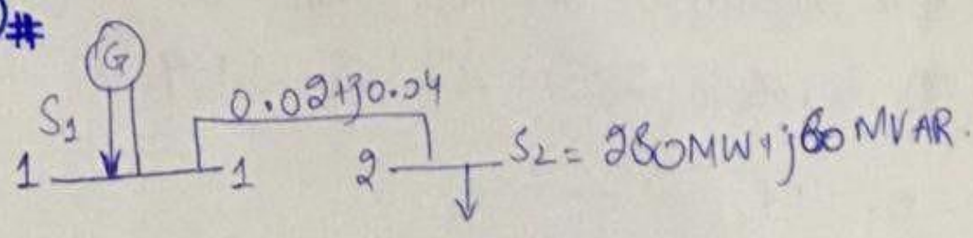


**Solution:-**

$$y_{12} = \frac{1}{Z_{12}} = \frac{1}{0.02+j0.04} = 10-20j$$

$$Y_{Bus} = \begin{bmatrix} 10-j20 & -10+j20 \\ -10+j20 & 10-j20 \end{bmatrix}$$

Polar form:-

$$Y_{Bus} = \begin{bmatrix} 22.3\angle -1.107 & 22.36\angle 2.03 \\ 22.36\angle 2.03 & 22.3\angle -1.107 \end{bmatrix}$$

$P_2 = 280MW$ , $Q_2 = 60$ MVAR.

$$P_{2,sch} = \frac{P_{2gi} - P_{2di}}{BaseMVA} = \frac{0-280}{100} = -2.8.$$

$$Q_{2,sch} = \frac{Q_{2gi} - Q_{2di}}{Base\ MVA} = \frac{0-60}{100} = j-0.6 = -j0.6$$

$$P_2^{(0)} = |V_1||V_2|\, Y_{21}\cos(\theta_{21} - \delta_2 + \delta_1) + |V_2|^2 Y_{22}\cos(\delta_{22})$$

$$P_2^{(0)} = (1)(1)\times 22.36\cos(2.03) + (1)^2\times(22.3)\cos(-1.107)$$

$P_2^{(0)} = 0.065.$

$Q_2 = [V_1 V_2 Y_{21} \sin(\delta_{21} - \delta_2 + \delta_1) + (V_2)^2 Y_{22} \sin(\theta_{22})$

$Q_2 = [(1) \times 22.36 \sin(2.03) + 22.3 \sin(-1.107)$

$Q_2 = -0.099.$

$\Delta P_2 = P_{2,sch} - P_2^{(0)}$

$= -2.8 - 0.065 = -2.865$

$\Delta Q_2 = Q_{2sch} - Q_2^{(0)} = -0.6 + 0.099 = -0.51$

$\Delta Q_2 = \cancel{-0.701}. = -0.51$

$$J = \begin{bmatrix} \frac{\partial P_2}{\partial \delta_2} & \frac{\partial P_2}{\partial V_2} \\ \frac{\partial Q_2}{\partial \delta_2} & \frac{\partial Q_2}{\partial V_2} \end{bmatrix}.$$

$\frac{\partial P_2}{\partial \delta_2} = V_2 V_1 Y_{21} \sin(\delta_{21} - \delta_2 + \delta_1)$

$= 22.36 \times \sin(2.03)$

$= 20.04.$

$\frac{\partial P_2}{\partial V_2} = V_1 Y_{21} \cos(\delta_{21} - \delta_2 + \delta_1) + 2V_2 Y_{22} \cos(\delta_{22})$

$\frac{\partial P_2}{\partial V_2} = 22.36 \cos(2.03) + 2 \times 22.3 \cos(-1.107)$

$= 10.04.$

$$\frac{\partial Q_2}{\partial \delta_2} = V_1 V_2 Y_{21} \cos(\delta_{21} - \delta_2 + \delta_1)$$

$$= 22.36 \times \cos(2.03) = -9.91072.$$

$$\frac{\partial Q_2}{\partial V_2} = -\left[V_1 Y_{21} \sin(\delta_{21} - \delta_2 + \delta_1) + 2V_2 Y_{22} \sin(\delta_{22})\right]$$

$$= -\left[22.36 \times \sin(2.03) + 2 \times 22.3 \sin(-1.107)\right]$$

$$\frac{\partial Q_2}{\partial V_2} = 19.84$$

Now:-

$$J = \begin{bmatrix} 20.04 & 10.04 \\ -9.91 & 19.84 \end{bmatrix}.$$

$$J^{-1} = \begin{bmatrix} 0.0399 & -0.0202 \\ 0.0199 & 0.0403 \end{bmatrix}$$

$$\begin{bmatrix} \partial \delta_2 \\ \partial V_2 \end{bmatrix} = \begin{bmatrix} 0.0399 & -0.0202 \\ 0.0199 & 0.0403 \end{bmatrix} \begin{bmatrix} -2.865 \\ -0.501 \end{bmatrix}$$

$$\begin{bmatrix} \partial \delta_2^{(0)} \\ \partial V_2^{(0)} \end{bmatrix} = \begin{bmatrix} -0.1042 \\ -0.0773 \end{bmatrix}.$$

$$\delta_2' = \delta_2^{(0)} + \partial \delta_2^{(0)} = 0 - 0.1042$$

$$\delta_2' = -0.1049$$

$$V_2^{(0)} = V_2^{(0)} + \partial V_2^{(0)}$$

$$= 0.9227$$

$$P_4 = V_4 \sum_{p=1}^{4} Y_{1p} V_p$$

$$P_4 = V_4$$

$$P_i = V_i \sum_{p=1}^{n} Y_{ip} V_p.$$

$$P_4 = V_4 \sum_{p=1}^{4} Y_{41} V_1 + Y_{42} V_2 + Y_{43} V_3 + Y_{44} V_4.$$