Network’s Lab.

Instructor: Masoud Asghari

Session: 3

Cisco Products List

- Router
- Switch
- Firewall
- Wireless
- IP Phone

Hardware Components of a Router

- RAM
  - Routing Table , ARP Cache, Packet Buffering
  - Running Config – Active Config File
- NVRAM (Nonvolatile, Changeable)
  - Startup – Config
- FLASH
  - **Router IOS**
- ROM (Not Changeable)
  - First Boot, Bootstrap
  - **Mini IOS**
- <u>Interface {Installed, Modules}</u>
- Console
- IOS
  - Internetworking Operating System

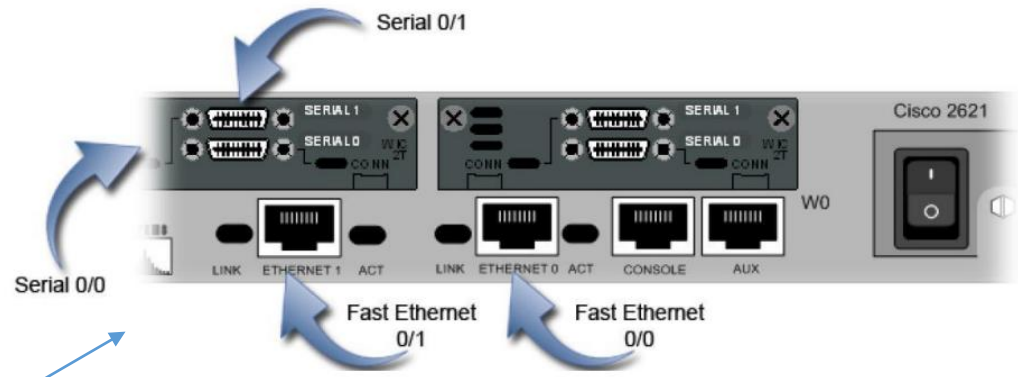

Modules

- NM : Network Module
- WIC : WAN Interface Card
- HWIC : High Speed WAN Interface Card
- PA : Port Adapter
- VIC : Voice Interface Card
- OSM : Optical Services Module

Configuration Tools

- We use **Console** interface at the switch/router
- Connect as serial cable
  - May use converter (Rj42 <-> RS232 to USB)

- Use ***PUTTY*** (software) to connect to the serial Port
  - This gives you the Command Prompt interface of the switch/router (**CLI**)

Access Modes of the CLI

- User Mode >
  - It is the default mode when you turn on the device
- Privilege Mode #
  - >Enable / En
  - #Disable
- Global Configuration Mode (Config)#
  - In privilege mode: #conf t / conf terminal
  - (Config)#Exit / Ctrl+Z

Showcase S3_1, *A simple switched LAN*

- Make the following Topology

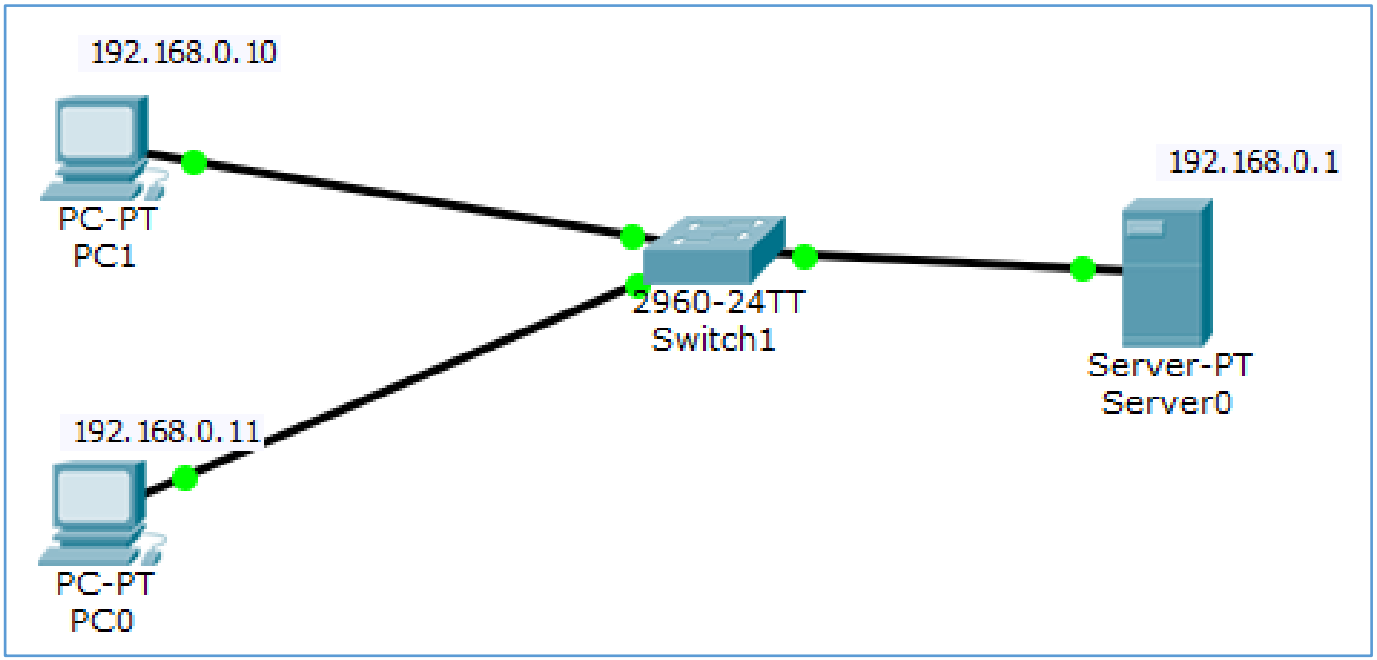

- Set Static IPs to the computers
- Using Command prompt, from PC1, Ping other computers' IPs
- Using Command prompt, from Server0, Ping other computers' IPs
- from PC1, Open Browser and Check Server's IP

Showcase S3_2. spanning tree

- Based on S3_1
- Make the following Topology

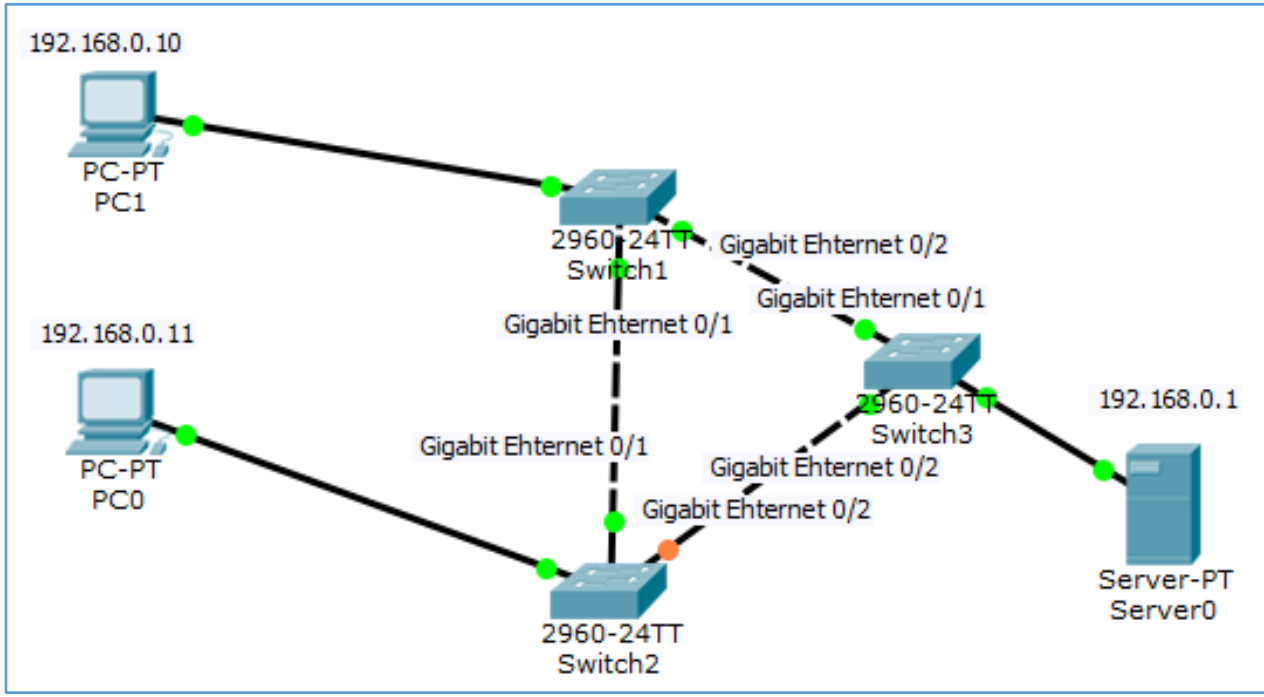

- Each pair of Two switches are connected with their <u>Gigabit Ethernet ports</u>
- When a **loop** is made in switches,
  - spanning tree protocol (**STP**), disables a port in the loop
- Check if computers can ping each other

STP

- Goal: Avoiding Layer 2 Loop

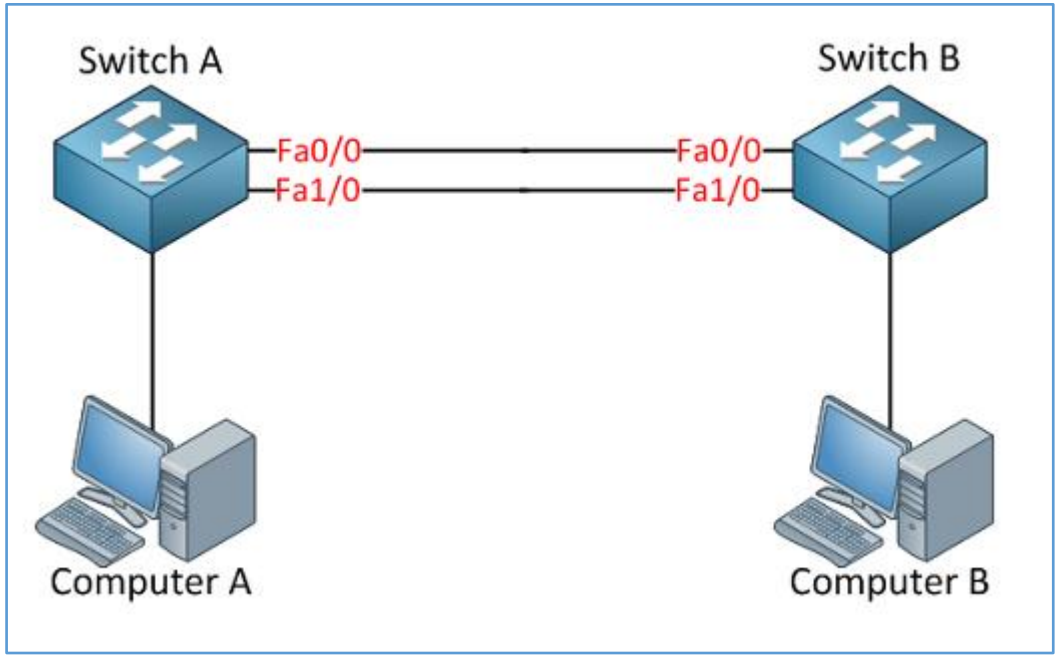

We have a loop! Both switches will keep forwarding over and over again

Ethernet frames don't have a TTL (Time to Live) value so they will loop around forever.

How Spanning Tree Solves Loops?

MAC Addresses:

Switch A: AAA
Switch B: BBB
Switch C: CCC

Switch# show spanning-tree detail
Switch# show spanning-tree

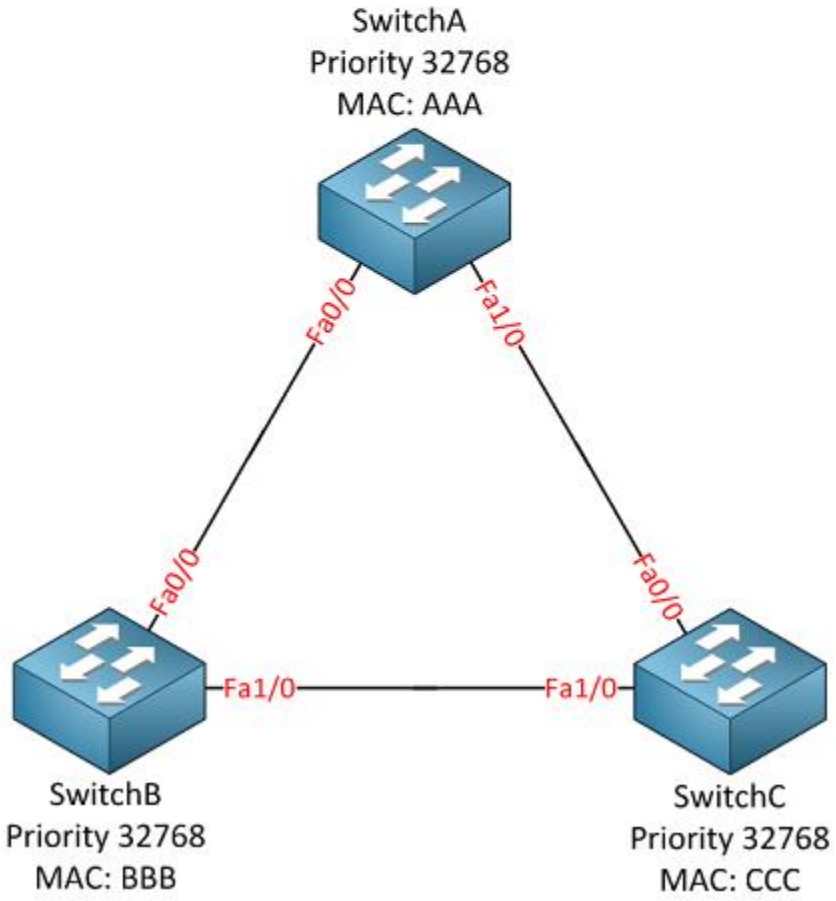

How Spanning Tree Solves Loops?

Spanning-tree requires the bridge ID for its calculation

Bridge ID = Mac Address + Priority

- First of all spanning tree will **elect a root bridge**; this root-bridge will be the one that has the best "bridge ID".
- The switch with the **lowest bridge ID** is the best one.
- By default the priority is **32768** but we can change this value if we want.

The ports on our root bridge are always designated which means they are in a forwarding state.

برگزیده

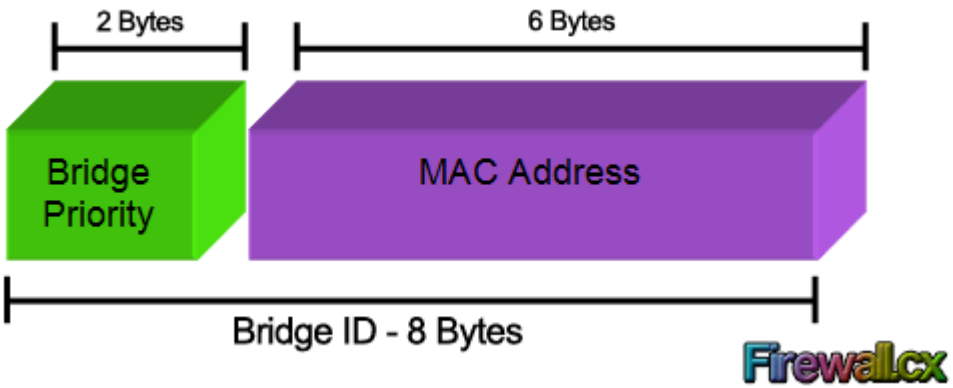

- Now we have agreed on the root bridge our next step for all our **"non-root" bridges** (so that's every switch that is not the root) will have to find the **shortest path to our root bridge**! The shortest path to the root bridge is called the **"root port"**.

- we have designated ports on our root bridge and root ports on our non-root bridges, we still have a loop however so we need to shut down a port between switch B and C to break that loop. So which port are we going to shut down? The one on switch B or the one on switch C? We'll look again at the best bridge ID:

Bridge ID = MAC address + Priority.

- Lower is better, both switches have the same priority but the MAC address of switch B is lower, this means that switch B will "win this battle". Switch C is our loser here which means it will have to block its port, effectively breaking our loop!

STP show Commands

- See the spanning tree status on switches
  - Open CLI of a switch (one with disabled, and one with normal port)
  - >en
  - # Show spanning-tree detail
  - Find Bridge Identifier there
  - #Show spanning-tree
    - See the root and interfaces status
  - #Show spanning-tree summary

STP conf. Commands

- (config)# spanning-tree VLAN 1
  - Enable STP on this VLAN on this switch
- (config)# no spanning-tree VLAN 1
  - Disable STP on this VLAN on this switch
- (config)# spanning-tree VLAN 1 root primary
- (config)# spanning-tree VLAN 1 root secondary
- (config)# spanning-tree VLAN 1 priority [#]

- See Very Useful article at:
  - http://www.firewall.cx/networking-topics/protocols/spanning-tree-protocol/1054-spanning-tree-protocol-root-bridge-election.html

STP change the root manually

- **One WAY**
- Set another switch as a root manually:
  - >en
  - #conf t
  - (config)#spanning-tree vlan 1 root primary
- Unset another switch as a root:
  - (config)#no spanning-tree vlan 1 root primary
- **The other WAY**
- Set another switch as a root manually:
  - (config)#spanning-tree vlan 1 priority 0
- Unset another switch as a root:
  - (config)#no spanning-tree vlan 1 priority

Do it Now!

1. Change **<u>S3_2</u>** as follows:

   - Use commands at page 14 “Disable STP on this VLAN on this switch”
     - Disable STP on all 3 switches
     - See what will happen? WHY? How to Fix it now?

For Home

- Find out about:
  - **Common Spanning-Tree**(**CST**)
  - Multiple Spanning Tree (MST), Per-VLAN Spanning Tree (PVST)
    - Use article link at page 14