Network’s Lab.

Instructor: Masoud Asghari

Session: 5

S5_1. VLan in a single switch

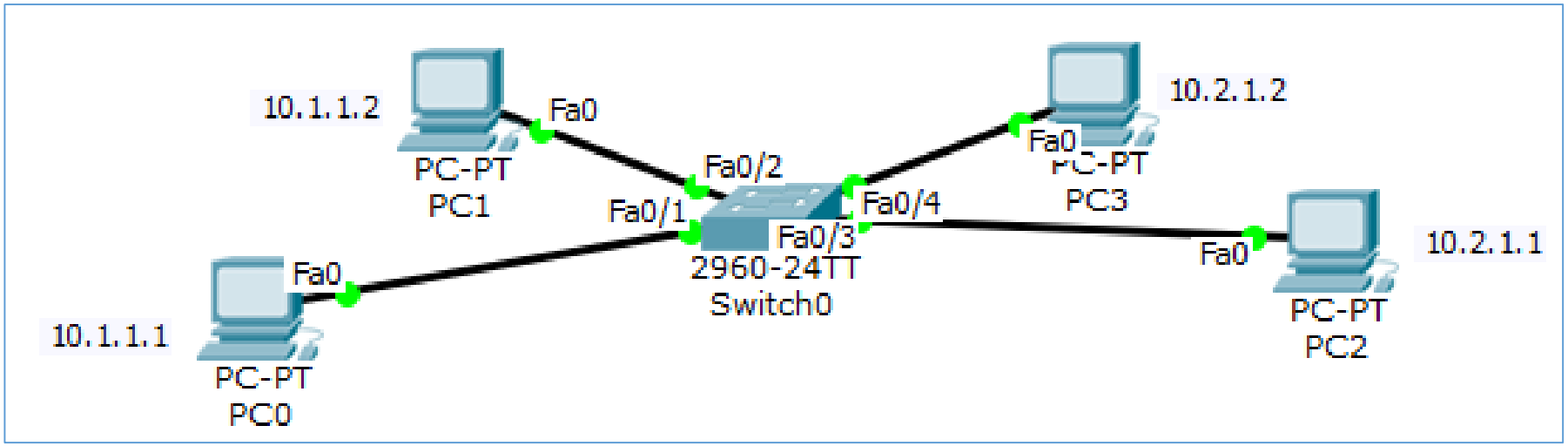

- Ping all computers to be sure they are all connected
- We now want to:

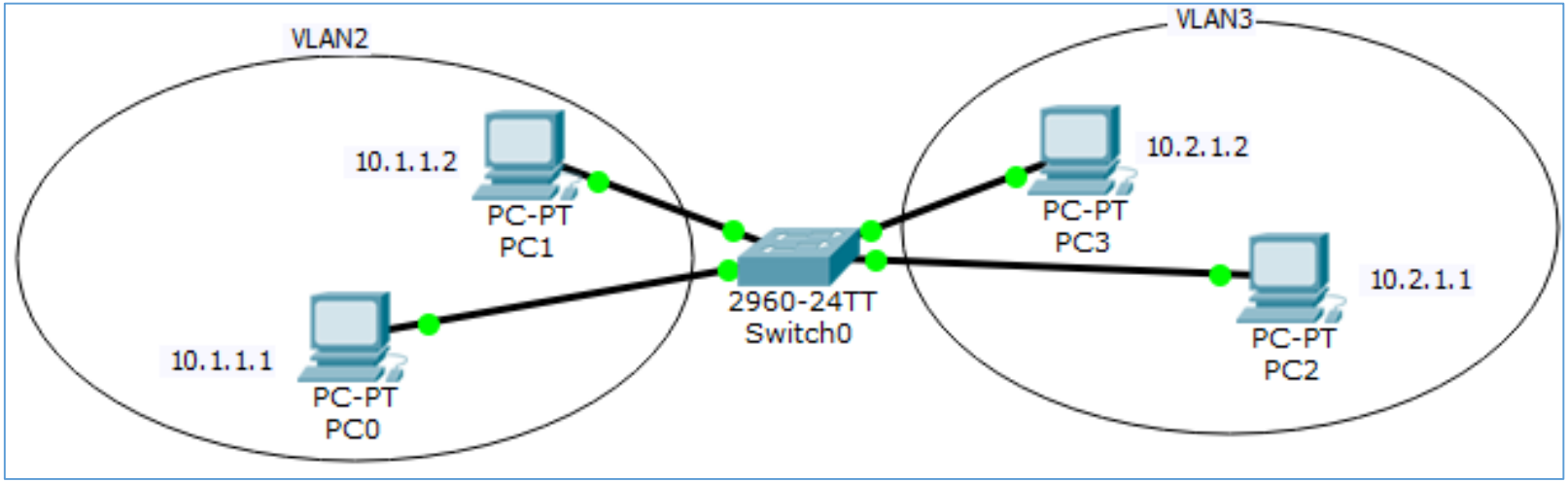

S5_1. VLan in a single switch

- # Show VLAN
- *To add more VLANS (2 and 3):*
  - (config)# vlan 2
  - (config-vlan)#exit
  - (config)# vlan 3
  - (config-vlan)#exit
  - (config)# exit
  - # Show VLAN
- *Assign Ports to VLANs*
  - (config)#interface fastEthernet 0/1
  - (config-if)#switchport access vlan 2

- Do the above for all:
  - fastEthernet 0/1, 0/2 ➔ vlan 2
  - fastEthernet 0/3, 0/4 ➔ vlan 3

S5_1. VLan in a single switch

- Now we have two partitions as VLANS

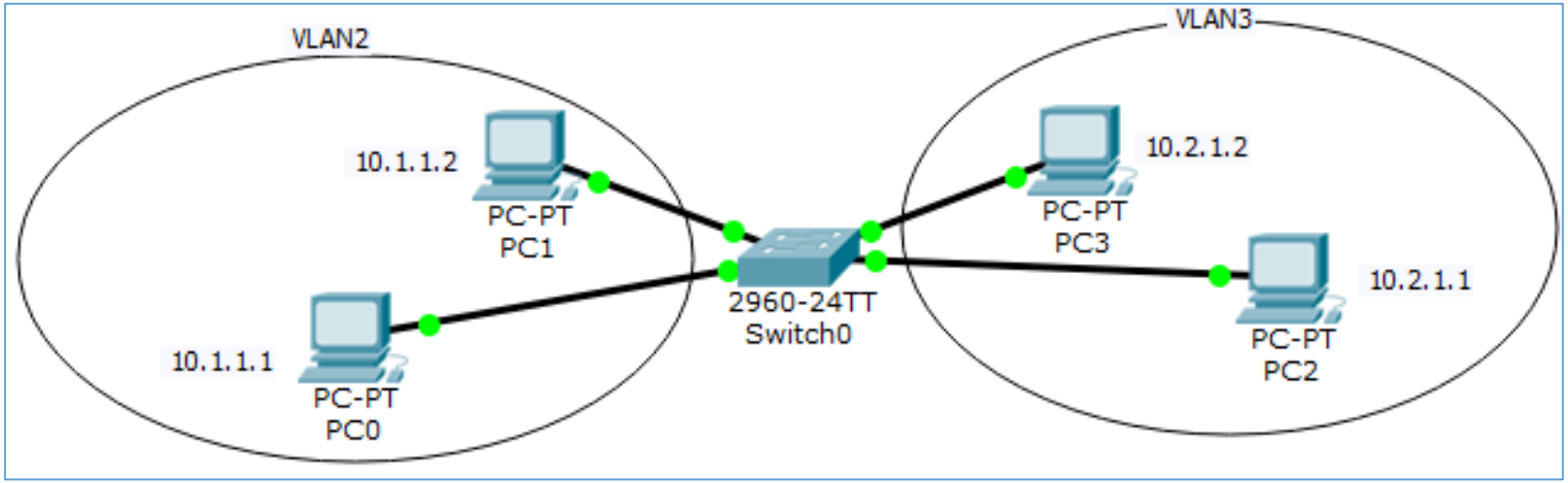

- Confirm it by:
  - # Show VLAN
- Ping computers inside a Vlan
- Ping computes among VLans

Understanding VLAN Ranges and switch modes

- **Switch Ports Modes**
  - Access Mode: Transmit only one VLANs data
  - Trunk Mode: Transmit more than one VLANs data.
- Vlan IDs:

VLAN ID	FUNCTION
VLAN 1002	Default FDDI VLAN
VLAN 1004	Default FDDI NET VLAN
VLAN 1005 (trbrf-default) with bridge number 0F	Default Token Ring TrBRF VLAN
VLAN 1003 (trcrf-default)	Default Token Ring TrCRF VLAN

VLANs Numbers	Range	Usage
1	Normal	Cisco default. You can use this VLAN, but you cannot modify or delete it.
2—1005	Normal	You can create, use, modify, and delete these VLANs.
1006—4094	Extended	You can create, name, and use these VLANs. You cannot change the following parameters: • State is always active. • VLAN is always enabled. You cannot shut down these VLANs.
3968—4047 and 4094	Internally allocated	These 80 VLANs, plus VLAN 4094, are allocated for internal use. You cannot create, delete, or modify any VLANs within the block reserved for internal use.

S5_2.Configuring VLAN on Multiple Switches

- Modify S5_1 by copying all above and connecting two switches with Gig 0/1 and setting below computers' IP as below

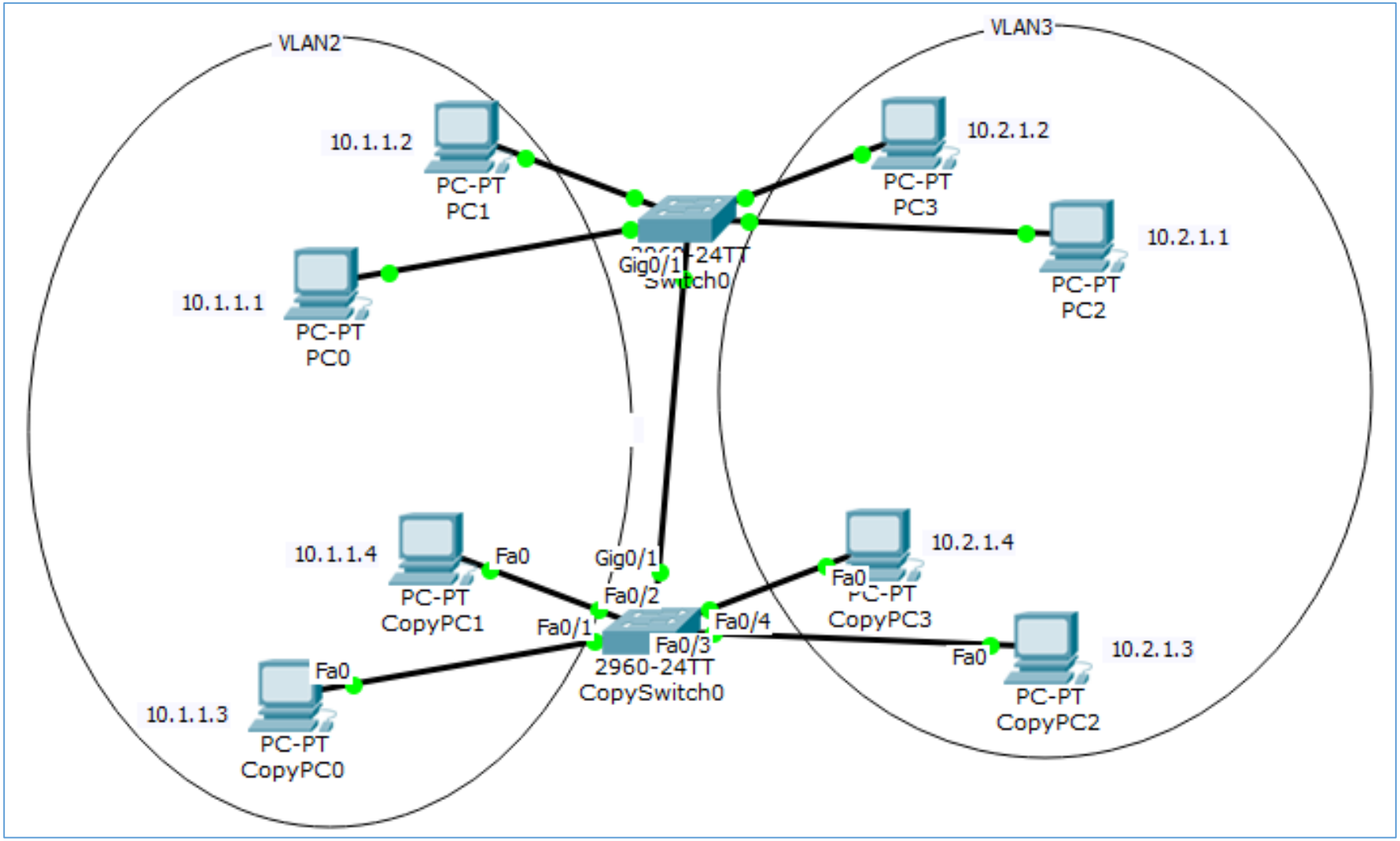

S5_2.Configuring VLAN on Multiple Switches

- Check vlan status on both switches with
  - # Show VLAN
- Ping computers inside a Vlan both at above or below switches
- Ping computers inside a Vlan one at above and one at below switches
- **Trunk Port Configuration**
  - Switch1(config)# Interface GigabitEthernet 0/1
  - Switch1(config-if)# Switchport Mode Trunk
  - Switch2(config)# Interface GigabitEthernet 0/1
  - Switch2(config-if)# Switchport Mode Trunk
- Now do the following test again:
  - Ping computers inside a Vlan one at above and one at below switches
- Also check:
  - # Show VLAN
  - #show interfaces trunk
  - #show interfaces switchport

Trunk Mode Encapsulation Methods

- Protocols to tag Ethernet frames in a **shared link (trunk)**
- **ISL**
  - is an Cisco proprietary protocol.
  - Supports up to 1000 VLANs
  - is less preferred in networks because of its high overhead added to Ethernet frames.
- IEEE 802.1Q
  - It is an IEEE Standard.
  - supports 4096 VLAN
  - Low overhead , a 4 byte tag is inserted into original frame
- Config (not supported in new switches, always 802.1q):
  - (config-if)# Switchport trunk encapsulation isl
  - (config-if)# Switchport trunk encapsulation dot1q
  - (config-if)# Switchport trunk encapsulation negotiate

Do it now

1. Change **S5_2** as follows:
   - Change trunk mode of GE 0/1 to **access mode** at both switches.
   - We have GE 0/1 of both switches connected. In addition to this, Connect GE 0/2 of both switches too.
   - Now change vlan of GE 0/1 to **vlan2** and vlan of GE 0/2 to **vlan3** at both switches
   - **You should now** be able to ping above and below PCs at the same vlan without using trunk mode!
   - Note that we cannot always do this (because there might be lots of vlans)