Network’s Lab.

Instructor: Masoud Asghari

Session: 9

VTP – VLAN Trunking Protocol

- VTP is a Cisco proprietary protocol that propagates the definition of VLAN on the whole LAN. To do this, VTP carries VLAN information to all the switches in a VTP domain. VTP advertisements can be sent over ISL, 802.1Q, IEEE 802.10 and LANE trunks. VTP is available on most of the Cisco Catalyst Family products. Using VTP, each Catalyst Family Switch advertises the following on its trunk ports:
  - Management domain
  - Configuration revision number
  - Known VLANs and their specific parameters
- There are three versions of VTP, namely version 1, version 2, version 3.

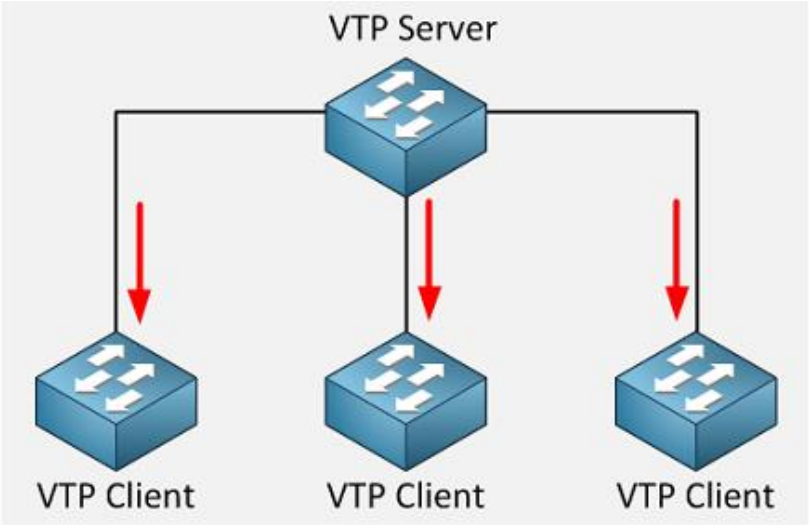

VTP Switch Modes

- VTP Server: Default Mode
- VTP Client
- VTP Transparent

S9_1. VTP

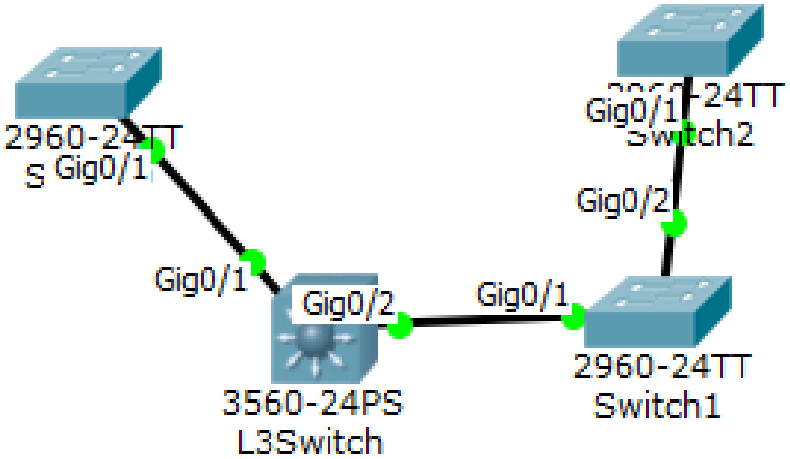

- L3Switch(config)#vlan 2
- L3Switch(config-vlan)#name "Dep. of Comp.”
- L3Switch(config)#vlan 3
- L3Switch(config-vlan)#name "Dep. of Economic.”
- L3Switch(config)#vlan 4
- L3Switch(config-vlan)#name "Dep. of Elect.“
- L3Switch#show vlan
- L3Switch(config)#vtp mode server
- L3Switch(config)#vtp domain university
- L3Switch#show vtp status
- L3Switch(config)#interface range gigabitEthernet 0/1-2
- L3Switch(config-if-range)#switchport trunk encapsulation dot1q
- L3Switch(config-if-range)#switchport mode trunk

S9_1. VTP

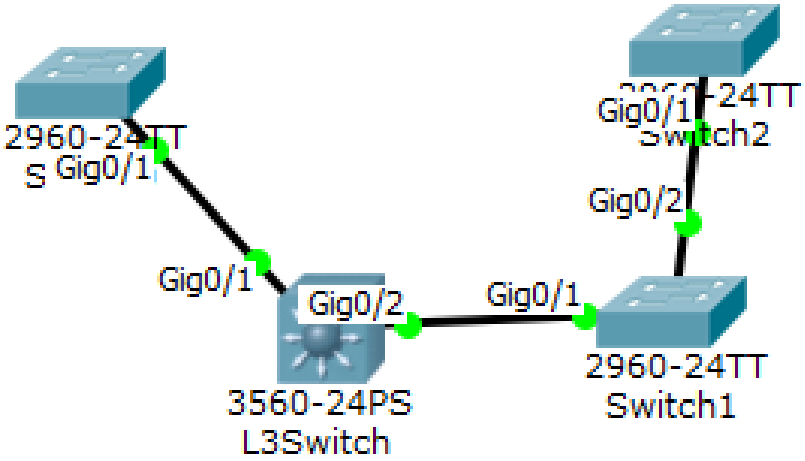

- Inter VLan with L3switch
  - L3Switch(config)#interface vlan 2
  - L3Switch(config-if)#ip address 192.168.2.1 255.255.255.0
  - L3Switch(config)#interface vlan 3
  - L3Switch(config-if)#ip address 192.168.3.1 255.255.255.0
  - L3Switch(config)#interface vlan 4
  - L3Switch(config-if)#ip address 192.168.4.1 255.255.255.0
  - L3Switch(config)#ip routing
  - L3Switch#show ip route

S9_1. VTP

- **For switches 0,1,2**
  - Switch(config)#interface range gigabitEthernet 0/1-2
  - Switch(config-if-range)#switchport mode trunk
  - Switch#**show vlan**
  - Switch(config)#vtp mode client
  - Switch(config)#vtp domain university
  - Switch#show vlan
  - Switch#show vtp status
- **In Switch2**
  - Switch2(config)#interface range fastEthernet 0/1-10
  - Switch2(config-if-range)#switchport mode access
  - Switch2(config-if-range)#switchport access vlan 2
- **In Switch0**
  - Switch0(config)#interface range fastEthernet 0/1-10
  - Switch0(config-if-range)#switchport mode access
  - Switch0(config-if-range)#switchport access vlan 3
  - Switch0(config)#interface range fastEthernet 0/11-15
  - Switch0(config-if-range)#switchport mode access
  - Switch0(config-if-range)#switchport access vlan 2

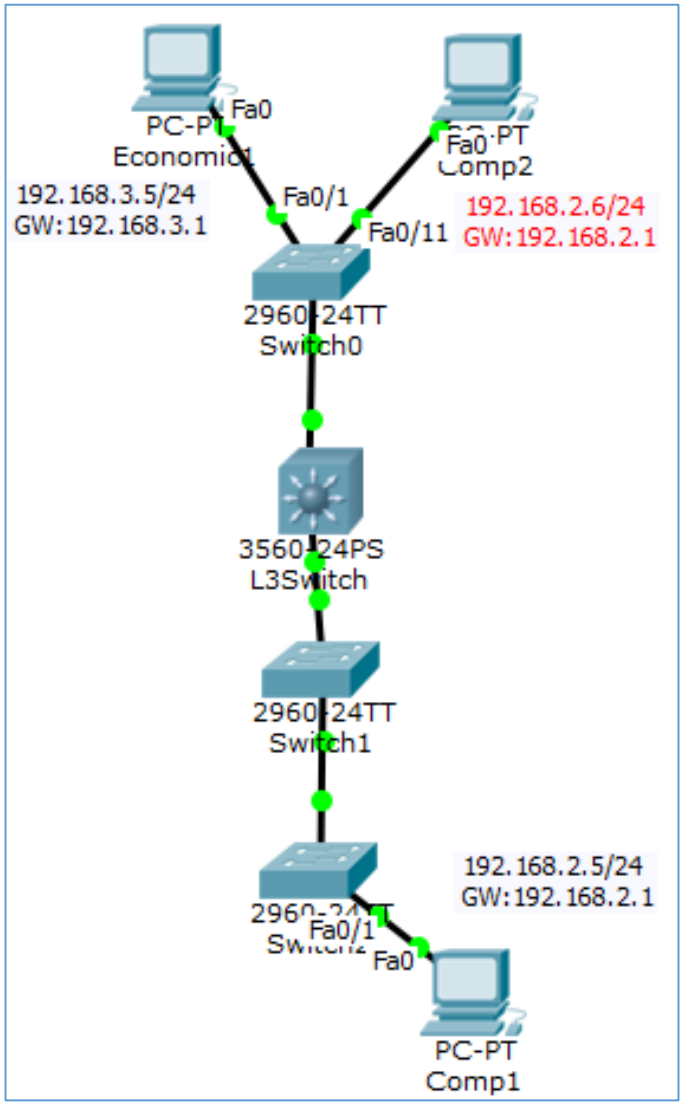

NAT – Network Address Translation

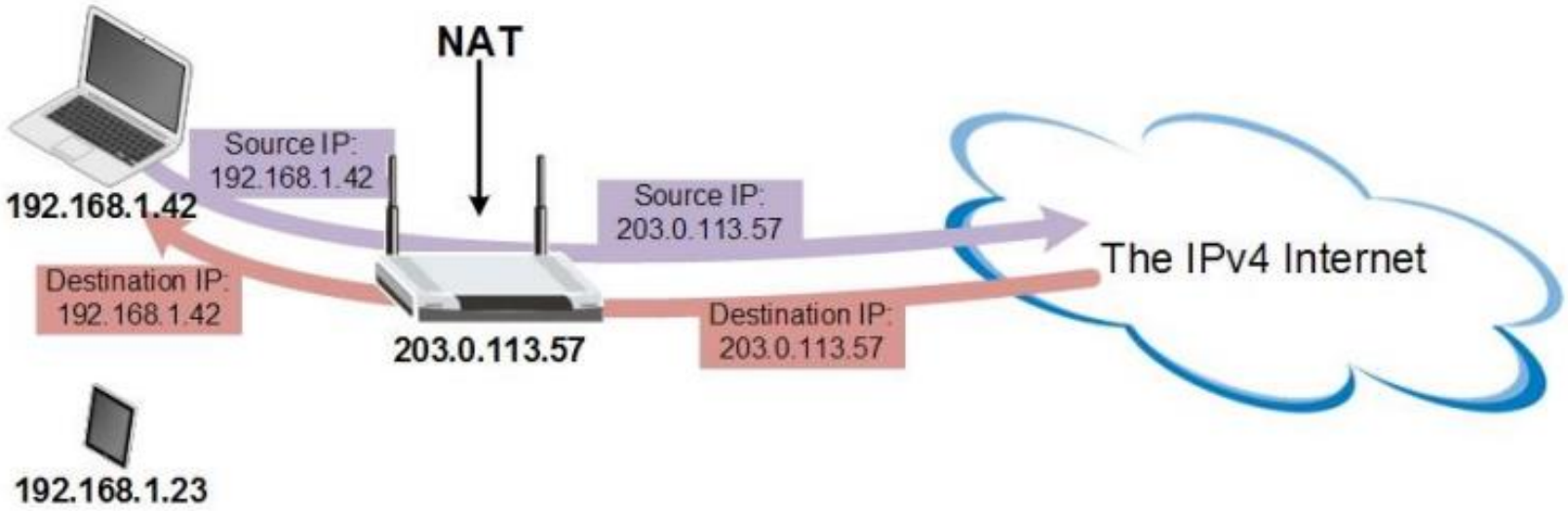

NAT Supported Devices

- Server
- Router
- L3 Switch
- Firewall

NAT – Advantages

- Public IP Address Sharing
- Easier Expansion
- Greater Local Control
- Greater Flexibility in ISP Service
- Transparency

NAT - Disadvantages

- Complexity
- Delay
- Poor Support for Client Access
- Performance Reduction

Private IP Addresses

Class	Range
A	10.0.0.0 -> 10.255.255.255
B	172.16.0.0 -> 172.31.255.255
C	192.168.0.0 -> 192.168.255.255

NAT Devices Interfaces

- Inside Interface
- Outside Interface

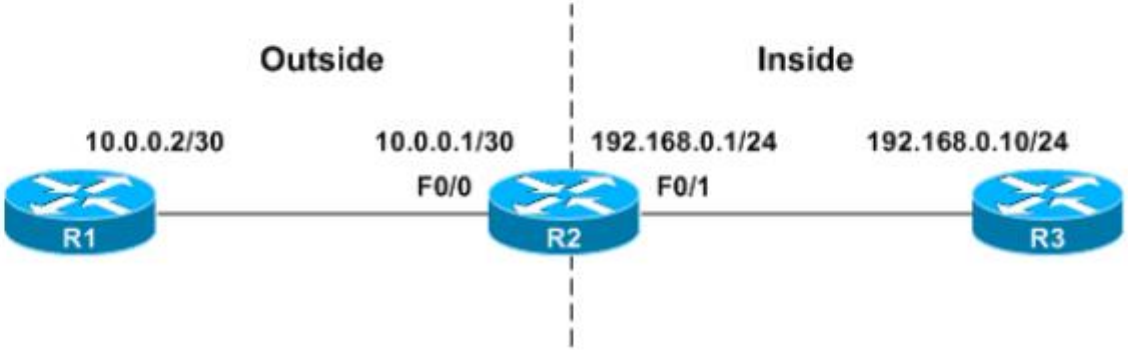

NAT Types

- **Static NAT**
  - a private IP address is mapped to a public IP address
  - the public address is always the same IP address (**static** address).
  - an internal host, (as a Web server), to have a private IP address and still be reachable over the Internet.
  - Number of Private IP Addresses and Public IP Addresses should be same in this type
- **Dynamic NAT**
  - translates a group of real addresses to a **pool of mapped addresses** that are routable on the destination network.
  - The mapped pool may include fewer addresses than the real group.
- **Port Address Translation** (**PAT**)
  - is an extension to **NAT** that permits multiple devices on a LAN to be mapped to a single public IP address.
  - The goal of **PAT** is to conserve IP addresses.

S9_2.PAT(NAT Overload)

- Create the following scenario

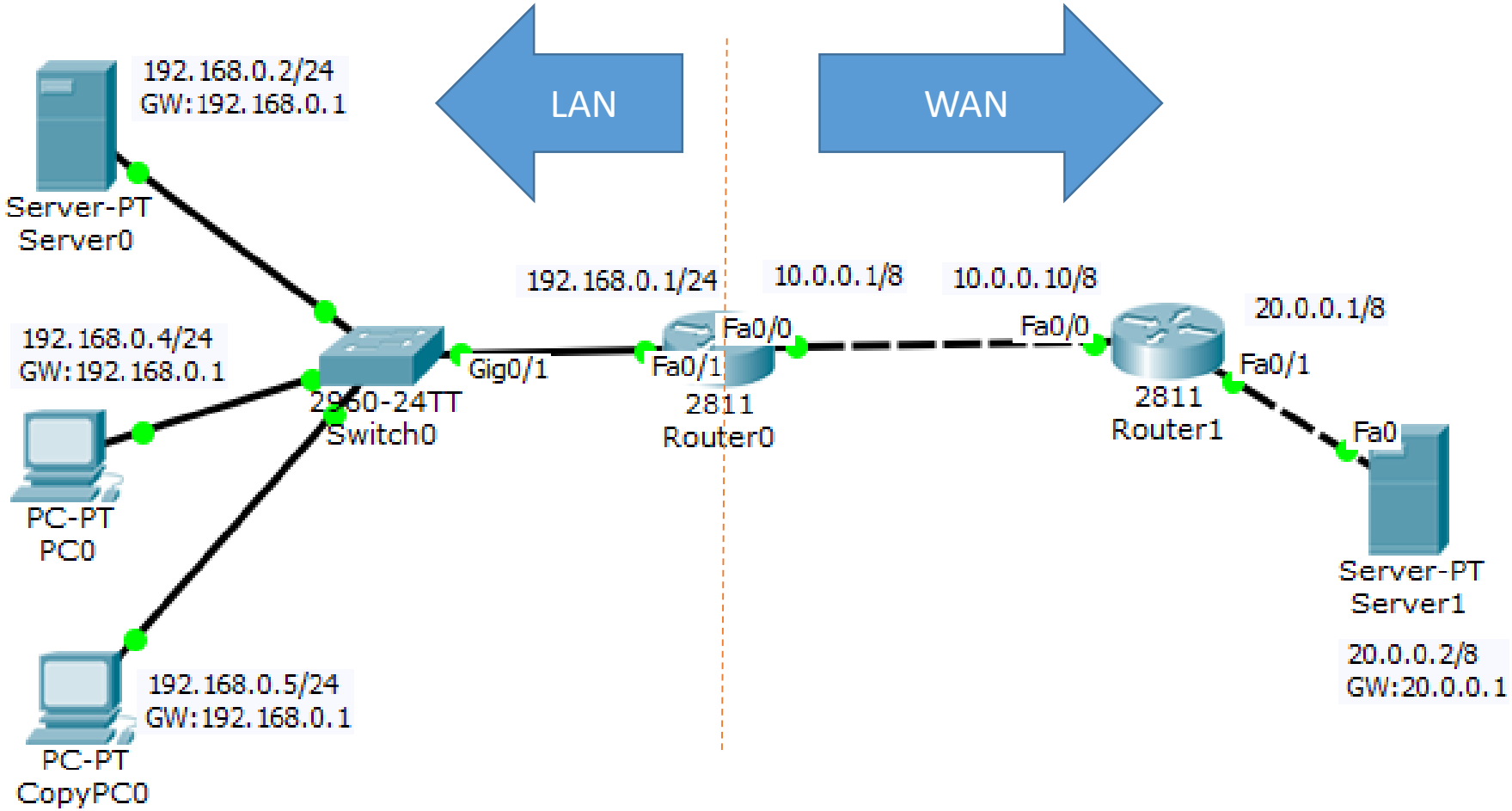

S9_2.PAT(NAT Overload)

- Router0(config)#interface fastEthernet 0/0
- Router0(config-if)#ip address 10.0.0.1 255.0.0.0
- Router0(config-if)#no shutdown
- Router0(config)#interface fastEthernet 0/1
- Router0(config-if)#ip address 192.168.0.1 255.255.255.0
- Router0(config-if)#no shutdown
- Router0(config)#ip route 0.0.0.0 0.0.0.0 fastEthernet 0/0

- Router1(config)#interface fastEthernet 0/0
- Router1(config-if)#ip address 10.0.0.10 255.0.0.0
- Router1(config-if)#no shutdown
- Router1(config)#interface fastEthernet 0/1
- Router1(config-if)#ip address 20.0.0.1 255.0.0.0
- Router1(config-if)#no shutdown

S9_2.PAT(NAT Overload)

- Router0(config)#interface fastEthernet 0/0
- Router0(config-if)#ip nat outside
- Router0(config-if)#exit
- Router0(config)#interface fastEthernet 0/1
- Router0(config-if)#ip nat inside
- Router0(config-if)#exit
- Router0(config)#access-list 1 permit 192.168.0.0 0.0.0.255
- Router0(config)#ip nat inside source list 1 interface fastEthernet 0/0 overload
- Router0#show ip nat translations

- Open Browser at PCs and check http://20.0.0.2
- LAN users can access WAN, All with a single IP

S9_3.Configuring Static NAT on Cisco Routers

- Following S8_2:
  - We want to access LAN webserver from WAN
  - WAN IP 10.0.0.2 is also assigned to us

- Router0(config)#ip nat inside source static 192.168.0.2 10.0.0.2
- Router0#show ip nat translations

- Open Server1's browser
  - Check http://10.0.0.2

S9_4.DHCP server

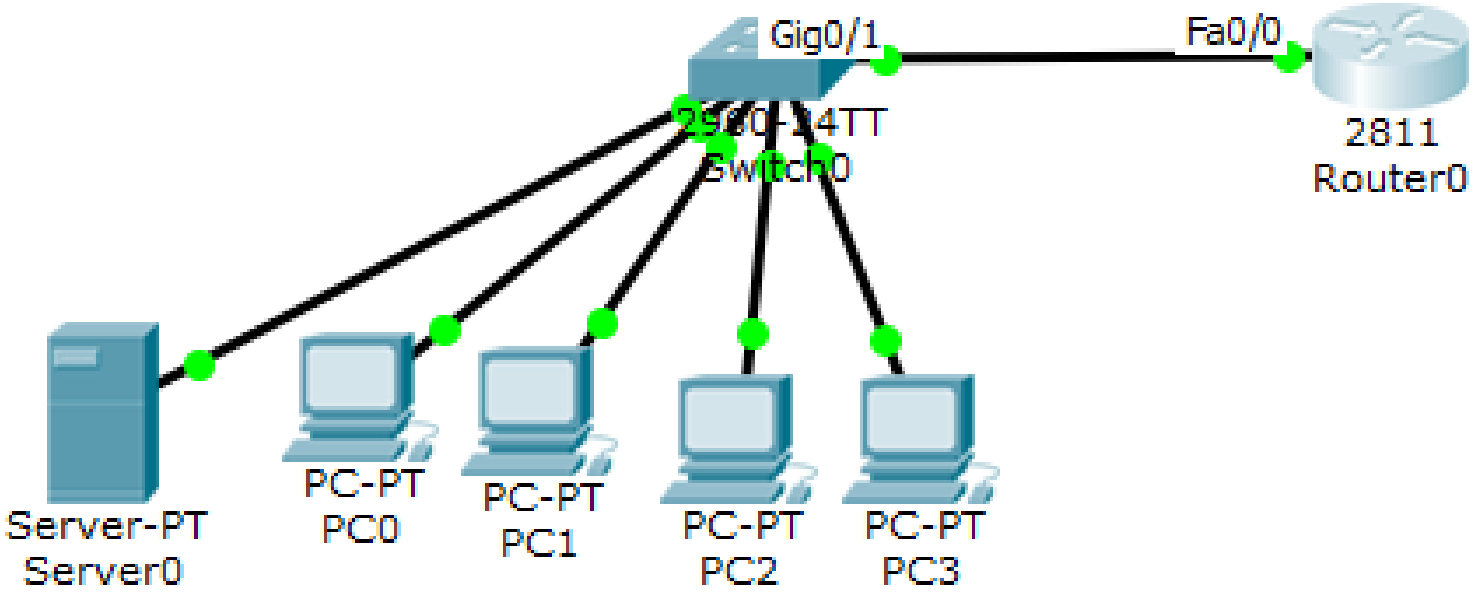

- Router(config)#interface fastEthernet 0/0
- Router(config-if)#ip address 192.168.0.1 255.255.255.0
- Router(config-if)#no shutdown
- Router(config-if)#exit

S9_4.DHCP server

- Router(config)#ip dhcp pool TEST
- Router(dhcp-config)#network 192.168.0.0 255.255.255.0
- Router(dhcp-config)#default-router 192.168.0.1
- Router(dhcp-config)#dns-server 8.8.8.8
- Router(dhcp-config)#exit
- Router#show ip dhcp binding

- **Change IP configuration of all PCs and server to DHCP**

Assignments

1. Change **<u>S9_3</u>** as follows:
   - Add another Webserver with IP: 192.168.0.10/24
   - WAN IP **10.0.0.3** is also assigned to us
   - Add static NAT to allow WAN users see this webserver with **10.0.0.3** address

- <u>Bonus:</u>
  - We used Access list at page 12
  - Find out more about access lists (ACL), its types and configuration