T1: Throughput of the IEEE 802.11 Protocol (Wi-Fi)

Mobile Networks - DEEC / FCT / NOVA University of Lisbon

March 12, 2026 - Rodolfo Oliveira - rev. 0.000

1 Protocol Operation – Medium Access

In the IEEE 802.11 protocol (commonly referred to as Wi-Fi), when a node has a data frame to transmit it accesses the wireless medium (called the channel). During medium access, nodes apply a waiting method (contention), meaning that they do not access the channel instantaneously and instead perform a random waiting interval whose duration depends on the channel occupancy by the nodes with which they compete.

Consider the example scenario illustrated in Figure 1, where 2 nodes (Station 1 and Station 2) compete for medium access. Each node has a contention window represented by W_i, where $i = 0, ..., m$ represents the retransmission attempt of the frame. Initially a node attempts the first transmission with window W_0, generating a random number between 0 and $W_0 - 1$. This random number represents the number of time slots during which a node must observe the channel without activity (idle) before accessing the medium; this interval is called the random contention period. As illustrated in the figure, node 1 obtains $bc = rand(W_0) = rand(0, ..., W_0 - 1) = 4$ and node 2 obtains $bc = rand(W_0) = 8$, where bc represents the *backoff counter* that will be decremented each time the channel is observed idle. When this counter reaches zero the node accesses the channel. In the figure node 1 accesses first because its *backoff counter* ($bc = 4$) is smaller than that of the second node (bc=8). During the period in which node 1 accesses the channel, the counter of node 2 is frozen at value 4. Node 2 only resumes decrementing the counter after observing the channel idle during a DIFS interval.

In the protocol, nodes adapt the contention window according to the number of collisions. Thus, if node 1 does not receive the ACK message indicating that the transmitted message was successfully received, it will retransmit the data frame. However, in the first retransmission it will use a larger window given by $W_1 = 2W_0$ (twice the window used in the first attempt). In Figure 2, the case where the initial window is $W_0 = 32$ is illustrated. In the first retransmission the node will use the window $W_1 = 2W_0 = 64$ and so on, up to a maximum of $m = 5$ retransmissions of the same data frame, corresponding to

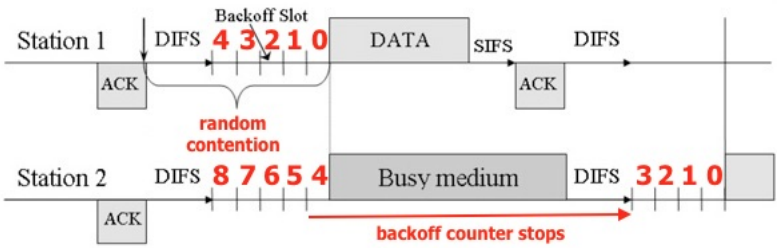

Figure 1: Backoff counter mechanism until medium access.

6 transmission attempts of the same frame. Doubling the window value at each new transmission attempt is called *Exponential Backoff*, which aims to increase the average contention of each node as collisions occur. In this case, we can say that the contention window used in retransmission i is given by $W_i = 2^i W_0$, $0 \leq i \leq m$ (in the example of Figure 2, $W_0 = 32$, $W_1 = 2^1 W_0 = 2 \times 32 = 64$, and so on).

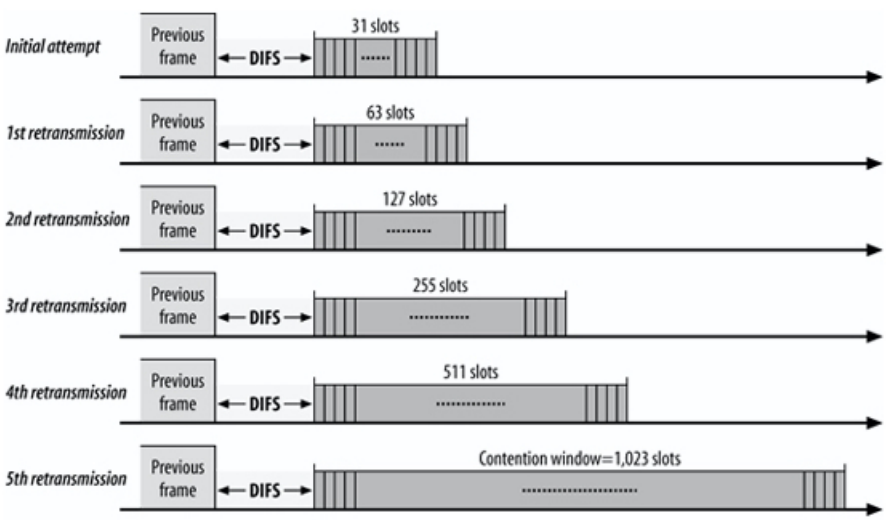

Figure 2: Increase of the contention window according to the number of transmissions.

2 Model

To calculate the protocol throughput we will follow the model presented in [1]. The main idea is to determine the transmission probability of a node. For that purpose we need to represent all possible states of the *backoff counter* across the

multiple transmission attempts. Figure 3 represents the Markov chain, where all possible cases of the *backoff counter* are shown in circular regions using the notation x, y, where x represents the transmission attempt number and y represents the value of bc. The circular regions represented in red correspond to the slots in which the node accesses the channel (in attempts 0, $i-1$, ..., i, ..., m).

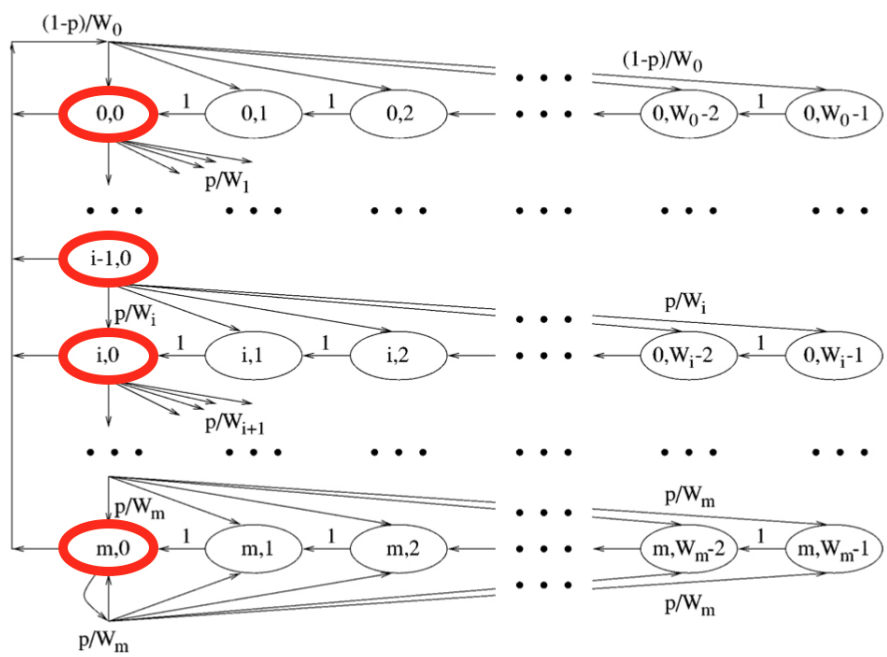

Figure 3: Probability model: Markov chain.

In the figure, p represents the probability that the channel is busy. Representing the probability that a node accesses the channel by τ, and considering that there are n nodes competing for the channel, the probability that the channel is idle is given by

$$p_{idle} = (1-\tau)^n, \tag{1}$$

which indicates that none of the n nodes transmits (the probability that a node does not transmit is $(1-\tau)$). Therefore, the probability that the channel is busy is the complement of the probability of being idle, that is,

$$1 - p_{idle} = p = 1 - (1-\tau)^n. \tag{2}$$

At this point we still cannot determine the probability that a node accesses the channel, τ. This probability is given by the sum of the probabilities of the red states (in Figure 3), that is [1]

$$\tau = \sum_{x=0}^{m} Prob(x,0) = \frac{2(1-2p)}{(1-2p)(W_0+1)+pW_0(1-(2p)^m)}. \tag{3}$$

The calculation of the node access probability is determined through equations (2) and (3), obtaining the system of equations

$$\begin{cases} p = 1-(1-\tau)^n \\ \tau = \dfrac{2(1-2p)}{(1-2p)(W_0+1)+pW_0(1-(2p)^m)} \end{cases}, \tag{4}$$

from which we can determine τ numerically. In this assignment this model is implemented in the file *model.m*.

Having the probability that each node accesses the channel, τ, it is possible to determine the probability that the channel is idle,

$$P_{idle} = (1-\tau)^n, \tag{5}$$

busy due to a successful transmission

$$P_{succ} = n\tau(1-\tau)^{(n-1)}, \tag{6}$$

or busy due to a collision,

$$P_{coll} = 1 - P_{succ} - P_{idle}. \tag{7}$$

3 Assignment

3.1 First objective – probabilities

In the first objective, the goal is to compare the results of the four probabilities τ, P_{idle}, P_{succ}, and P_{coll} obtained through the **model** and through **simulation**.

To do so, study the provided code following this sequence:

1. Understand the implementation of the model in file *model.m*;
2. Understand the implementation of the simulation in file *simulation.m*;
3. Understand the comparison of results performed in file *main.m*.

After understanding the code, obtain and compare the probability figures considering $n = \{5, 10, 20, 40, 80, 120\}$, $W_0 = \{4, 8, 16\}$ and 5 different values of m:

- Scenario 1 - m=0;
- Scenario 2 - m=1;
- Scenario 3 - m=4;

- Scenario 4 - m=8;
- Scenario 5 - m=12.

Evaluation:
Report the obtained results (the 5 figures, one for each value of m) adding a justification for the obtained probability values (limited to 3 paragraphs with 10 lines each).

3.2 Second objective – throughput

We now aim to determine the network throughput. Throughput is represented as the percentage of the maximum rate (bps) at which a node can communicate. In this case, the channel is not always carrying successful transmissions. There are time intervals in which the channel is idle, others where successful transmissions occur (only one node accesses), and others where the channel is busy due to collisions. As illustrated in Figure 1, the intervals in which the channel is declared idle and the *bc* is decremented are shorter than the intervals in which the channel is busy. Moreover, the duration of the channel busy due to a successful transmission is different from the duration of the channel busy due to a collision, as illustrated in Figure 4.

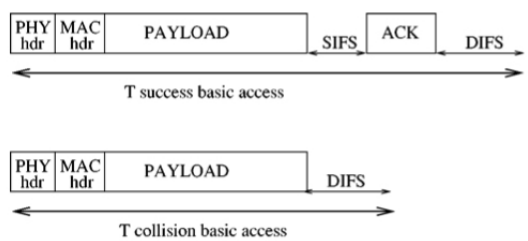

Figure 4: Duration of channel occupation times: successful transmission and collision.

In this assignment we will consider relative times. Thus, we assume that the duration of the time interval in which the channel is observed idle is one unit, T_{idle}=1. However, when the channel is busy due to a successful transmission, that interval lasts 150 times longer, i.e., T_{succ}=150. If the occupation is due to a collision, the interval lasts slightly longer, T_{coll}=160.

From the model perspective, throughput (*throughput*, represented by S) is determined as the ratio between the time in which the channel is occupied by successful transmissions and all other average times (channel idle, busy due to successful transmission, and busy due to collisions), that is,

$$S = \frac{P_{succ}T_{succ}}{P_{idle}T_{idle} + P_{succ}T_{succ} + P_{coll}T_{coll}}. \tag{8}$$

In this objective, modify the model and the simulations in order to obtain throughput values for the same values of m used in the first objective (also considering parameters n and W_0).

Evaluation:

Report the obtained results as a graph as illustrated in Figure 5. The five different throughput curves (one for each value of m) should be shown in a single figure so that they can be compared (considering $T_{idle} = 1$, $T_{succ} = 150$, $T_{coll} = 160$).

Also include a similar figure considering $T_{idle} = T_{succ} = T_{coll}$=1. Comment only on the causes of the differences between the two figures (limited to 3 paragraphs with 10 lines each).

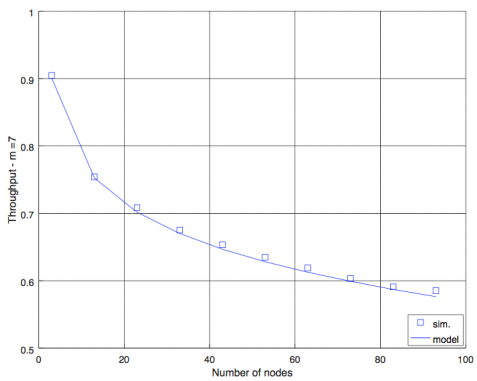

Figure 5: Throughput results.

3.3 Third objective – quality of service

To consider a service differentiation scenario per node, modify the simulator code in order to implement the access scheme of the IEEE 802.11e protocol, as illustrated in Figure 6.

In this scenario, each node should simultaneously have packets belonging to the four access categories (AC) for transmission. Assume that the maximum number of retransmissions is $m = 8$ and that there are $n = 10$ nodes in the network. Also consider the following minimum contention windows for each access category: $CW_{\min 0} = 20$, $CW_{\min 1} = 16$, $CW_{\min 2} = 10$ and $CW_{\min 3} = 8$.

After implementing these changes, run the simulator and present a table with the average throughput values obtained for each of the four access categories (ignore in the simulator the differentiation implemented through different AIFSN intervals).

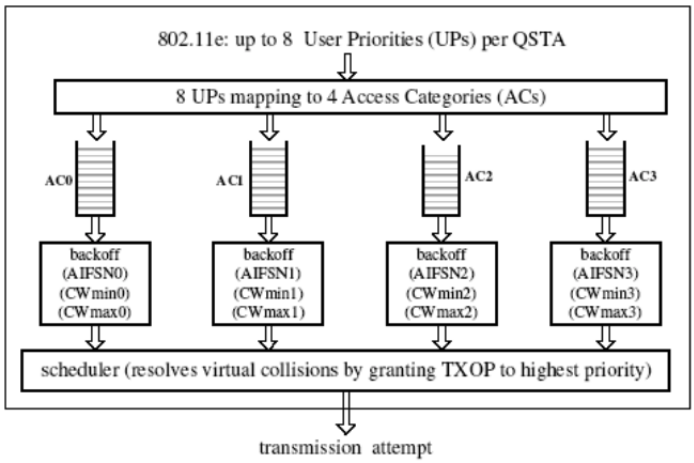

Figure 6: IEEE 802.11e service diferentiation.

4 Submission

The assignment must be sent to the email rado@fct.unl.pt by **23:59** on **March 31**.

The submission must include:

- the three files (main.m, simulations.m and model.m) required to obtain the final figure of the second objective;
- a PDF file with the figures and the requested justifications, as well as the table of average throughputs from the third objective;
- the files developed for the third objective.

References

[1] G. Bianchi. Performance analysis of the ieee 802.11 distributed coordination function. *IEEE Journal on Selected Areas in Communications*, 18(3):535–547, 2000.