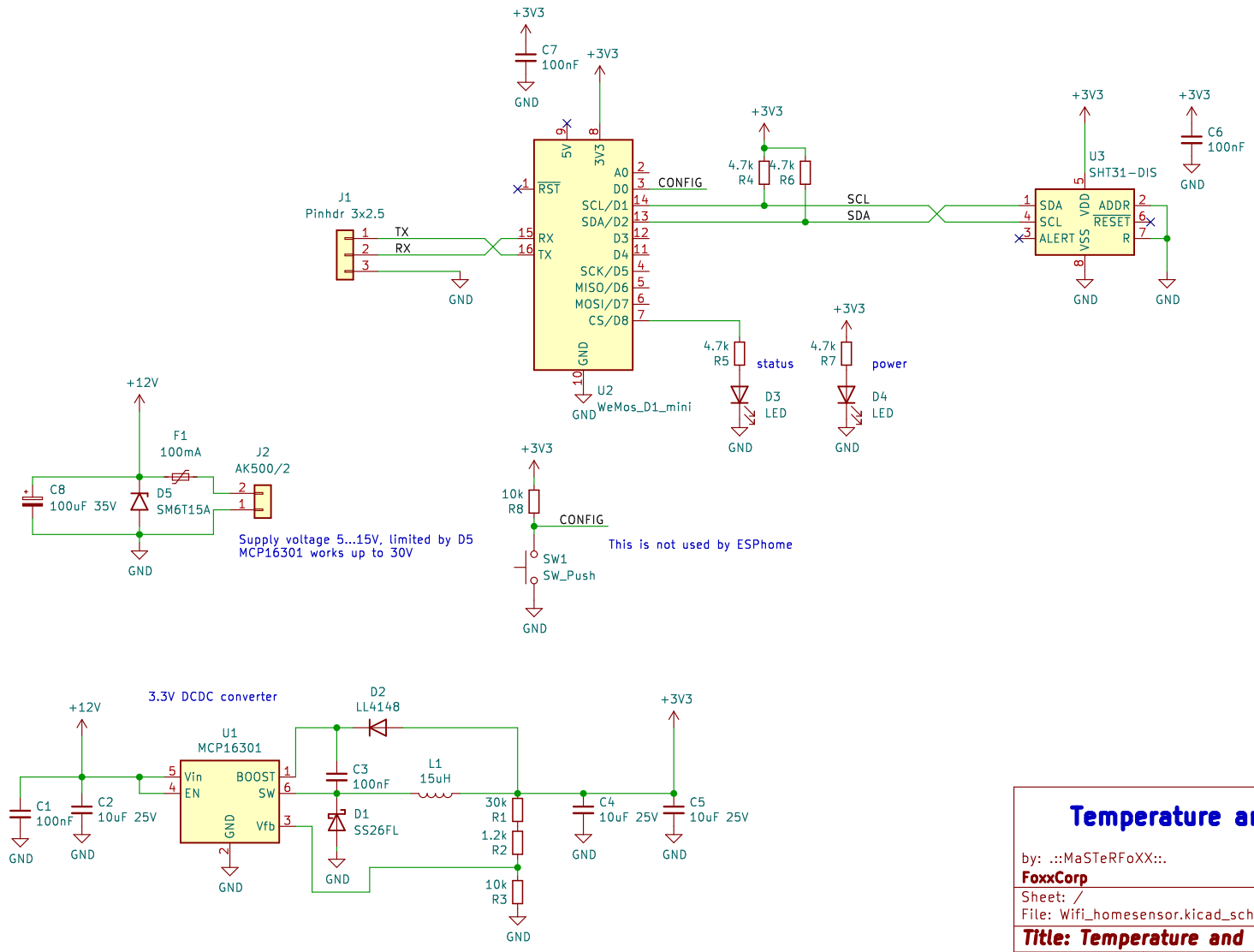

Temperature and humidity sensor for ESPhome

by: .::MaSTeRFoXX::.

FoxxCorp

Sheet: /

File: Wifi_homesensor.kicad_sch

Title: Temperature and humidity sensor for ESPhome

Size: A4	Date:	**Rev:**
KiCad E.D.A. kicad (6.0.7)		Id: 1/1