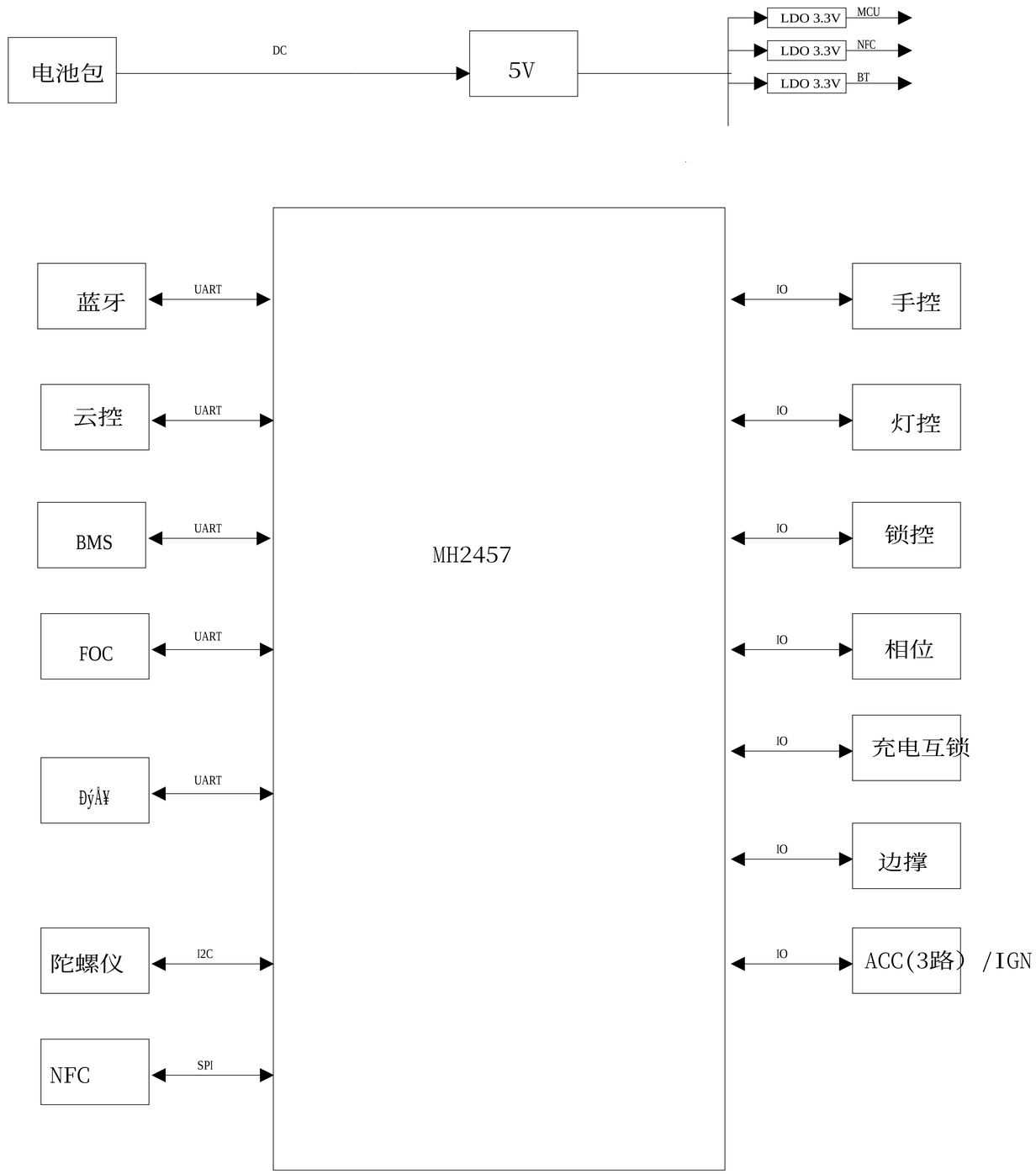

COMPANY: 北京牛电科技有限责任公司 Beijing niudian technology co. LTD				MODEL: <model>	Modified Date: 2025/7/15	
DRAWN	<Drawn By>	DATED	<Drawn Date>	TITLE: 00_BLOCK_DIAGRAM	VERSION: <Revision>	SHEET: 1 OF 18
CHECKED		DATED				

MCU

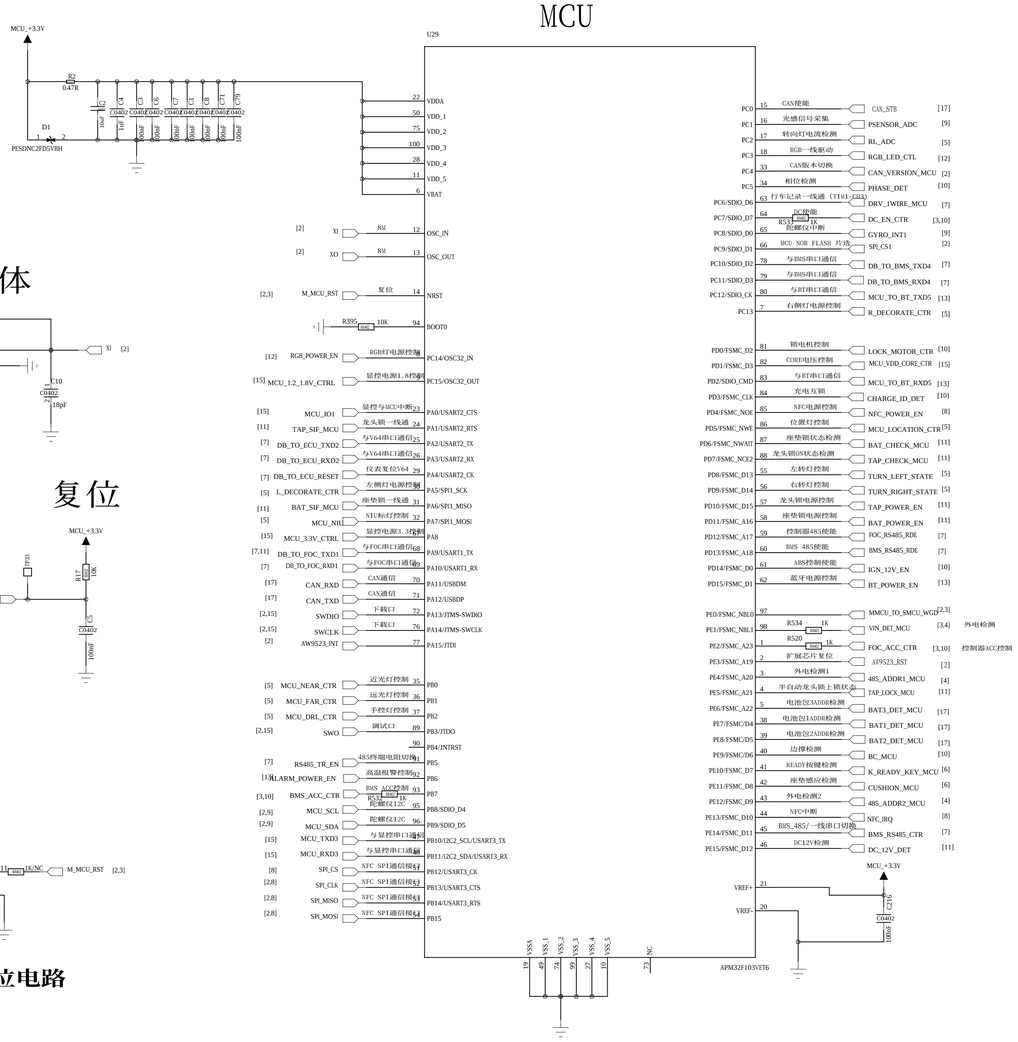

MCU供电

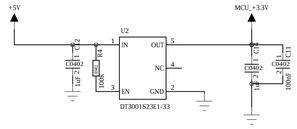

MCU DEBUG & DOWNLOAD

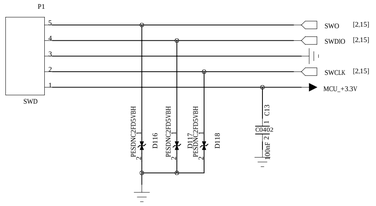

GPIO扩展

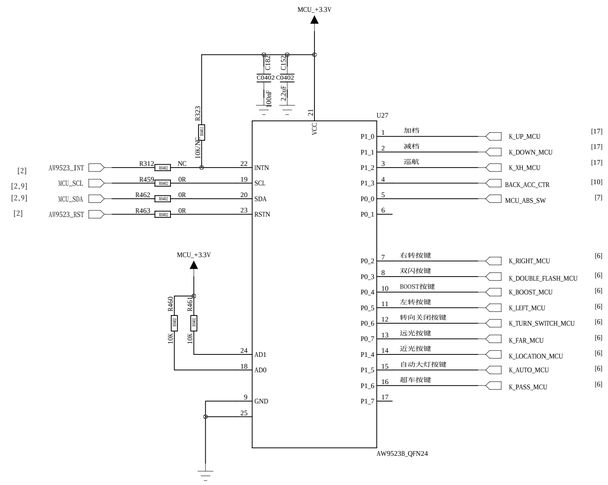

8M晶体

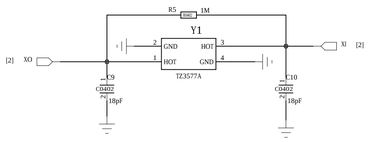

复位

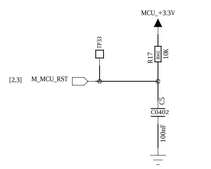

预留看门狗复位电路

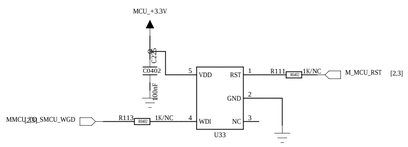

CAN版本切换

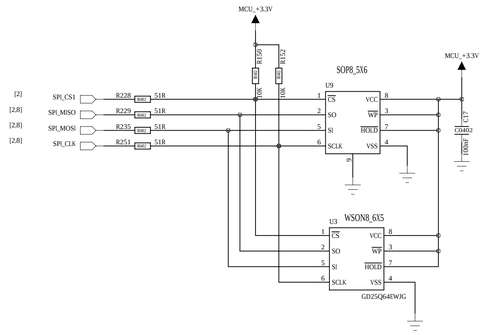

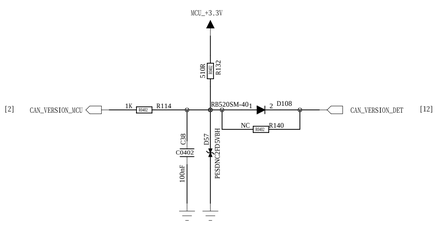

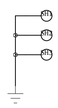

COMPANY: 北京牛电科技有限责任公司 Beijing niudian technology co. LTD				MODEL: <model>	Modified Date: 2025/7/15	
DRAWN	<Drawn By>	DATED	<Drawn Date>	TITLE: 01_MCU	VERSION: <Revision>	SHEET: 2 OF 18
CHECKED		DATED				

MCU

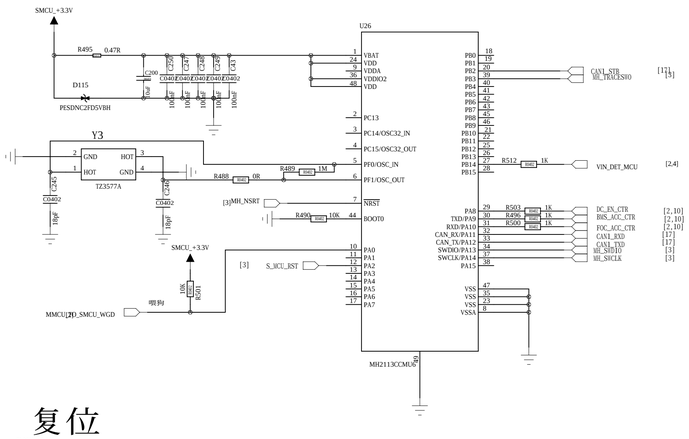

MCU供电

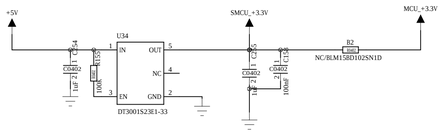

复位

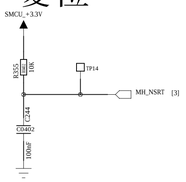

SMCU复位MMCU

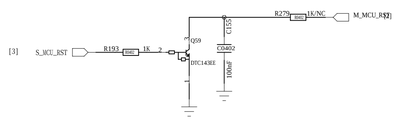

MCU DEBUG & DOWNLOAD

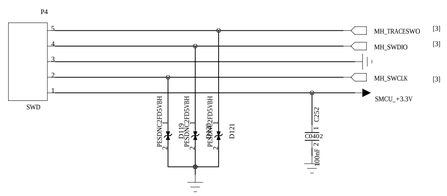

COMPANY: 北京牛电科技有限责任公司 Beijing niudian technology co. LTD				MODEL: <model>	Modified Date: 2025/7/15	
DRAWN	<Drawn By>	DATED	<Drawn Date>	TITLE: 02_MH113CCMU6	VERSION: <Revision>	SHEET: 3 OF 18
CHECKED		DATED				

48V-72V

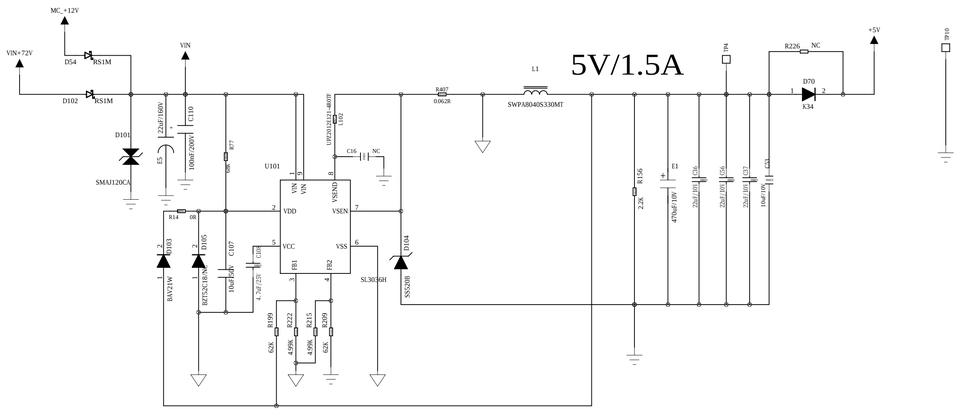

5V/1.5A

POWER Red

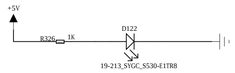

电池包在线检测

485 ADDR

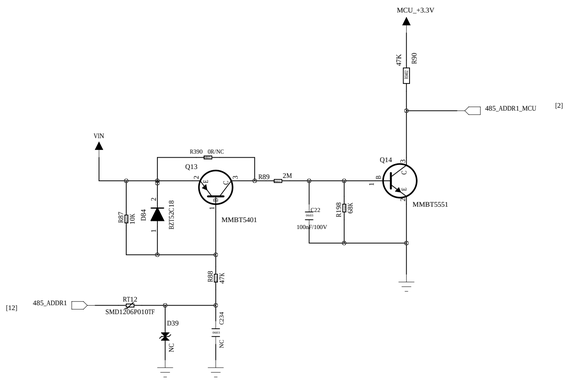

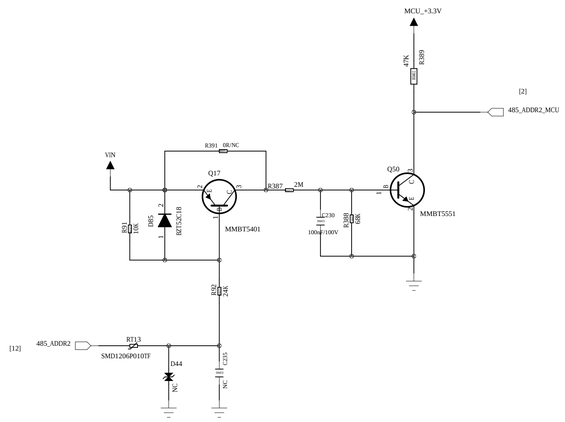

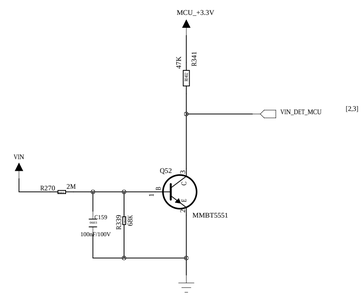

MARKD2MM MARK1 MARKD2MM MARK2 MARKD2MM MARK3
MARKD2MM MARK4 MARKD2MM MARK5 MARKD2MM MARK6

COMPANY: 北京牛电科技有限责任公司 Beijing niudian technology co. LTD				MODEL: <model>	Modified Date: 2025/7/15	
DRAWN	<Drawn By>	DATED	<Drawn Date>	TITLE: 03_POWER	VERSION: <Revision>	SHEET: 4 OF 18
CHECKED		DATED				

近光灯控制

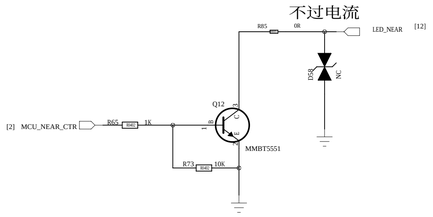

远光灯控制

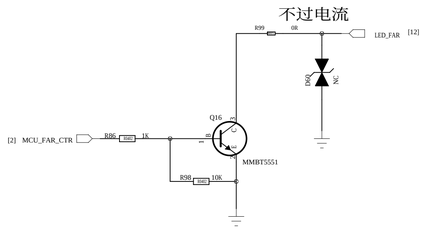

手控灯控制

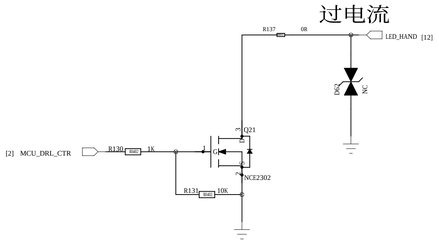

位置灯/牌照灯控制

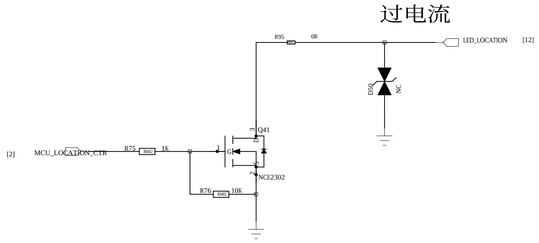

左装饰灯控制

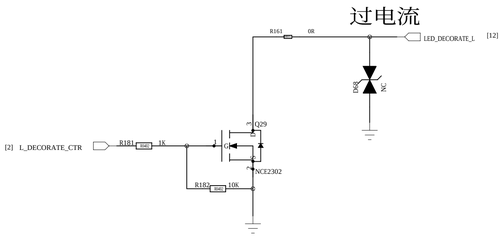

右装饰灯控制

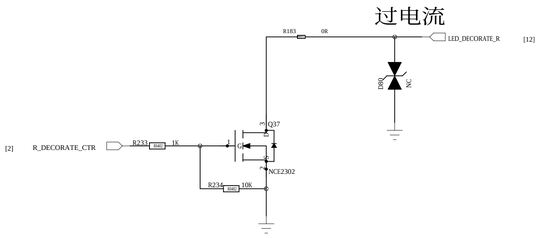

转向灯控制

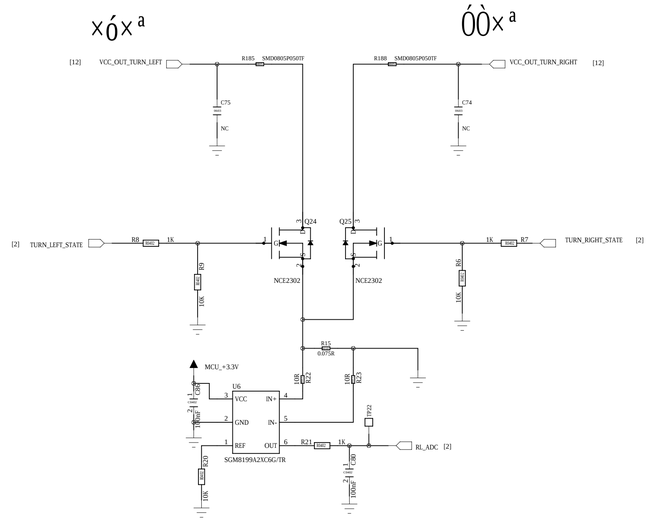

牛标灯控制

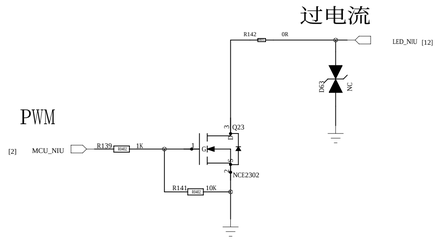

COMPANY: 北京牛电科技有限责任公司 Beijing niudian technology co. LTD				MODEL: <model>	Modified Date: 2025/7/15	
DRAWN	<Drawn By>	DATED	<Drawn Date>	TITLE: 04_LIGHT	VERSION: <Revision>	SHEET: 5 OF 18
CHECKED		DATED				

组合开关

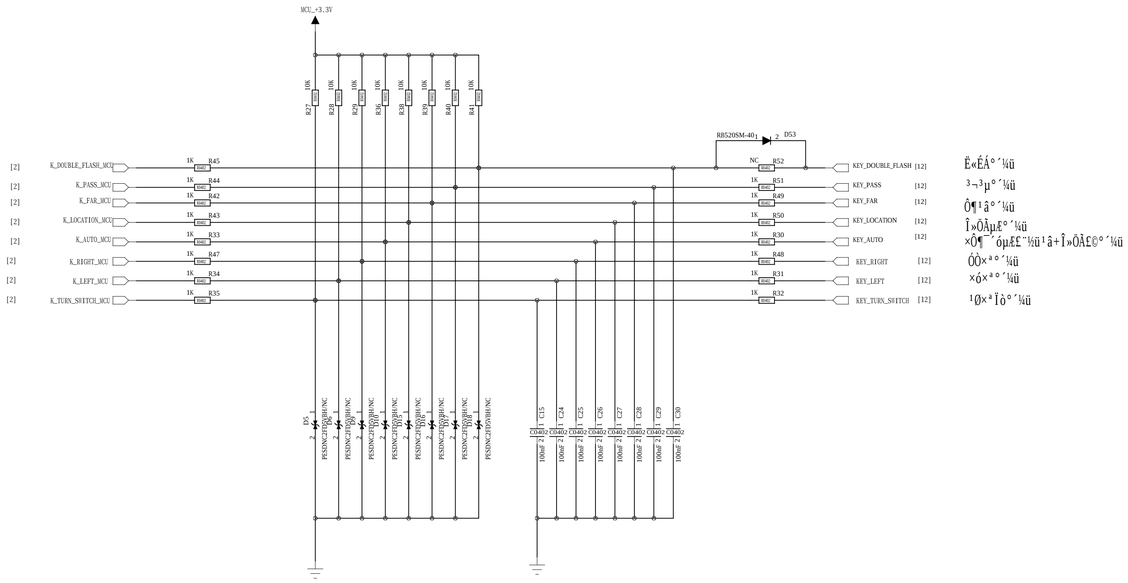

Ë«ËÁ°´¼ü
³¬³µ°´¼ü
Ô¶¹¹â°´¼ü
Î»ÔÅµÆ°´¼ü
×Ô¶¯´óµÆ£¨½ü¹â+Î»ÔÅ£©°´¼ü
ÓÒ×ª°´¼ü
×ó×ª°´¼ü
¹Ø×ªÏò°´¼ü

旋钮开关供电控制

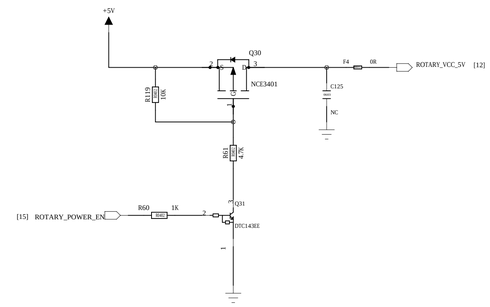

旋钮开关一线串口

旋钮开关发，仪表收

旋钮开关一线串口

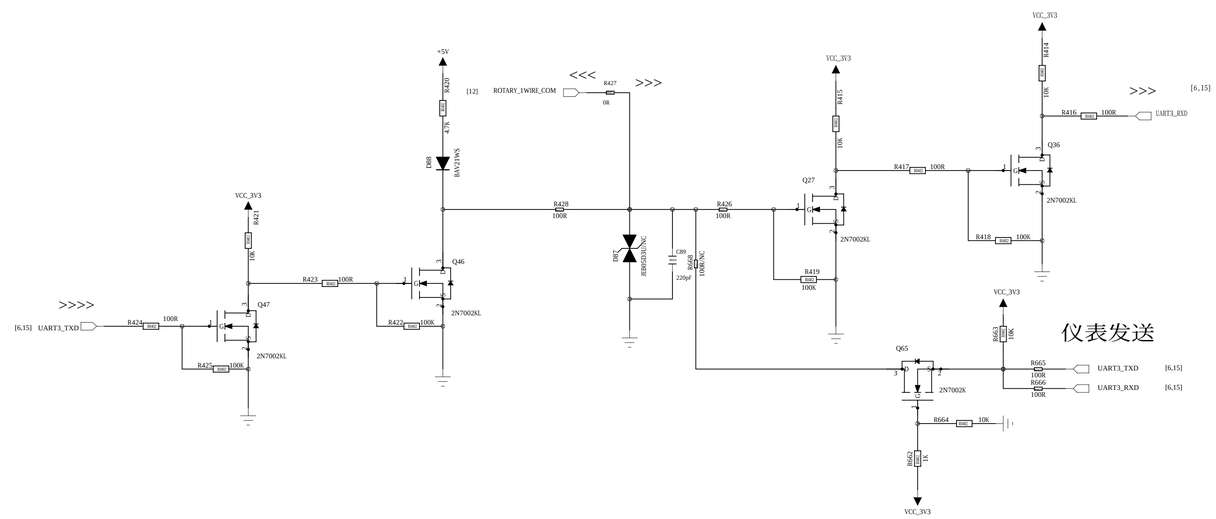

坐垫感应

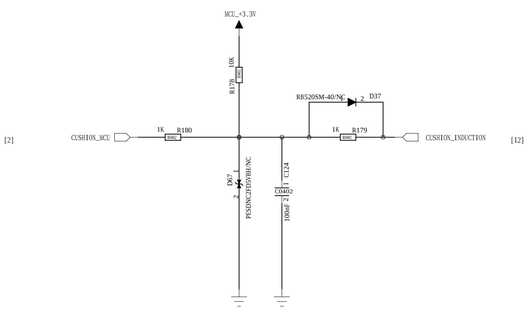

BOOST开关

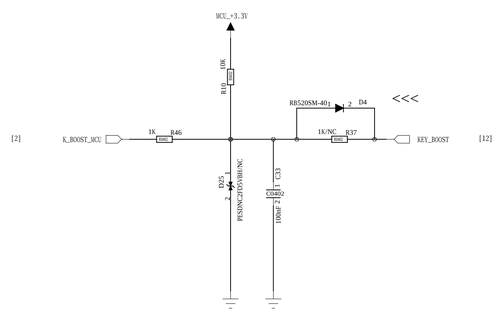

READY键

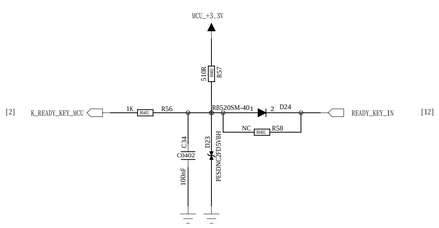

COMPANY: 北京牛电科技有限责任公司 Beijing niudian technology co. LTD				MODEL: <model>	Modified Date: 2025/7/15	
DRAWN	<Drawn By>	DATED	<Drawn Date>	TITLE: 05_KEY	VERSION: <Revision>	SHEET: 6 OF 18
CHECKED		DATED				

FOC一线串口电路

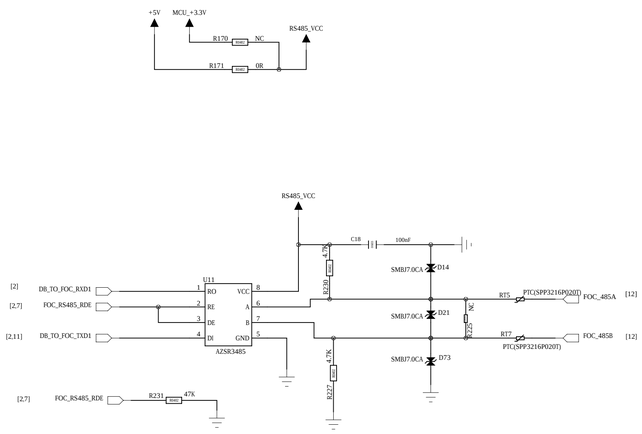

BMS一线串口电路/485电路

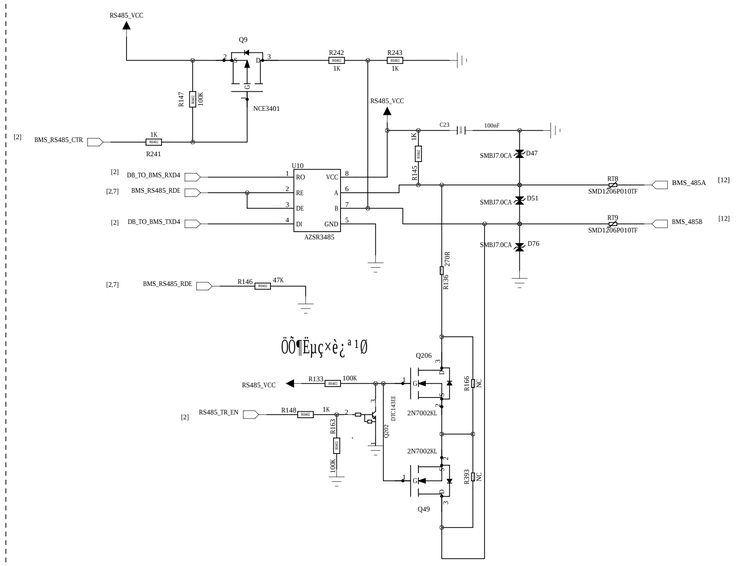

行车记录仪一线通

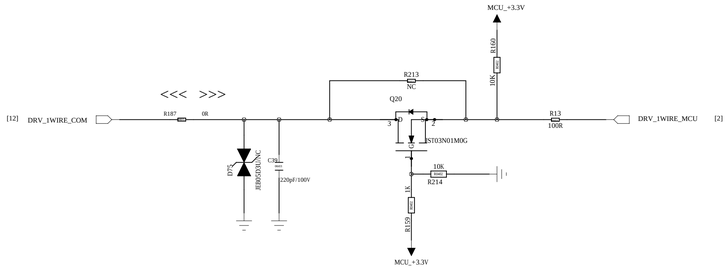

天眼RX

仪表发送

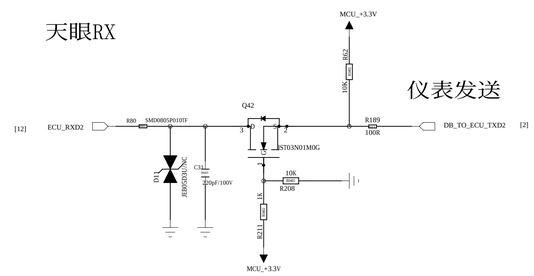

ABS开关

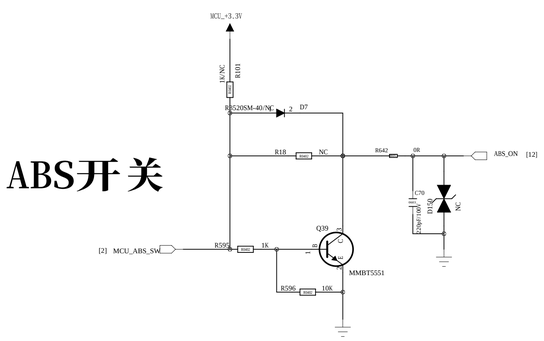

天眼TX

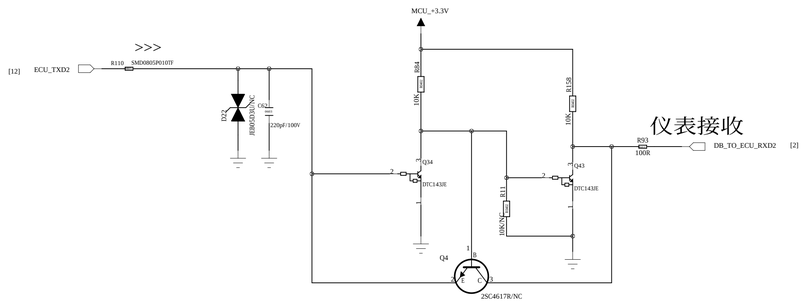

仪表接收

天眼复位

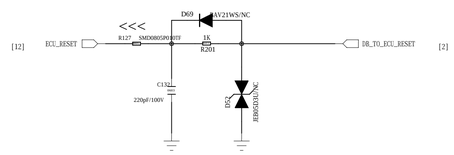

COMPANY: 北京牛电科技有限责任公司 Beijing niudian technology co. LTD				MODEL: <model>	Modified Date: 2025/7/15	
DRAWN	<Drawn By>	DATED	<Drawn Date>	TITLE: 06_SINGLE-WIRE-485-PORT	VERSION: <Revision>	SHEET: 7 OF 18
CHECKED		DATED				

Ô×Ô×Î¢YC5018/YC5118

¼æÈÝ¸´µõÎ¢FM17550/17580.Ô×Ì¶¢ª¤a´µµMH1608

FM17550/17580:R161 NC,R108 OR
YC5018/YC51180:R161 OR,R108 NC

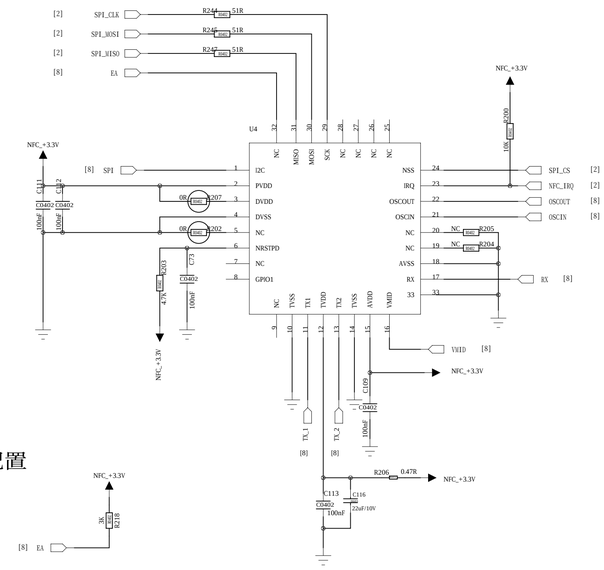

SPI接口配置

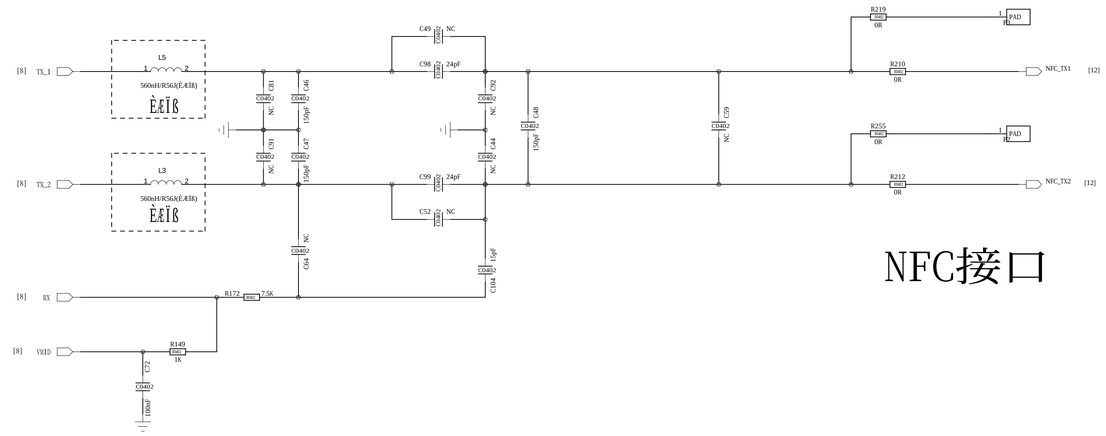

NFC接口

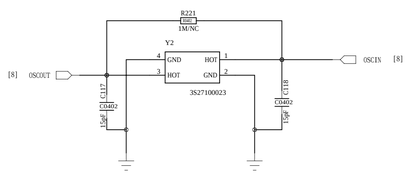

NFC¹©µç

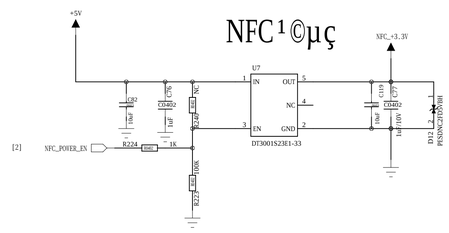

COMPANY: 北京牛电科技有限责任公司 Beijing niudian technology co. LTD				MODEL: <model>	Modified Date: 2025/7/15
DRAWN	<Drawn By>	DATED	<Drawn Date>	TITLE: 07_NFC	VERSION: <Revision> SHEET: 8 OF 18
CHECKED		DATED			

ÁùÖáGYRO SENSOR AND G-Sensor

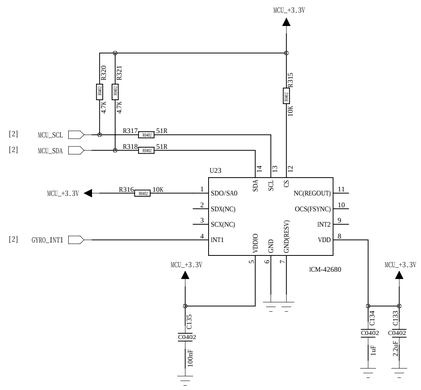

Psensor

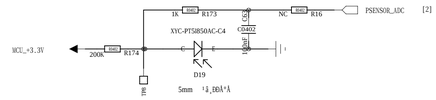

COMPANY: 北京牛电科技有限责任公司 Beijing niudian technology co. LTD				MODEL: <model>	Modified Date: 2025/7/15	
DRAWN	<Drawn By>	DATED	<Drawn Date>	TITLE: 08_SENSOR	VERSION: <Revision>	SHEET: 9 OF 18
CHECKED		DATED				

FOC_ACC

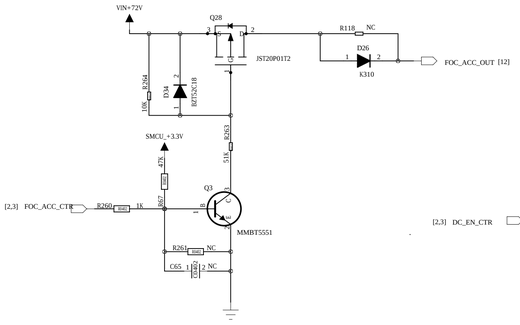

DC_EN

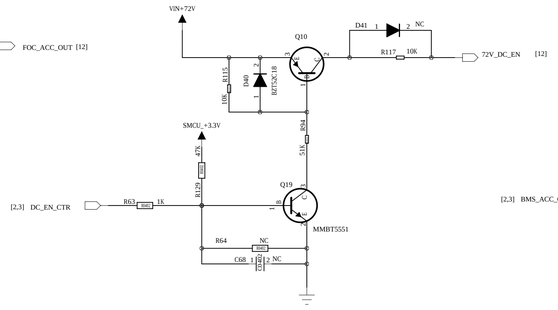

BMS_ACC

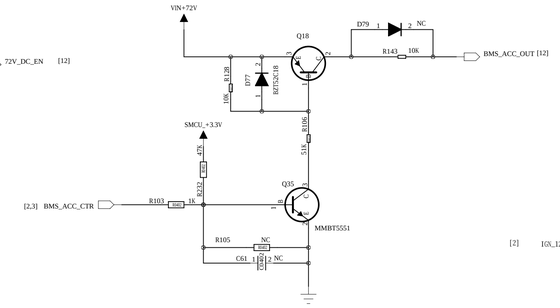

IGN点火信号

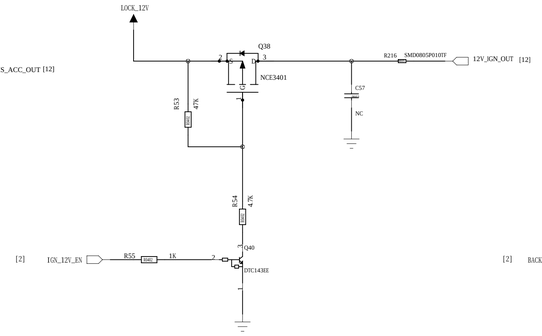

行车记录仪ACC

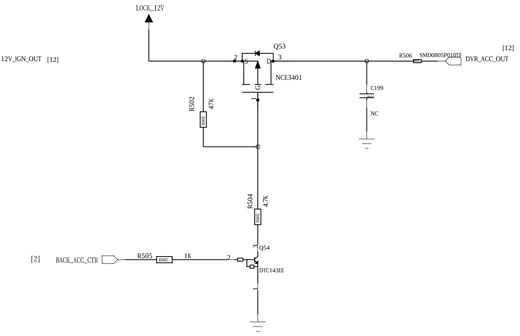

锁电机

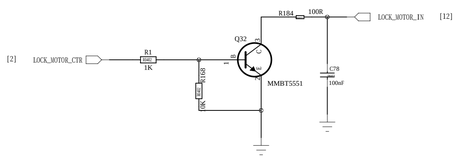

相位检测

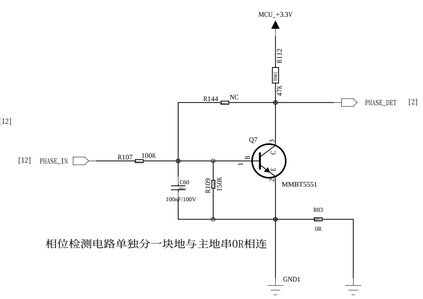

边撑信号

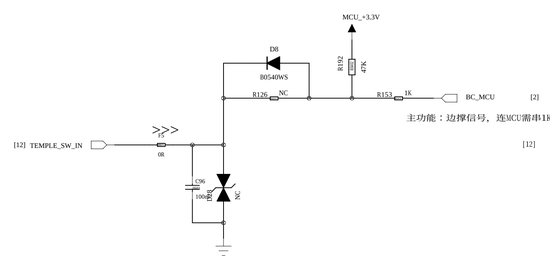

充电互锁

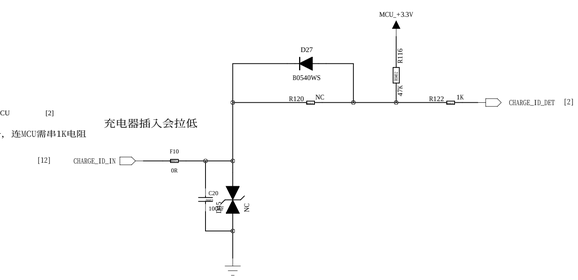

COMPANY: 北京牛电科技有限责任公司 Beijing niudian technology co. LTD				MODEL: <model>	Modified Date: 2025/7/15	
DRAWN	<Drawn By>	DATED	<Drawn Date>	TITLE: 09_ACC	VERSION: <Revision>	SHEET: 10OF 18
CHECKED		DATED				

电子龙头锁电源

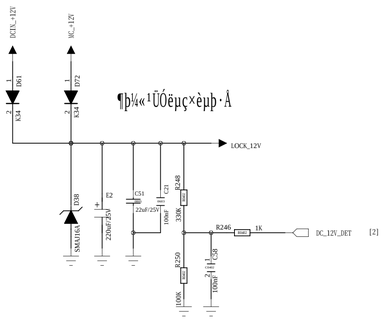

龙头锁一线通

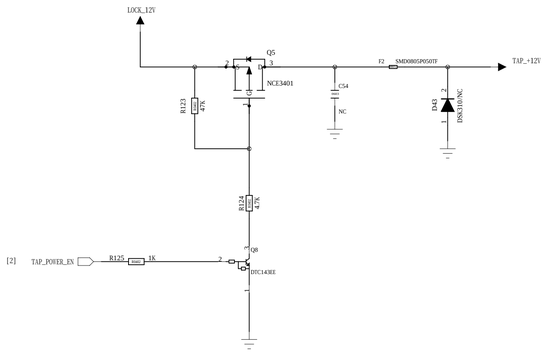

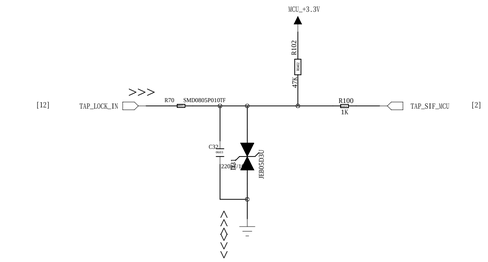

龙头锁状态反馈1（ON）

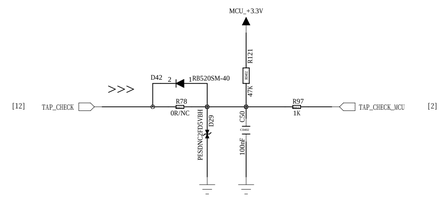

半自动龙头锁一线串口

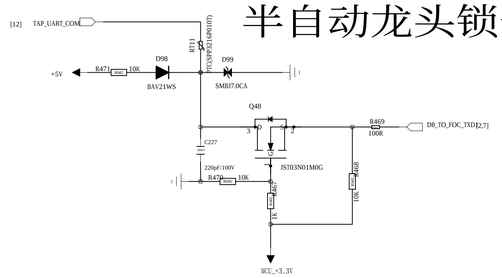

龙头锁状态反馈2(LOCK)

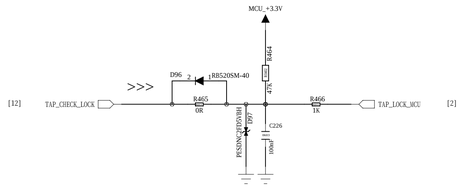

电池仓/电子坐垫锁电源

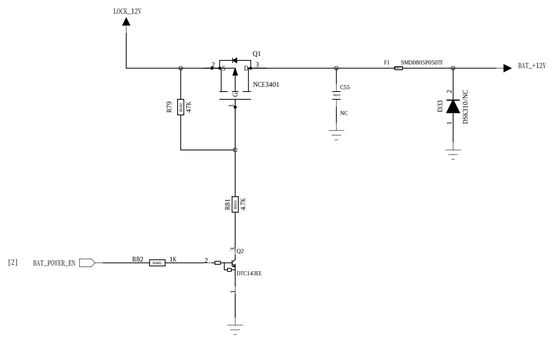

电池仓锁一线通

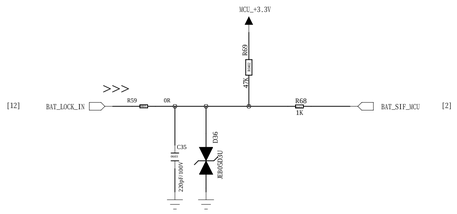

电池仓锁状态反馈

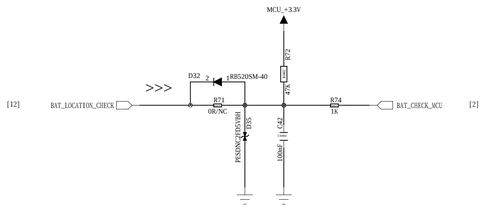

COMPANY: 北京牛电科技有限责任公司 Beijing niudian technology co. LTD				MODEL: <model>	Modified Date: 2025/7/15	
DRAWN	<Drawn By>	DATED	<Drawn Date>	TITLE: 10_LOCK	VERSION: <Revision>	SHEET: 11OF 18
CHECKED		DATED				

仪表接口A(20PIN)

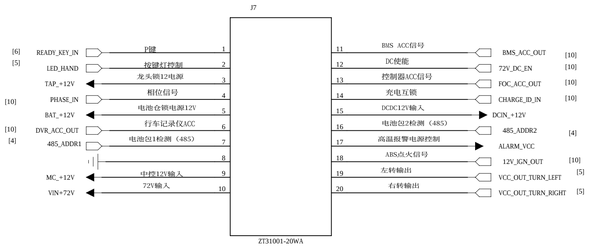

仪表接口B(18PIN)

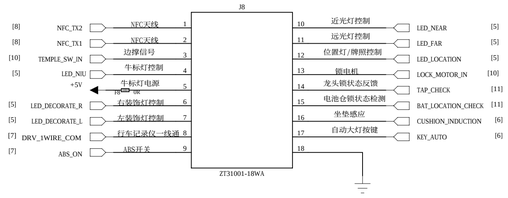

仪表接口C(24PIN)

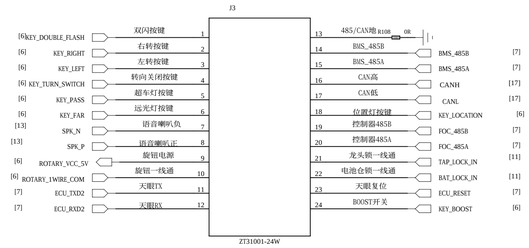

仪表接口D（10PIN）

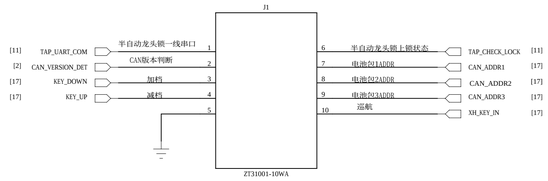

RGB灯电源控制

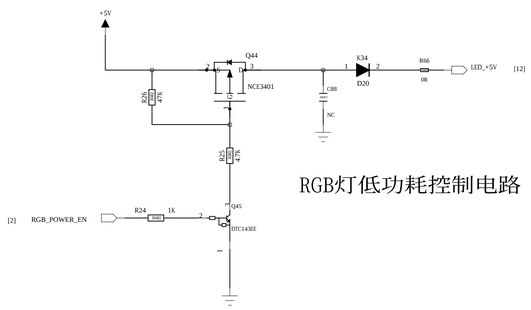

RGB灯低功耗控制电路

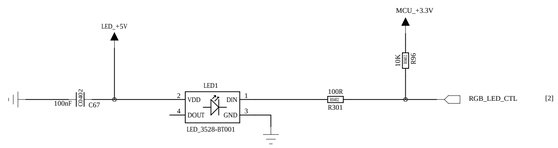

COMPANY: 北京牛电科技有限责任公司 Beijing niudian technology co. LTD				MODEL: <model>	Modified Date: 2025/7/15	
DRAWN	<Drawn By>	DATED	<Drawn Date>	TITLE: 11_CONNECT	VERSION: <Revision>	SHEET: 12OF 18
CHECKED		DATED				

BT MODULE

C22Q

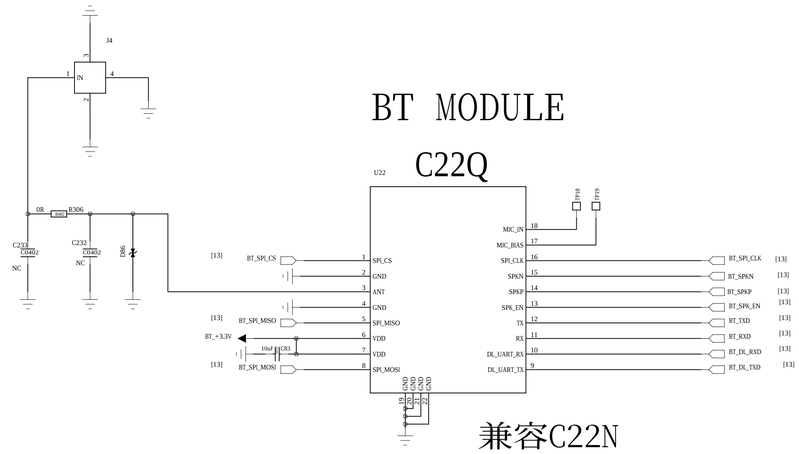

兼容C22N

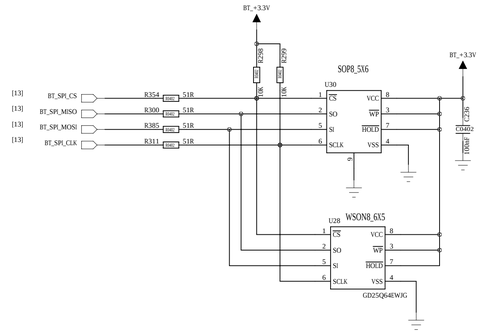

5W PA

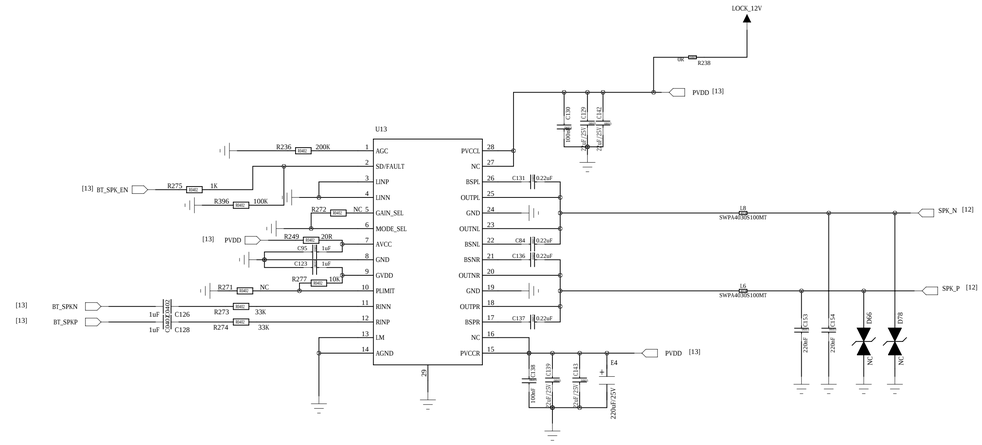

BT MODULE

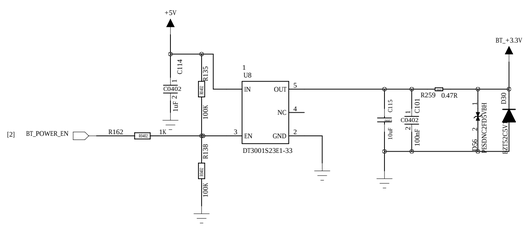

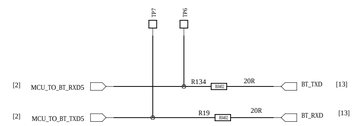

高温报警音控制

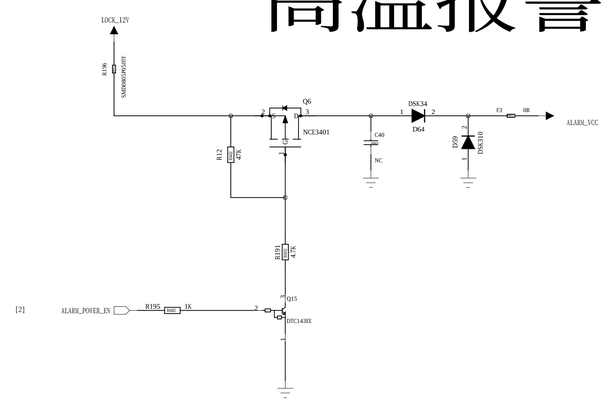

BT DEBUG & DOWNLOAD

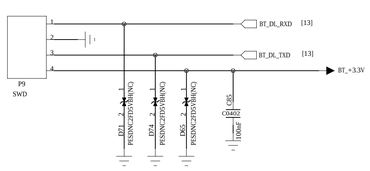

COMPANY: 北京牛电科技有限责任公司 Beijing niudian technology co. LTD				MODEL: <model>	Modified Date: 2025/7/15	
DRAWN	<Drawn By>	DATED	<Drawn Date>	TITLE: 12_BT	VERSION: <Revision>	SHEET: 13OF 18
CHECKED		DATED				

7' LCM/BL/DSI

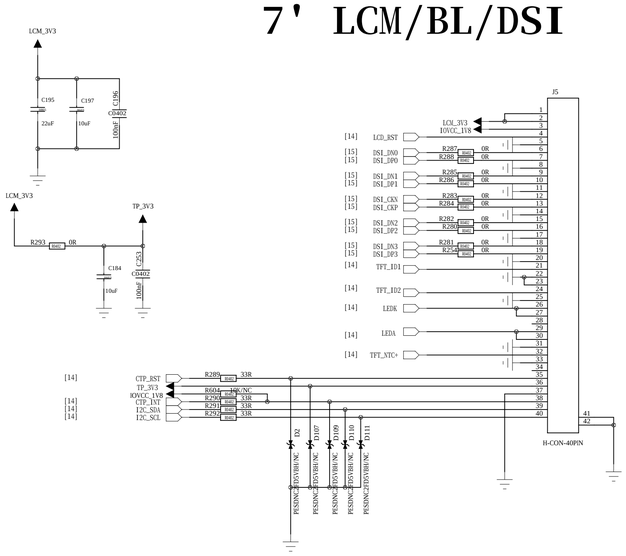

液晶供电

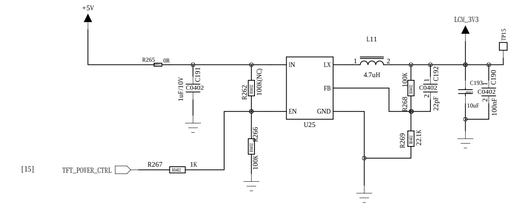

背光驱动

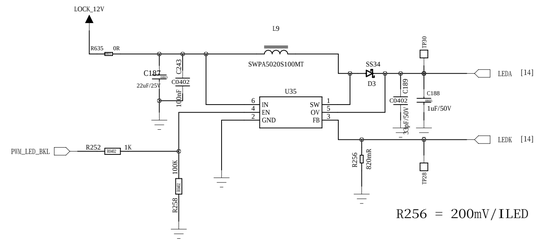

LDO-1.8V有上电时序要求

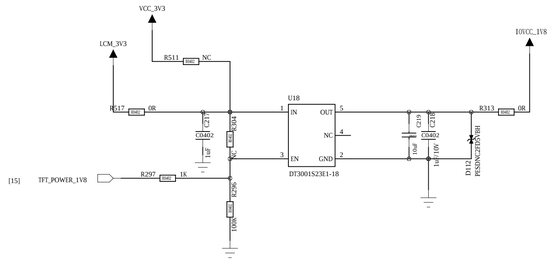

液晶背光电压:21V(TYP)电流:240mA

复位

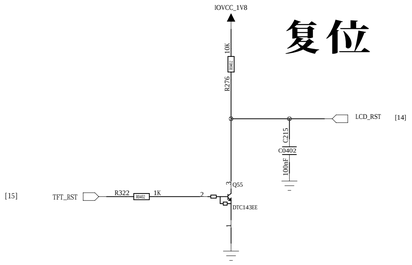

ID1

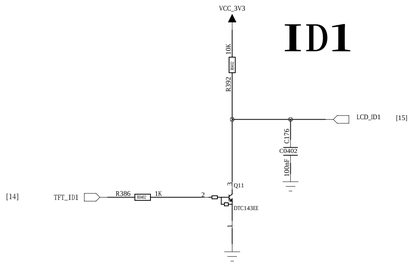

电平转换

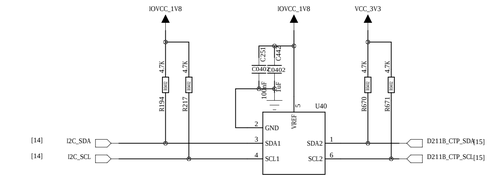

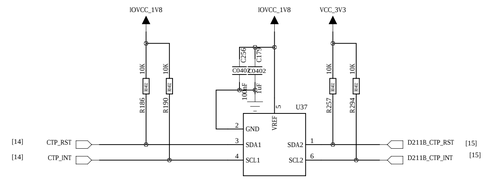

显示屏温度侦测

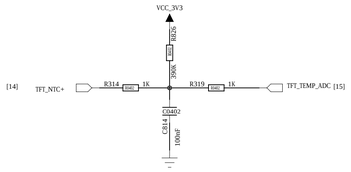

ID2

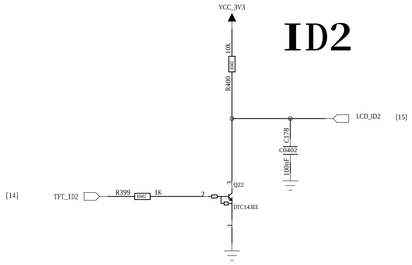

COMPANY: 北京牛电科技有限责任公司 Beijing niudian technology co. LTD				MODEL: <model>	Modified Date: 2025/7/15	
DRAWN	<Drawn By>	DATED	<Drawn Date>	TITLE: 13_TFT	VERSION: <Revision>	SHEET: 14OF 18
CHECKED		DATED				

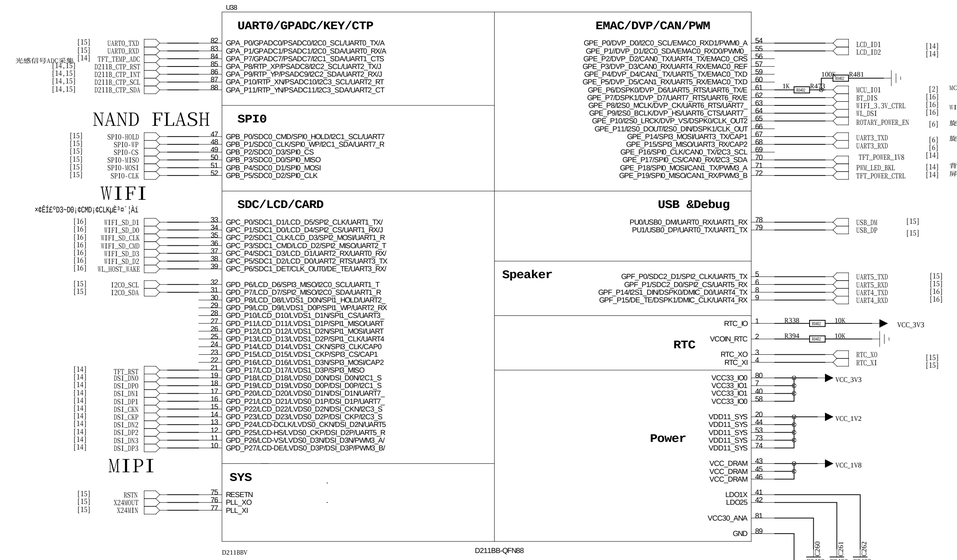

CPU底部GND焊盘加强散热

QSPI NAND注意等长约束

UART0下载调试口

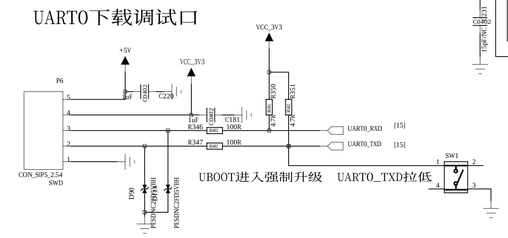

UBOOT进入强制升级 UART0_TXD拉低

RTC 32K时钟

使用CPU内置RTC功能，外置晶振

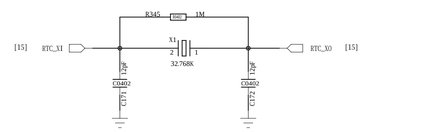

复位

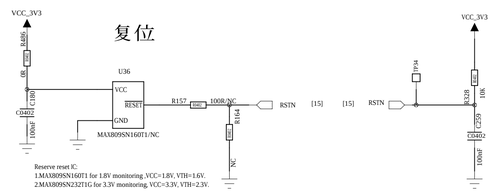

JTAG

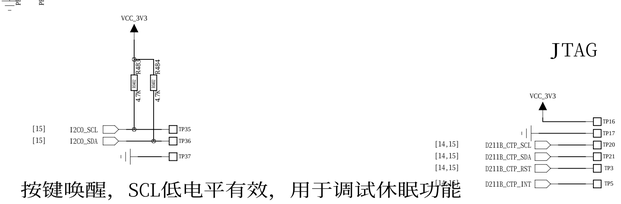

按键唤醒，SCL低电平有效，用于调试休眠功能

24M时钟

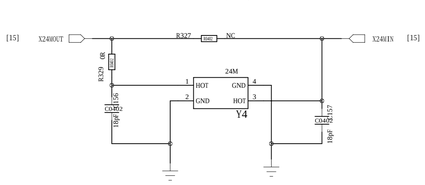

与主控MCU通信

串口通信

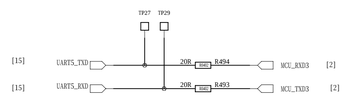

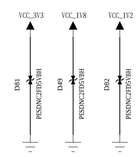

1.2V for Core 走线宽度达到1A过流能力

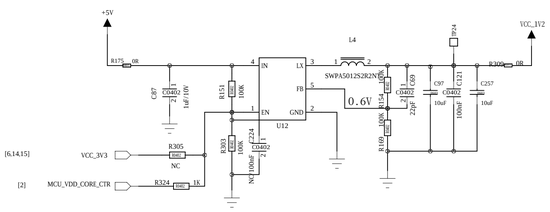

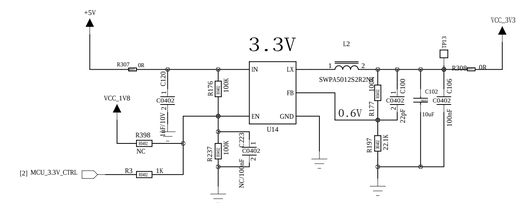

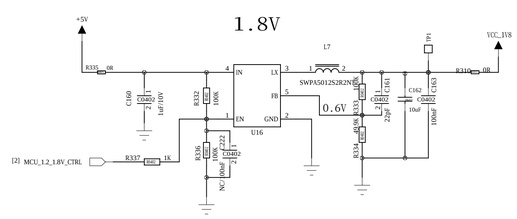

USB TYPE-C

外挂U盘来更新QM102D程序

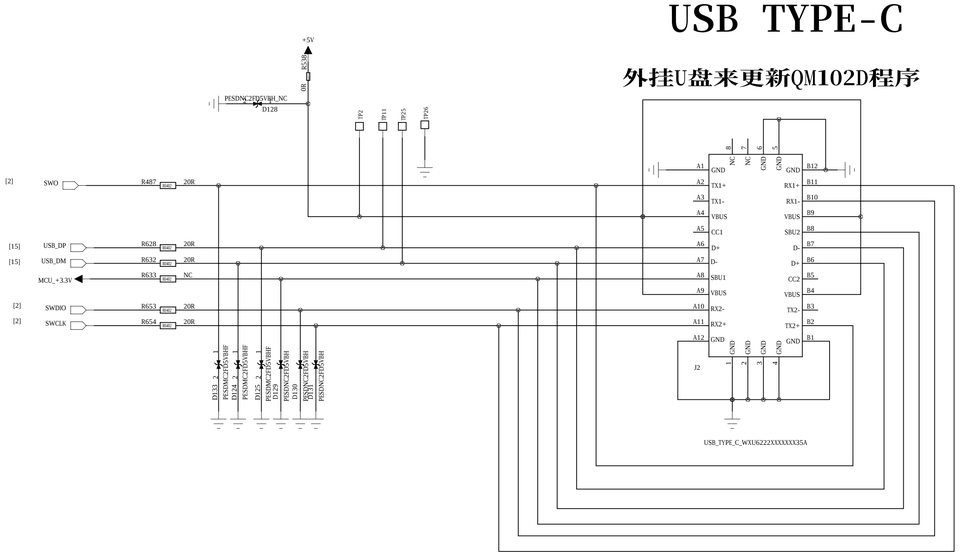

COMPANY: 北京牛电科技有限责任公司 Beijing niudian technology co. LTD			MODEL: <model>	Modified Date: 2025/7/15		
DRAWN	<Drawn By>	DATED	<Drawn Date>	TITLE: 14_D211B	VERSION: <Revision>	SHEET: 15OF 18
CHECKED		DATED				

WIFI供电

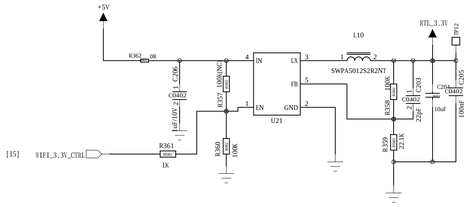

WIFI 模组

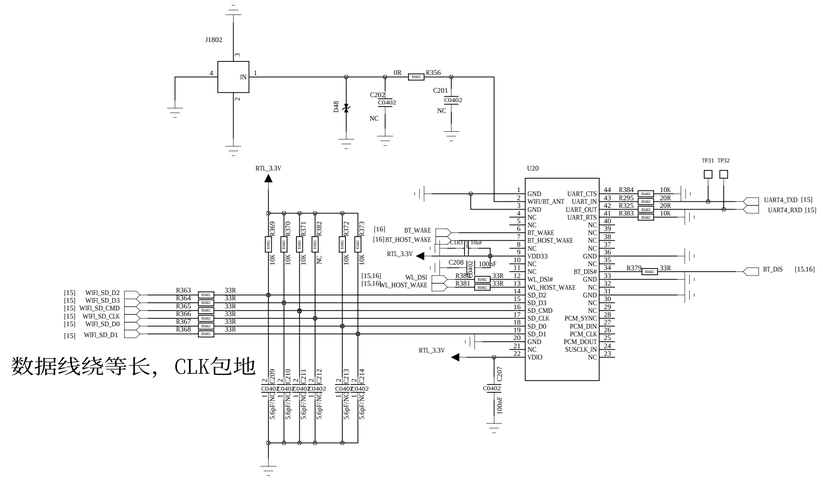

数据线绕等长，CLK包地

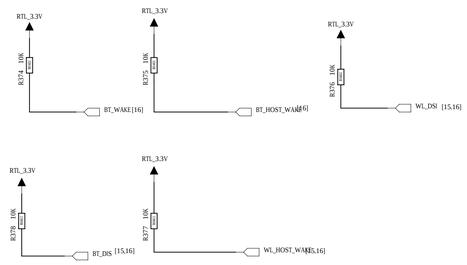

COMPANY: 北京牛电科技有限责任公司 Beijing niudian technology co. LTD				MODEL: <model>	Modified Date: 2025/7/15	
DRAWN	<Drawn By>	DATED	<Drawn Date>	TITLE: 15_WIFI	VERSION: <Revision>	SHEET: 16OF 18
CHECKED		DATED				

CAN BUS PORT

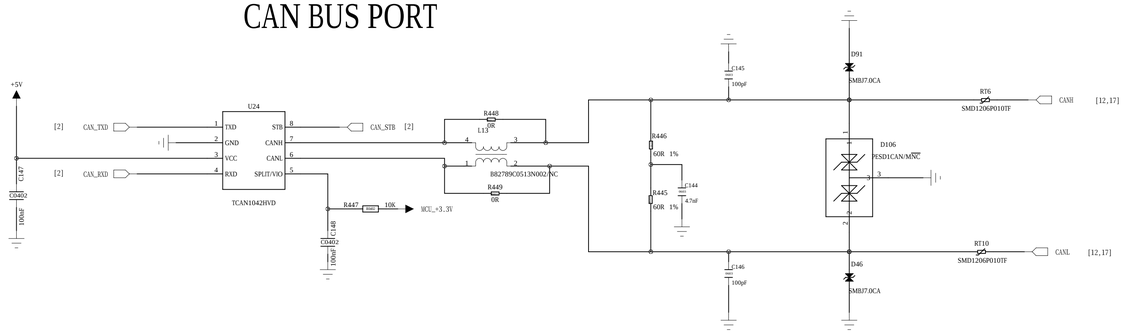

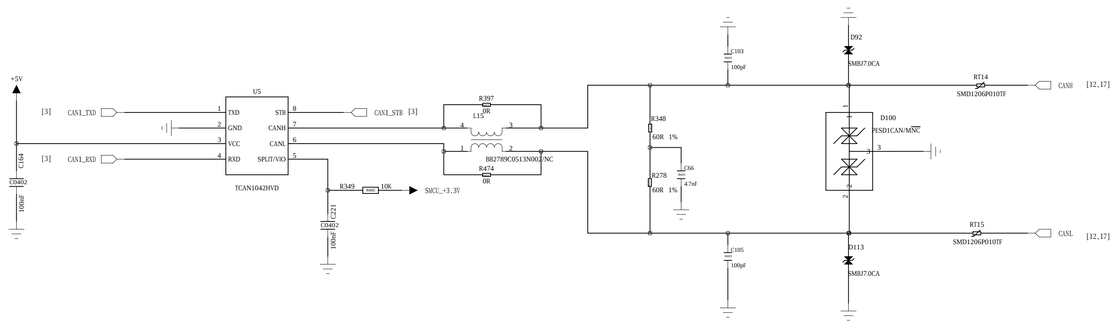

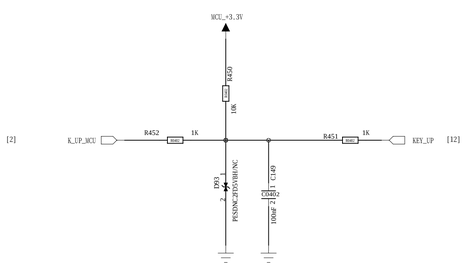

CAN加档走通信

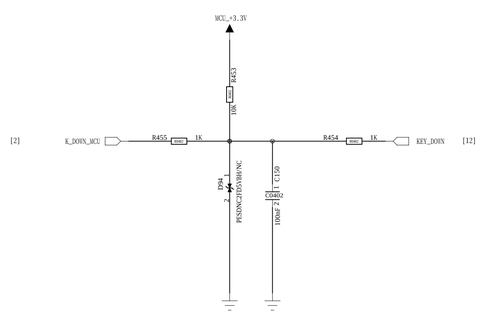

CAN减档走通信

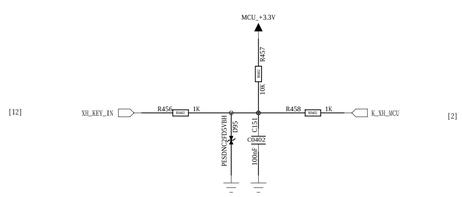

定速巡航走通信

充电器插入检测不进仪表

µç³Ø°ü1½ÓÈë¼ì²â

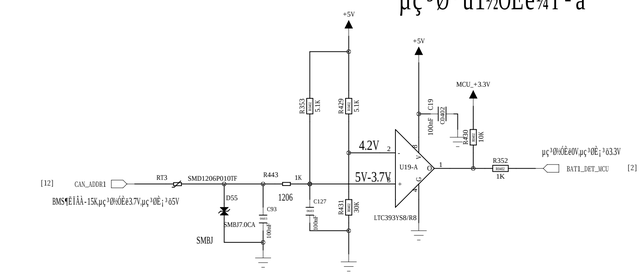

µç³Ø°ü2½ÓÈë¼ì²â

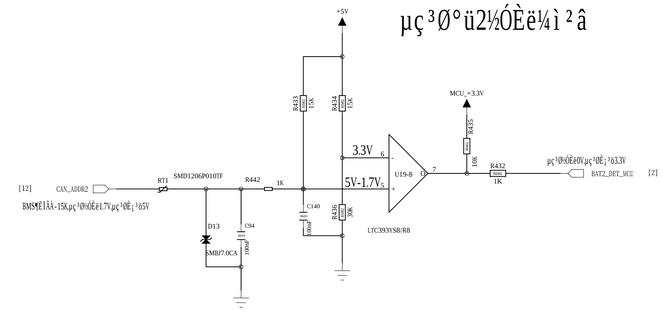

µç³Ø°ü3½ÓÈë¼ì²â

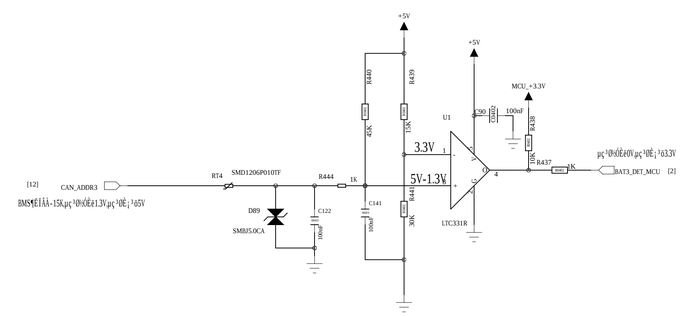

COMPANY: 北京牛电科技有限责任公司 Beijing niudian technology co. LTD				MODEL: <model>	Modified Date: 2025/7/15	
DRAWN	<Drawn By>	DATED	<Drawn Date>	TITLE: 16_CAN	VERSION: <Revision>	SHEET: 17OF 18
CHECKED		DATED				

V0.1

初始版

COMPANY: 北京牛电科技有限责任公司 Beijing niudian technology co. LTD				MODEL: <model>		Modified Date: 2025/7/15	
DRAWN	<Drawn By>	DATED	<Drawn Date>	TITLE: 17_CHANGE_LIST		VERSION: <Revision>	SHEET: 18OF 18
CHECKED		DATED					