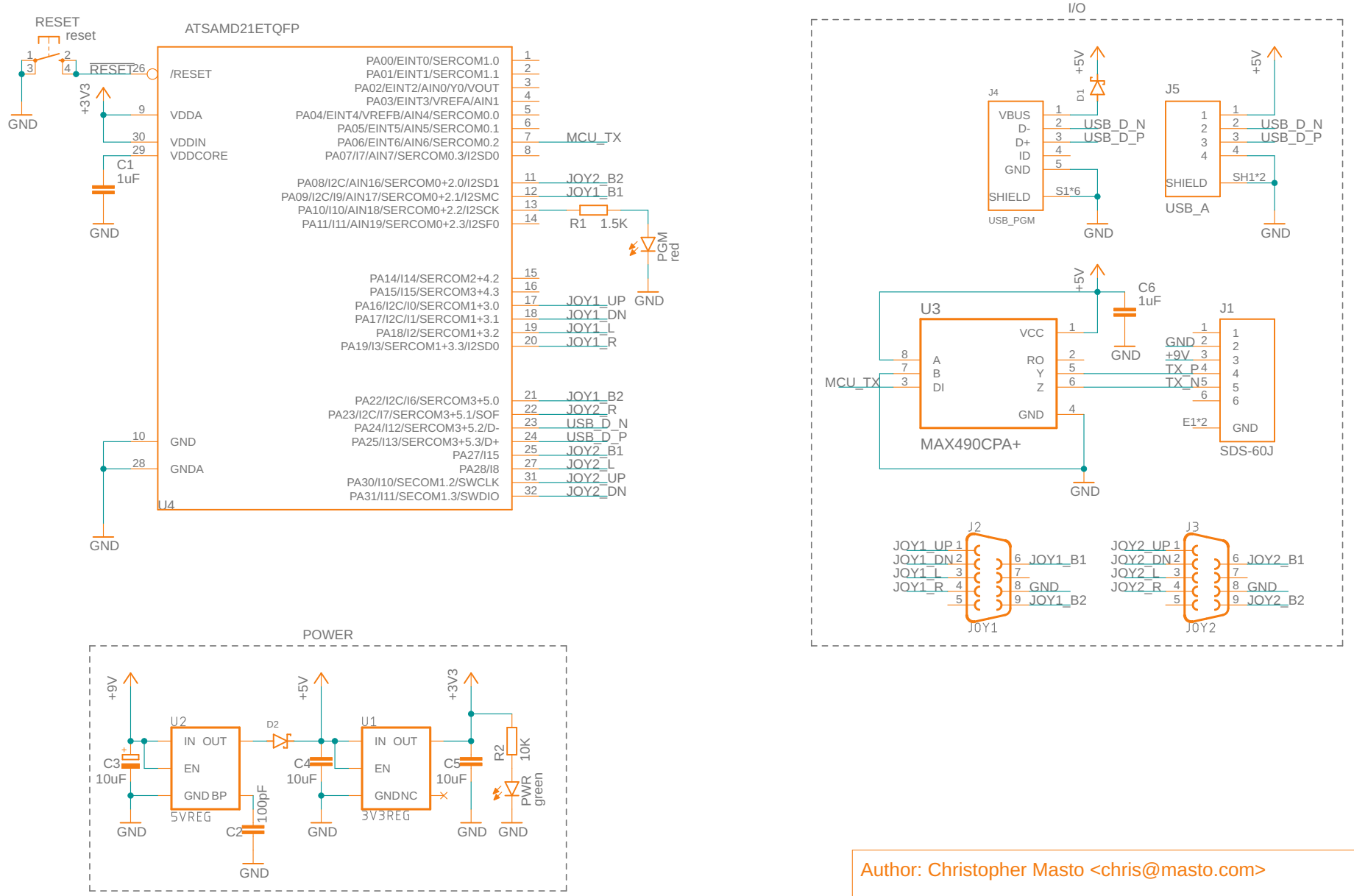

Author: Christopher Masto <chris@masto.com>

TITLE: USB to NABU Converter v37

Document Number:

REV:

Date: 5/16/23 10:17 AM

Sheet: 1/1