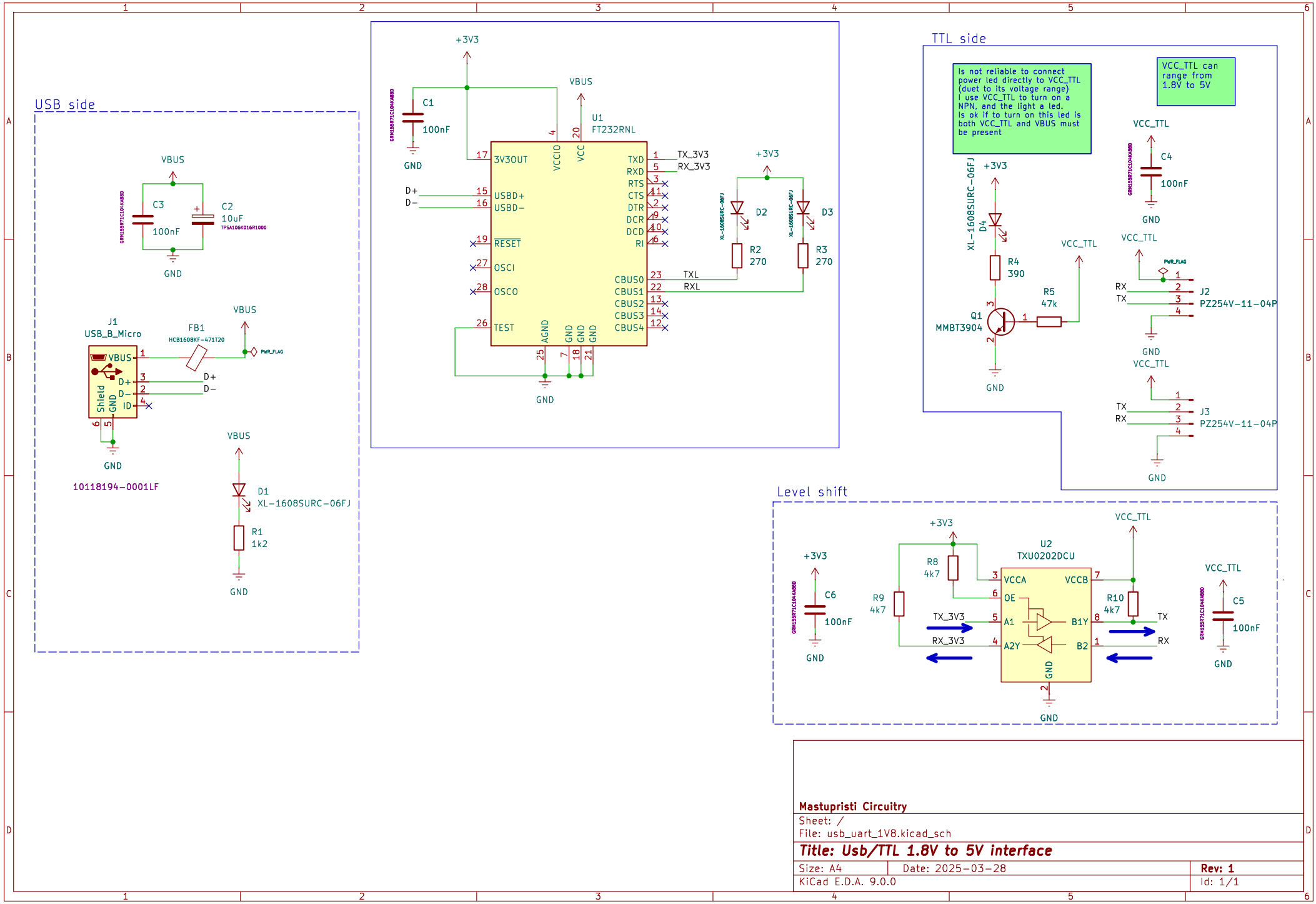

Mastupristi Circuitry

Sheet: /

File: usb_uart_1V8.kicad_sch

Title: Usb/TTL 1.8V to 5V interface

Size: A4	Date: 2025-03-28	**Rev: 1**
KiCad E.D.A. 9.0.0		Id: 1/1