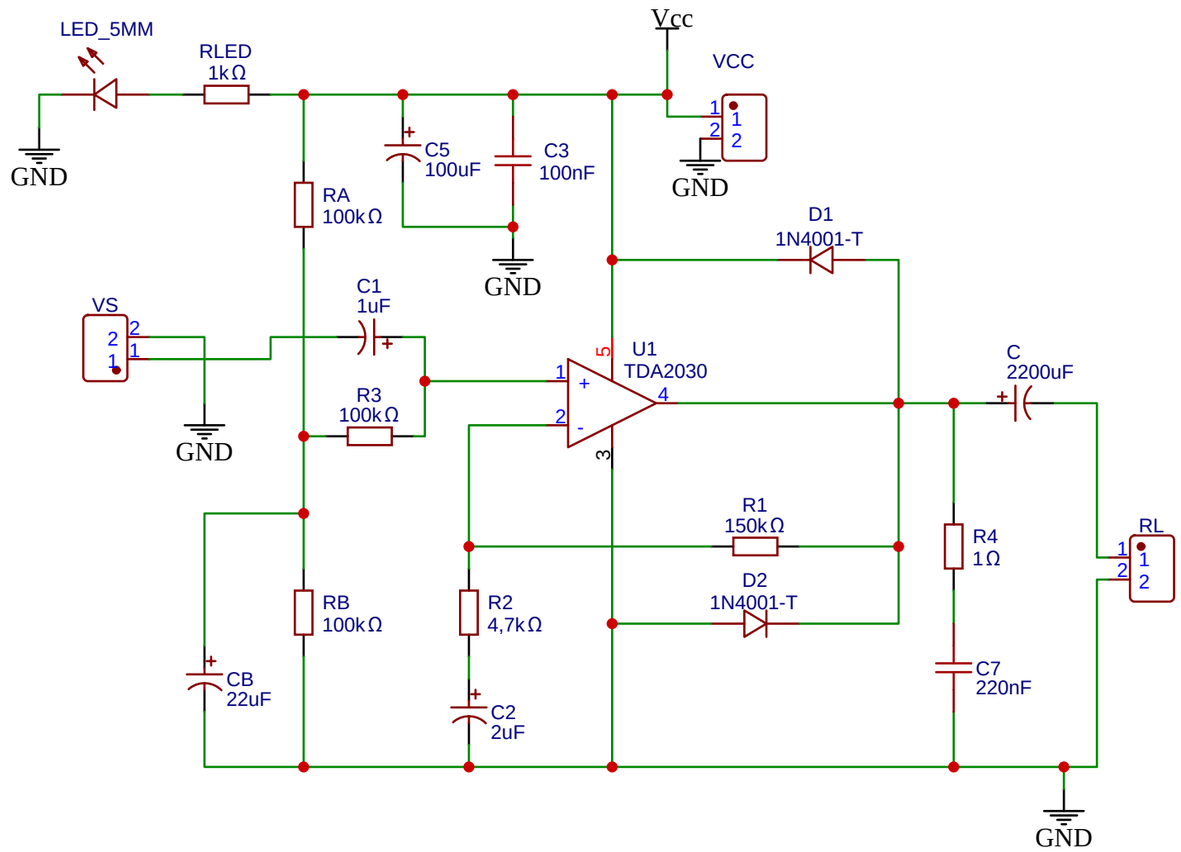

TITLE: Amplifier board		REV: 1.0
	Company: Your Company	Sheet: 1/1
	Date: 2024-06-24 Drawn By: mateojbuteler	