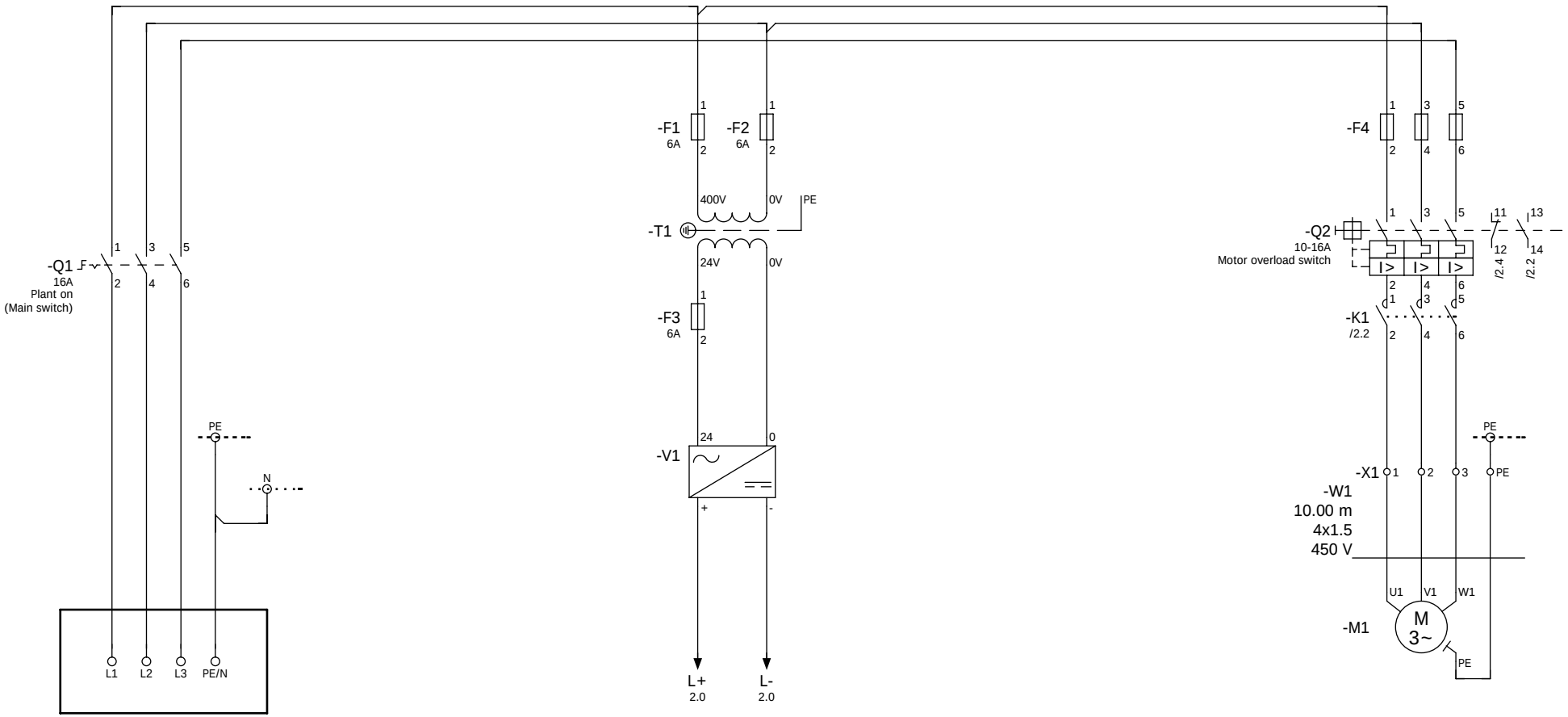

Power supply 3ph / 400V

Distribution 24 V DC

Conveyor belt

-X1 = Terminal strip motor

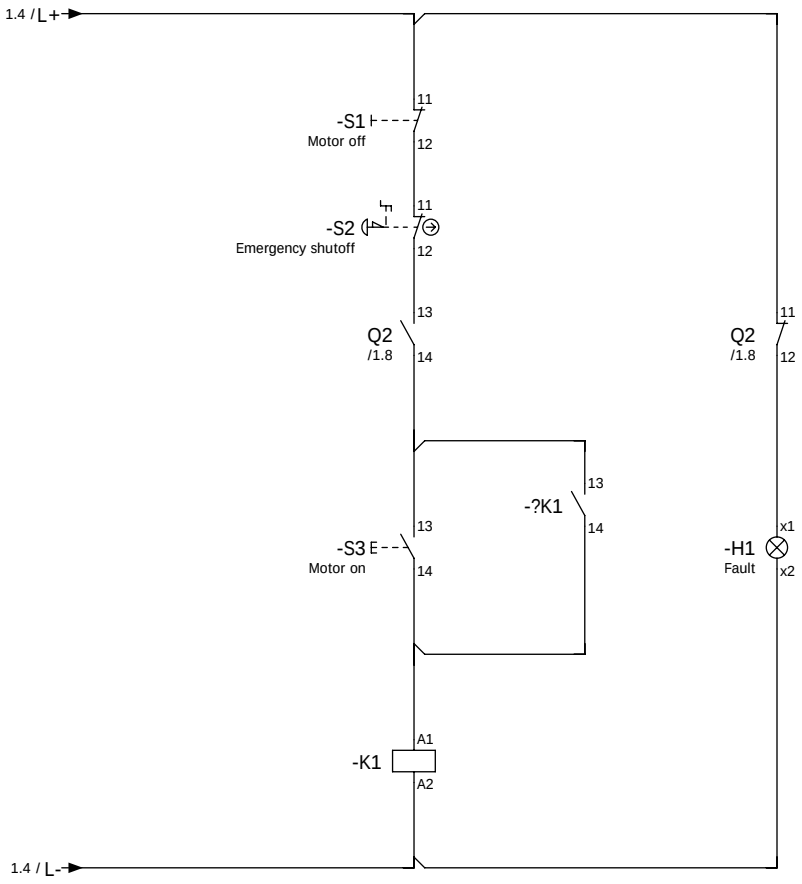

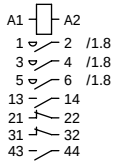

			Date	1.4.2008	EPLAN	EPLAN Software & Service GmbH & Co. KG	Control circuit		= ANL	
			Ed. by	Mladen					+ SCP	
			Appr		Basic project with IEC identifier structure			IEC-BAS001	Page	2
Modification	Date	Name	Original		Replacement for	Replaced by			Pg	7