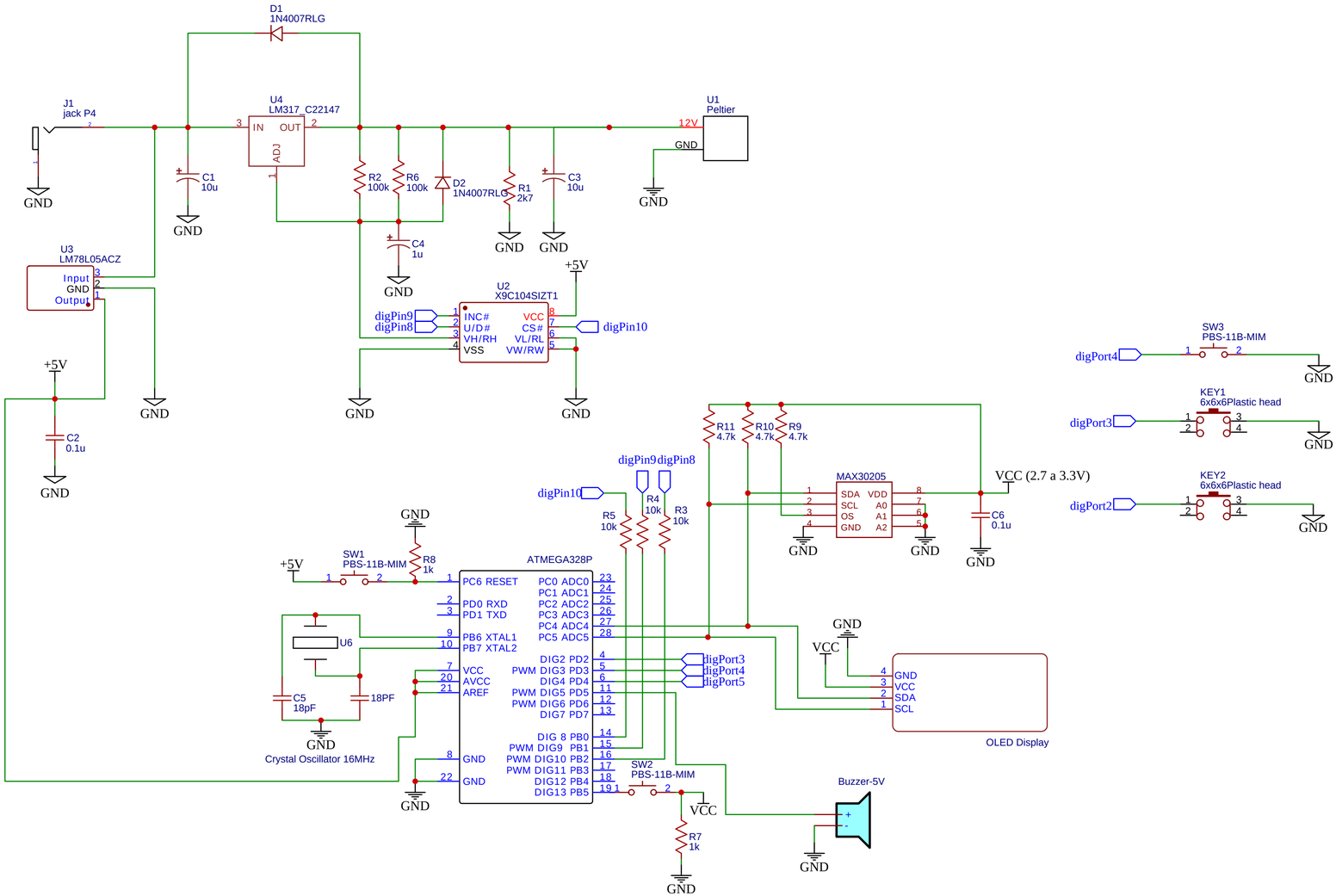

TITLE: Potentiometer controller circuit		REV: 1.0
EasyEDA	Company: EletronJun	Sheet: 1/1
	Date: 2020-03-27 Drawn By: bruna_eletronjun	